2007
Villager 6 and 8
Illustrated Part List

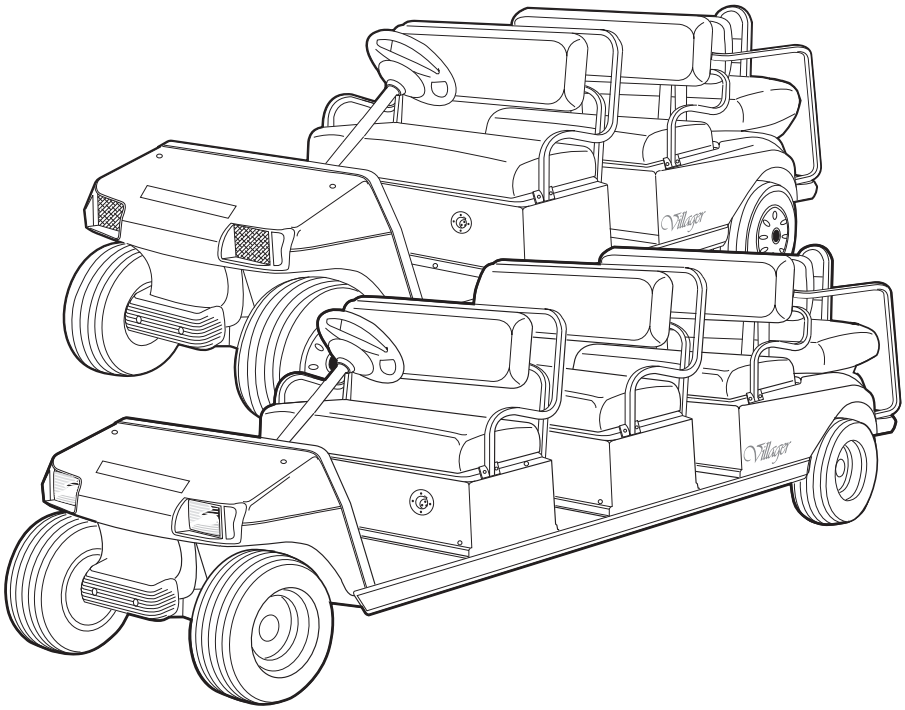

Gasoline and Electric Vehicles

Manual Number 103209025
Edition Code 1206G0310F

USING THE ILLUSTRATED PARTS LIST

⚠ WARNING

- **This manual is to be used only for identification and ordering of service parts. Be sure to read and use the maintenance and service manual before attempting any vehicle repairs.**

This manual covers all Villager 6 and 8 vehicles built during the 2007 model year.

The manual is divided into sections. Note that there are two or three flags on the outside edge of each page. The first flag contains the section number of which that page is a part. The other flag (or flags) contains the letter G or E, signifying that the page pertains to the electric or gasoline vehicles only.

Use the Table of Contents to find the sections and pages that contain the parts and assemblies you seek. The Table of Contents lists section numbers, and under them, the individual page titles and numbers to be found in that section. The index can be used to find specific parts and assemblies. The index is divided into numerical and alphabetical listings with the page numbers in italic text.

There is a two-page spread for each individual page title in the Table of Contents. On the left-hand page is an illustration showing the parts in their relative positions; the parts are each tagged with an item number in a balloon. The right-hand page is the parts list page, and gives the page title at the top, then the item numbers (corresponding to the numbers on the illustration), part descriptions, and quantity of parts used.

Note that a part description may be indented. This indention corresponds to a parts assembly level indicated by the numbers 1, 2, 3, and 4 at the top left corner of the parts description area of the parts list page. A part that is indented to *level 2* is a component of the *level 1* part (assembly) that it is listed under. A *level 3* part is a component of the *level 2* part that it is listed under, and a *level 4* part is a component of the *level 3* part preceding it. In each case, the part quantity given for a level 2, 3, or 4 part *is the quantity used per next higher level assembly of which it is a component*. A part that is not indented is a *level 1* part. This means that the quantity given is the quantity used per the portion of the vehicle illustrated on that particular spread.

HOW TO ORDER PARTS

Replacement parts and accessories can be obtained from our network of authorized dealers and distributors. You can obtain the name and phone number of your closest authorized Club Car dealer or distributor by visiting our web site at www.clubcar.com and clicking on the "*Distributor Search*" link or by calling our toll-free Service Parts and Technical Assistance hotline at (800) 872-2246 or (706) 863-3000, extension 3887.

Club Car®

P. O. Box 204658
Augusta, Georgia 30917-4658 USA
Telephone 706-863-3000
Service Parts Fax 706-855-7413
www.clubcar.com

NOTE: *This illustrated parts list represents the most current information at the time of publication. Club Car, Inc. is continually working to further improve its vehicles and other products. These improvements may affect the parts used to service the vehicle. Any modification and/or significant change in specifications will be forwarded to all Club Car and Carryall distributors/dealers and will, when applicable, appear in future editions of this illustrated parts list.*

Club Car, Inc. reserves the right to change specifications and designs at any time without notice and without the obligation of making changes to units previously sold.

Copyright © 2006 Club Car, Inc.
Club Car and *ArmorFlex*
are registered trademarks of Club Car, Inc.
This manual effective July 31, 2006.

CONTENTS

SECTION 1 – BODY AND TRIM

Front Body and Trim 1-3
Dash Pockets and Floormat 1-5
Beverage Holder 1-7
Front and Center Seat Bottoms 1-9
Seat Backs and Armrests 1-11
Front Center Body and Floormat – Gasoline Vehicles 1-13
Front Center Body and Floormat – IQ Plus Vehicles 1-15
Second Center Body and Floormat – Villager 8 Gasoline Vehicles 1-17
Second Center Body and Floormat – Villager 8 IQ Plus Vehicles 1-19
Rear Forward-Facing Seat Bottom 1-21
Rear Forward-Facing Seat Bottom, Continued 1-23
Rear-Facing Seat Bottom – Villager Vehicles 1-25
Rear Seat Backs and Forward-Facing Armrests 1-27
Rear-Facing Seat Backs and Supports 1-29
Rear Access Door 1-31
Rear Body and Fender 1-33
Heat Shield – Gasoline Vehicles 1-35
Battery Insulator – Electric Vehicles 1-37
Rear Footrest and Handrails 1-39

SECTION 2 – WHEELS AND TIRES

Wheels and Tires 2-3
Wheels and Tires (Front Only) 2-5

SECTION 3 – DECALS

Decals – Villager 6 3-3
Decals – Villager 6 IQ Plus Vehicles 3-5
Decals – Villager 6 Gasoline Vehicles 3-7
Decals – Villager 8 3-9
Decals – Villager 8 IQ Plus Vehicles 3-11
Decals – Villager 8 Gasoline Vehicles 3-13
Logo Decals – Villager 6 and 8 3-15
IQ Plus Logo Decal – IQ Plus Vehicles 3-17

SECTION 4 – BRAKES, PEDALS, AND CABLES

Rear Brake Assembly 4-3
Brake Pedal Assembly – IQ Plus Vehicles 4-5

CONTENTS

Front Brake Assembly 4-7
Front Brake Cables and Equalizer 4-9
Front Brake Cable Clips and Hardware – Vehicles with Front-Wheel Brakes 4-11
Front Brake Cable Clips – IQ Plus Vehicles 4-13
Rear Brake Cables and Equalizer – Villager 6 Vehicles 4-15
Rear Brake Cables and Equalizer – Villager 8 Vehicles 4-17
Accelerator Pedal Assembly – Gasoline Vehicle 4-19
Accelerator Pedal Assembly – Electric Vehicles with MCOR 4-21
Accelerator Rod – Gasoline Villager 6 4-23
Accelerator Rod – Gasoline Villager 8 4-25

SECTION 5 – STEERING, FRONT AND REAR SUSPENSION

Steering Column 5-3
Steering Wheel 5-5
Steering Gear Assembly 5-7
Front Suspension, Upper – Villager 6 5-9
Front Suspension, Lower – Villager 6 5-11
Front Suspension, Upper – Villager 8 5-13
Front Suspension, Lower – Villager 8 5-15
Front Spindles and Hubs 5-17
Rear Suspension – Gasoline Vehicles 5-19
Rear Suspension – IQ Plus Vehicles 5-21
Stabilizer Bar – Gasoline Vehicles 5-23

SECTION 6 – ELECTRICAL SYSTEM – GASOLINE VEHICLES

Wiring – Villager 6 6-5
Wiring – Villager 8 6-9
Front Body Electrical Components 6-11
Headlights 6-13
Electrical Component Box – Villager 6 6-15
Electrical Component Box – Villager 8 6-17
Instrument Panel and Electrical Components – Gasoline Vehicles 6-19
Horn and Brake Switches 6-21
Starter/Generator Assembly 6-23
FE350 Starter/Generator Mounting 6-25
Battery – Gasoline Vehicle 6-27
Operation and Maintenance Switch 6-29
Electrical Components, Rear Body 6-31

CONTENTS

SECTION 7 – FE350 ENGINE WITH ACR (KEY-START VEHICLES)

FE350 Engine with ACR (Automatic Compression Release) – Shrouds and Brackets 7-3
AS11 FE350 Engine – Ignition Components and Flywheel 7-5
FE350 Engine – Oil Circulation 7-7
AS11 FE350 Engine – Cylinder Head 7-9
FE350 Engine with ACR – Crankcase, Camshaft, and Oil Sensor 7-11
AS11 FE350 Engine – Crankcase and Crankshaft 7-13
FE350 Engine Mounting 7-15

SECTION 8 – FUEL, INTAKE, AND GOVERNOR SYSTEM

Splash Guard 8-3
Fuel System 8-5
Fuel Tank with Fuel Level Sending Unit 8-7
Carburetor Assembly – FE350 8-9
Carburetor Installation – FE350 8-11
Governor and Accelerator Cables 8-13
Air Box and Intake Hose 8-15
Intake System – Villager 6 8-17
Intake System – Villager 8 8-19

SECTION 9 – EXHAUST SYSTEM

Exhaust System – FE350 Engine 9-3

SECTION 10 – TORQUE CONVERTER

Drive Clutch 10-3
Drive Belt – FE350 10-5
Driven Clutch 10-7

SECTION 11 – UNITIZED TRANSAXLE – GASOLINE VEHICLES

Unitized Transaxle – Gear Cases and Brackets 11-3
Transaxle – Transmission and Gear Reduction 11-5
Transaxle – Differential and Axles 11-7
Forward/Reverse Shifter 11-9
Forward/Reverse Shifter Cable – Villager 6 11-11
Forward/Reverse Shifter Cable – Villager 8 11-13

CONTENTS

SECTION 12 – ELECTRICAL SYSTEM – ELECTRIC VEHICLES

Wiring – Villager 6 12-5
Headlights 12-7
Wiring – Villager 8 12-11
Front Body Electrical Components – Villager 6 12-13
Front Body Electrical Components – Villager 8 12-15
Instrument Panel with Electrical Components 12-17
Horn and Brake Switches 12-19
Motor Controller Output Regulator (MCOR) 12-21
Battery Charger Receptacle 12-23
Electrical Components – IQ Plus Villager 6 12-25
Electrical Components – Villager 8 12-27
Electrical Installation – Carryall 6 12-29
Tow/Run Switch – IQ Plus Vehicles 12-31
Batteries – Villager 6 IQ Plus with T-105 Batteries 12-33
Rear Reverse Buzzer 12-35
Batteries – Villager 6 IQ Plus with T-145 Batteries 12-37
Batteries – Villager 8 IQ Plus with T-105 Batteries 12-39
Batteries – Villager 8 IQ Plus with T-145 Batteries 12-41

SECTION 13 – ELECTRIC MOTOR

Motor (Model DA5-4006) 13-3

SECTION 14 – TRANSAXLE – ELECTRIC VEHICLES

Transaxle 14-3

SECTION 15 – BATTERY CHARGER

IQ Plus Domestic Battery Charger (Model 25730) 15-3
IQ Plus Battery Charger (Model 25880), Export and European 15-5
IQ Plus Onboard Battery Charger (Model 25660), Export 15-7

SECTION 16 – MAINTENANCE AND SERVICE TOOLS

Maintenance and Service Tools 16-3
Maintenance and Service Tools, Continued 16-5
Maintenance and Service Tools, Continued 16-7
Maintenance and Service Tools, Continued 16-9
Maintenance and Service Tools, Continued 16-11

CONTENTS

SECTION i – INDEX

BODY AND TRIM

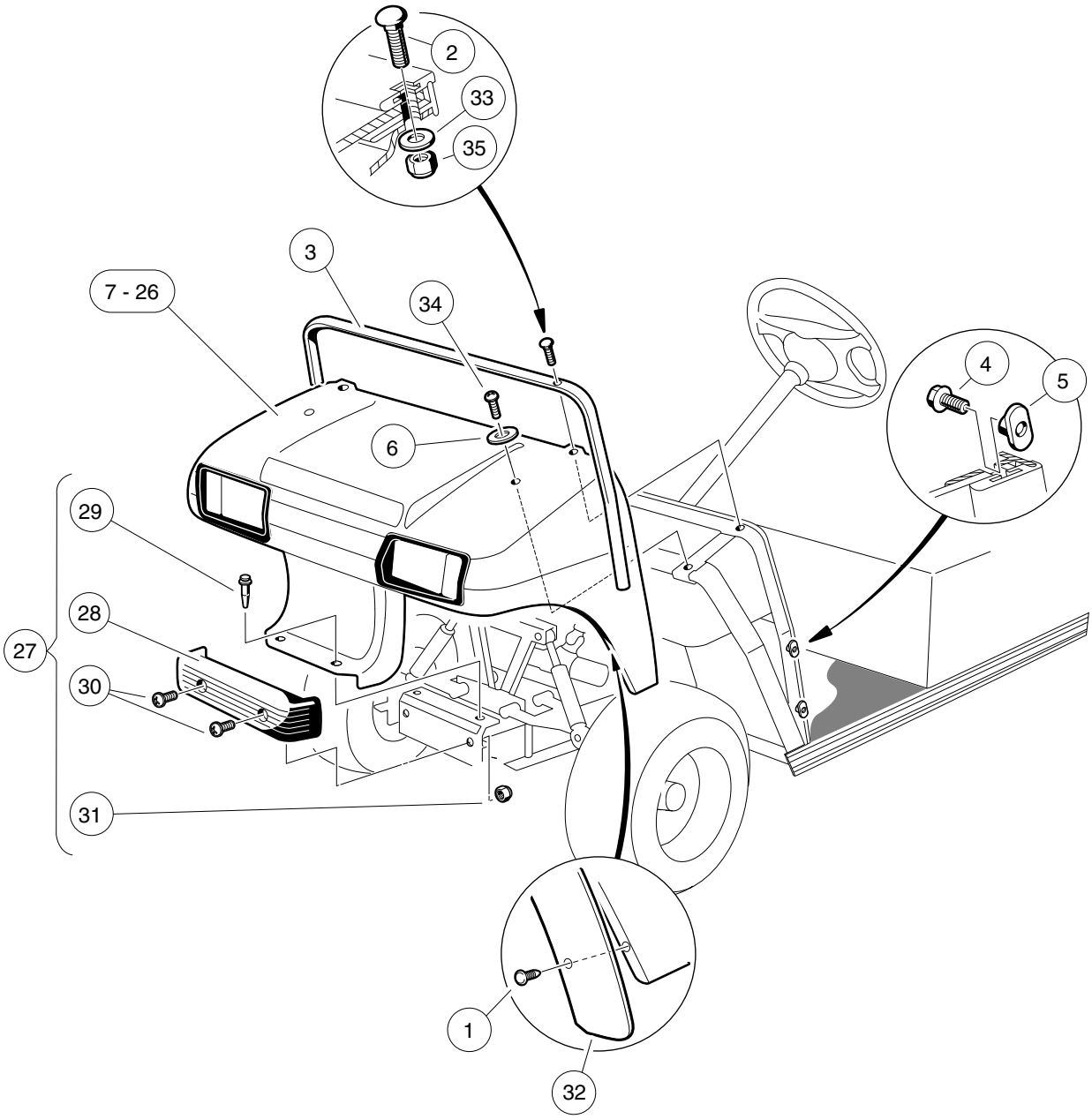

000249-005

ITEM	PART NO.	DESCRIPTION	QTY
		1 2 3 4	
1	1010434	Barrel - Plastic	12
2	1010435	Bolt, Carriage, 5/16-18 X 1.00	2
3	1011014	Trim, Cowl	1
4	1011017	Screw, #8-32 X 0.375	6
5	1011394	T-Nut Package (Set of 4)	1
6	1015075	Washer, 5/16 Flat Type A	2
7	101692501	Cowl, TPO, Beige	1
8	101692502	Cowl, TPO, White	1
9	101692506	Cowl, TPO, Red	1
10	101692509	Cowl, TPO, Pacific Blue (Royal Blue)	1
11	101692510	Cowl, TPO, Dark Green	1
12	101692511	Cowl, TPO, Black	1
13	101692512	Cowl, TPO, Classic Blue (Navy)	1
14	101692513	Cowl, TPO, Burgundy	1
15	101692514	Cowl, TPO, Dark Gray	1
16	N/A	Cowl, TPO, Safety Yellow	1
17	101693901	Cowl with Headlight Opening, TPO, Beige	1
18	101693902	Cowl with Headlight Opening, TPO, White	1
19	101693906	Cowl with Headlight Opening, TPO, Red	1
20	101693908	Cowl with Headlight Opening, TPO, Pacific Blue (Royal Blue)	1
21	101693909	Cowl with Headlight Opening, TPO, Dark Green	1
22	101693910	Cowl with Headlight Opening, TPO, Black	1
23	101693911	Cowl with Headlight Opening, TPO, Classic Blue (Navy)	1
24	101693912	Cowl with Headlight Opening, TPO, Burgundy	1
25	101693913	Cowl with Headlight Opening, TPO, Dark Gray	1
26	N/A	Cowl with Headlight Opening, TPO, Safety Yellow	1
27	1017080	Kit, Front Bumper (includes items 28 through 31)	1
28	1016868	Front Bumper	1
29	1016967	Blind Rivet, Push Type	2
30	7251	Screw, 5/16-18 x 1.0 Truss-Head	2
31	7473	Locknut, 5/16-18 Nylon Insert	2
32	101870401	Fender Extrusion	2
33	1241	Washer, 5/16 Type A Flat	2
34	7251	Screw, 5/16-18 x 1.0 Truss-Head	2
35	7473	Locknut, 5/16-18 Nylon Insert	2

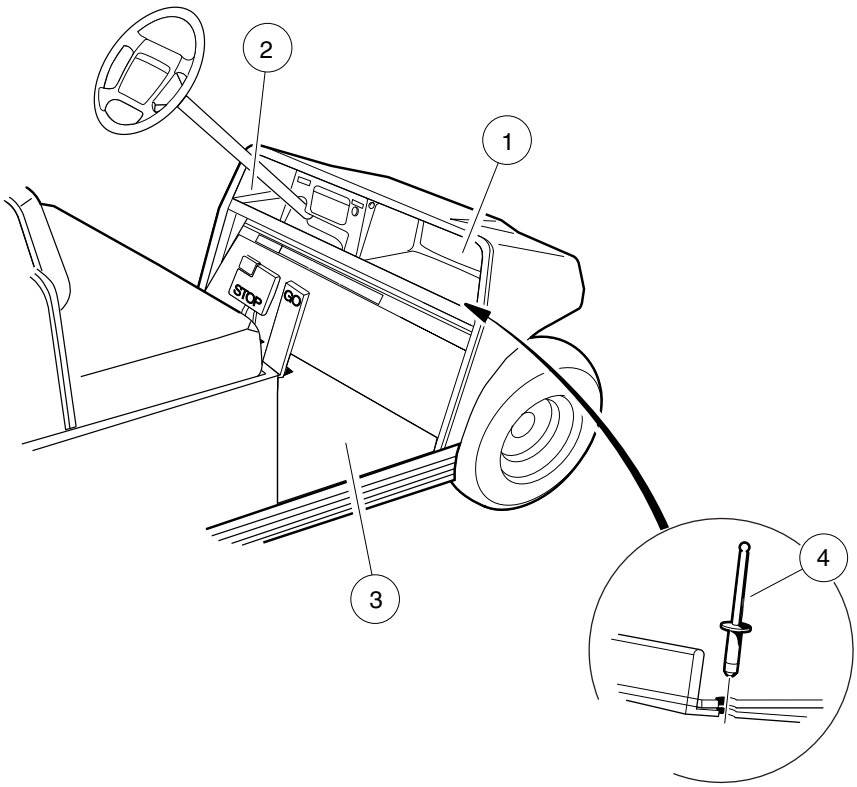

000252-002

DASH POCKETS AND FLOORMAT

ITEM	PART NO.	DESCRIPTION	QTY
		1 2 3 4	
1	1013343	Dash Component, Passenger-Side, Black	1
2	1013344	Dash Component, Driver-Side	1
3	101503202	Floormat	1
4	7973	Rivet, 3/16 X .400 Blind	5

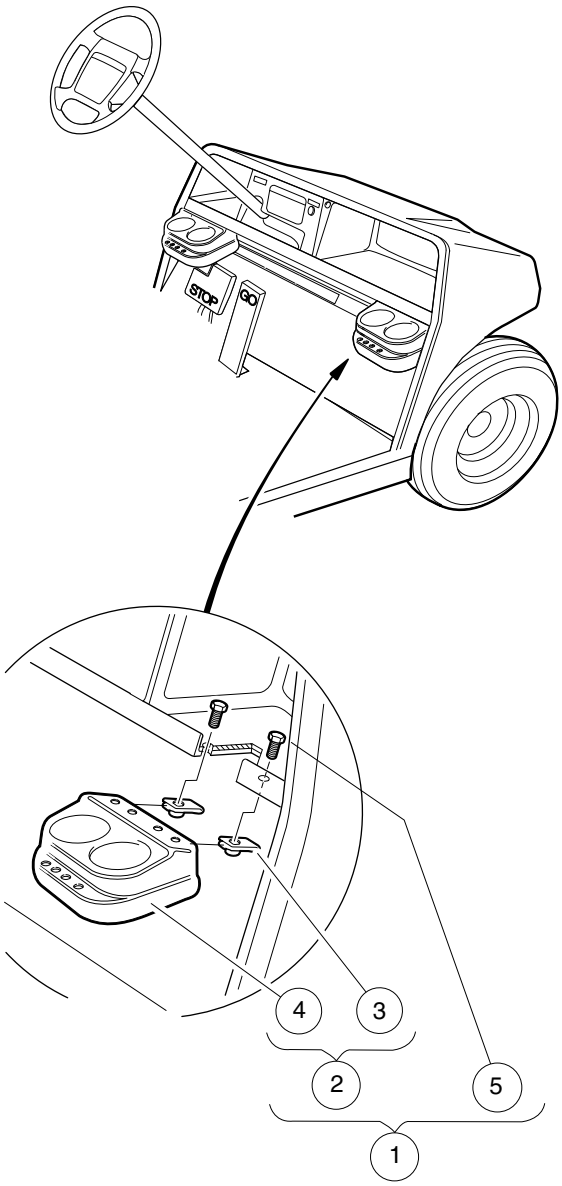

000253-002

BEVERAGE HOLDER

ITEM	PART NO.	DESCRIPTION	QTY
		1 2 3 4	
1	101708301	Drink Holder Kit (includes items 2 through 5)	2
2	N/A	Holder, Dual Cup (includes items 3 and 4)	1
3	1016952	U-Nut, 1/4-20	2
4	N/A	Cup Holder, Dual	1
5	7847	Screw, 1/4-20 X 0.75 Hex-Head Cap	2

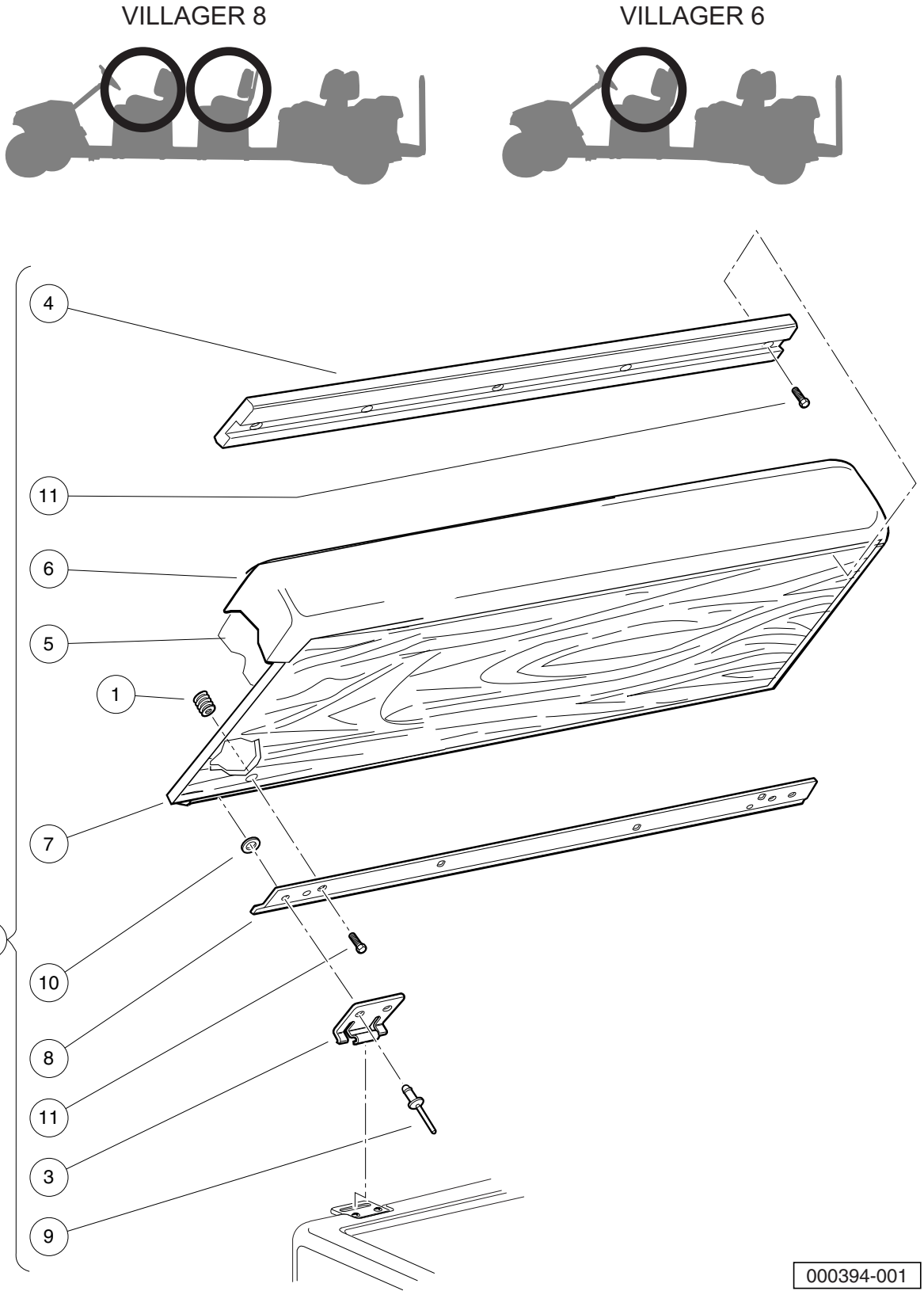
VILLAGER 8
VILLAGER 6
4
11
6
5
1
7
2
10
8
11
3
9
000394-001

FRONT AND CENTER SEAT BOTTOMS

ITEM	PART NO.	DESCRIPTION	QTY
		1 2 3 4	
1	1010543	Insert - Wood	8
2	101728201	Seat Bottom Assembly, Front, White (includes items 3 through 11)	1
3	1011652	Hinge Plate	2
4	1013312	Bumper, Seat, Long	1
5	N/A	Foam, Seat	1
6	101562712	Vinyl Cover, Seat Bottom, White	1
7	N/A	Plywood Assy	1
8	1017695	Seat Support Bracket	2
9	101880901	Rivet, 3/16, Stainless-Steel, Pop	4
10	101881701	Washer, #8 Stainless-Steel Flat	4
11	101954301	Screw, 1/4-20 X 0.75 Hex-Head Cap	8
12	101728203	Seat Bottom Assembly, Front, Beige (includes items 13 through 21)	1
13	1011652	Hinge Plate	2
14	1013312	Bumper, Seat, Long	1
15	N/A	Foam, Seat	1
16	101562711	Vinyl Cover, Seat Bottom, Buff	1
17	N/A	Plywood Assy	1
18	1017695	Seat Support Bracket	2
19	101880901	Rivet, 3/16, Stainless-Steel, Pop	4
20	101881701	Washer, #8 Stainless-Steel Flat	4
21	101954301	Screw, 1/4-20 X 0.75 Hex-Head Cap	8
22	101728210	Seat Bottom Assembly, Front, Black (includes items 23 through 31)	1
23	1011652	Hinge Plate	2
24	1013312	Bumper, Seat, Long	1
25	N/A	Foam, Seat	1
26	101562714	Vinyl Cover, Seat Bottom, Black	1
27	N/A	Plywood Assy	1
28	1017695	Seat Support Bracket	2
29	101880901	Rivet, 3/16, Stainless-Steel, Pop	4
30	101881701	Washer, #8 Stainless-Steel Flat	4
31	101954301	Screw, 1/4-20 X 0.75 Hex-Head Cap	8
32	101728213	Seat Bottom Assembly, Rear, Gray (includes items 33 through 41)	1
33	1011652	Hinge Plate	2
34	1013312	Bumper, Seat, Long	1
35	N/A	Foam, Seat	1
36	101562715	Vinyl Cover, Seat Bottom, Gray	1
37	N/A	Plywood Assy	1
38	1017695	Seat Support Bracket	2
39	101880901	Rivet, 3/16, Stainless-Steel, Pop	4
40	101881701	Washer, #8 Stainless-Steel Flat	4
41	101954301	Screw, 1/4-20 X 0.75 Hex-Head Cap	8
		Note: Sub-components contained in items 12, 22, and 32 are the same as those shown for item 2, except for the vinyl seat covers.	

VILLAGER 8

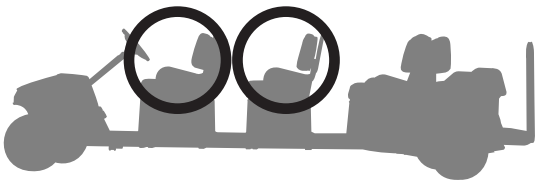

VILLAGER 6

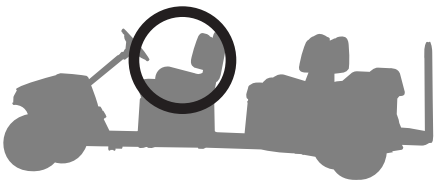

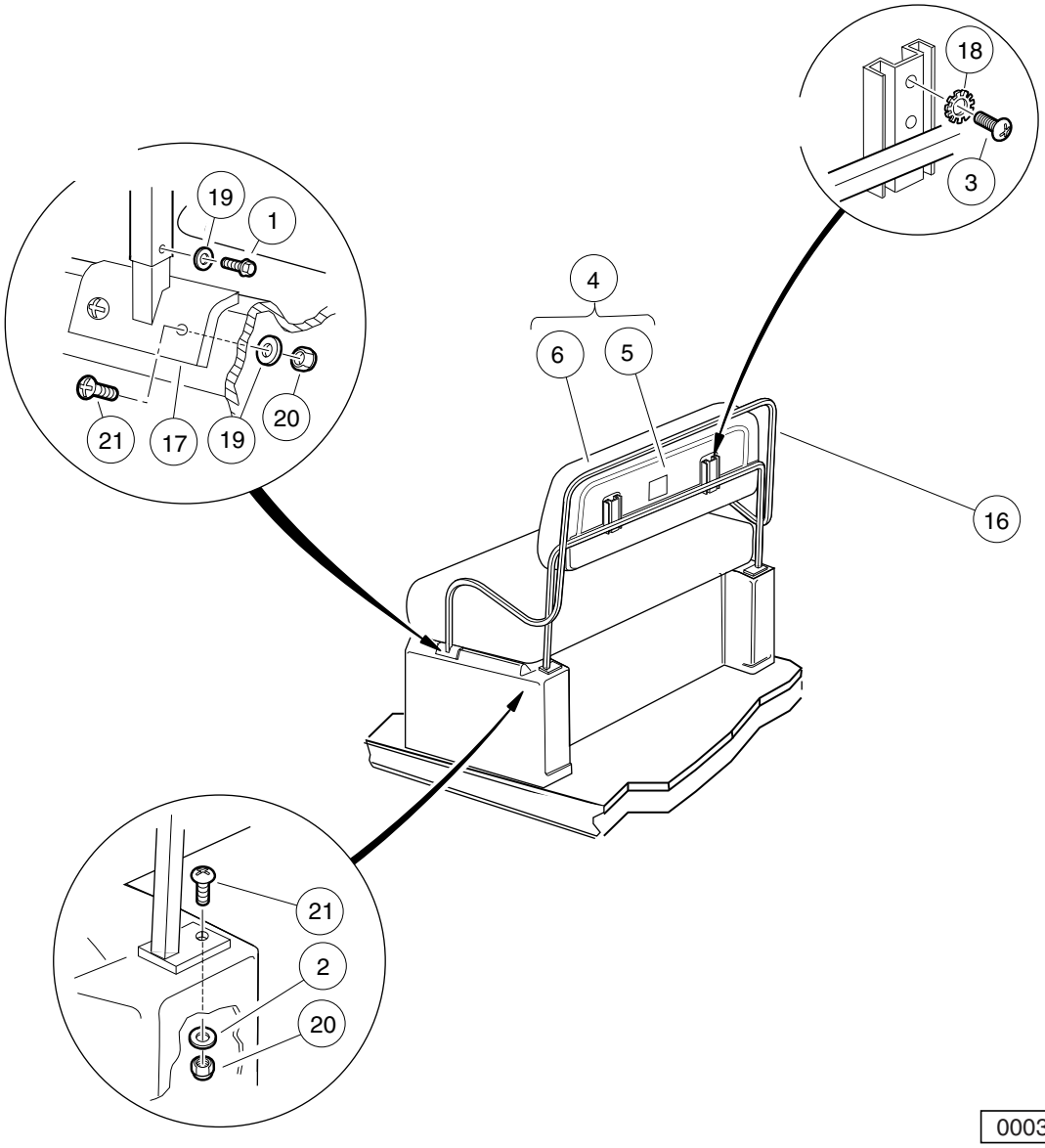

000396-001

SEAT BACKS AND ARMRESTS

ITEM	PART NO.	DESCRIPTION	QTY
		1 2 3 4	
1	1012285	Screw, 1/4 X 0.625 Hex-Head	4
2	1014306	Washer, 1/4" Type B Flat	2
3	1015902	Screw, 1/4-20 X 1.25 Truss-Head	4
4	101677701	Seat Back Assembly, White (includes items 5 and 6)	1
5	1016751	Cap, Seat Back	1
6	101675512	Vinyl Seat Back, White	1
7	101677702	Seat Back Assembly, Black (includes items 8 and 9)	1
8	1016751	Cap, Seat Back	1
9	101675514	Vinyl Seat Back, Black	1
10	101677703	Seat Back Assembly, Beige (includes items 11 and 12)	1
11	1016751	Cap, Seat Back	1
12	101675511	Vinyl Seat Back, Beige	1
13	101677705	Seat Back Assembly, Gray (includes items 14 and 15)	1
14	1016751	Cap, Seat Back	1
15	101675515	Vinyl Seat Back-gray Svc	1
16	1017259	Armrest Weld Asm Front	1
17	1017310	Armrest Mounting Weldment	2
18	101946201	Washer, Lock, 0.250 External-Tooth	4
19	332	Washer, 1/4 Type A Narrow Flat	6
20	8233	Locknut, 1/4-20 Nylon Insert	6
21	8251	Screw, 1/4-20 X 1.0 Truss-Head Machine	6

VILLAGER 8

VILLAGER 6

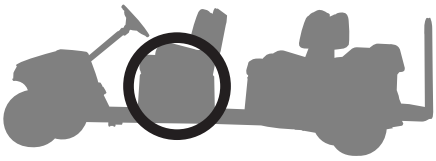

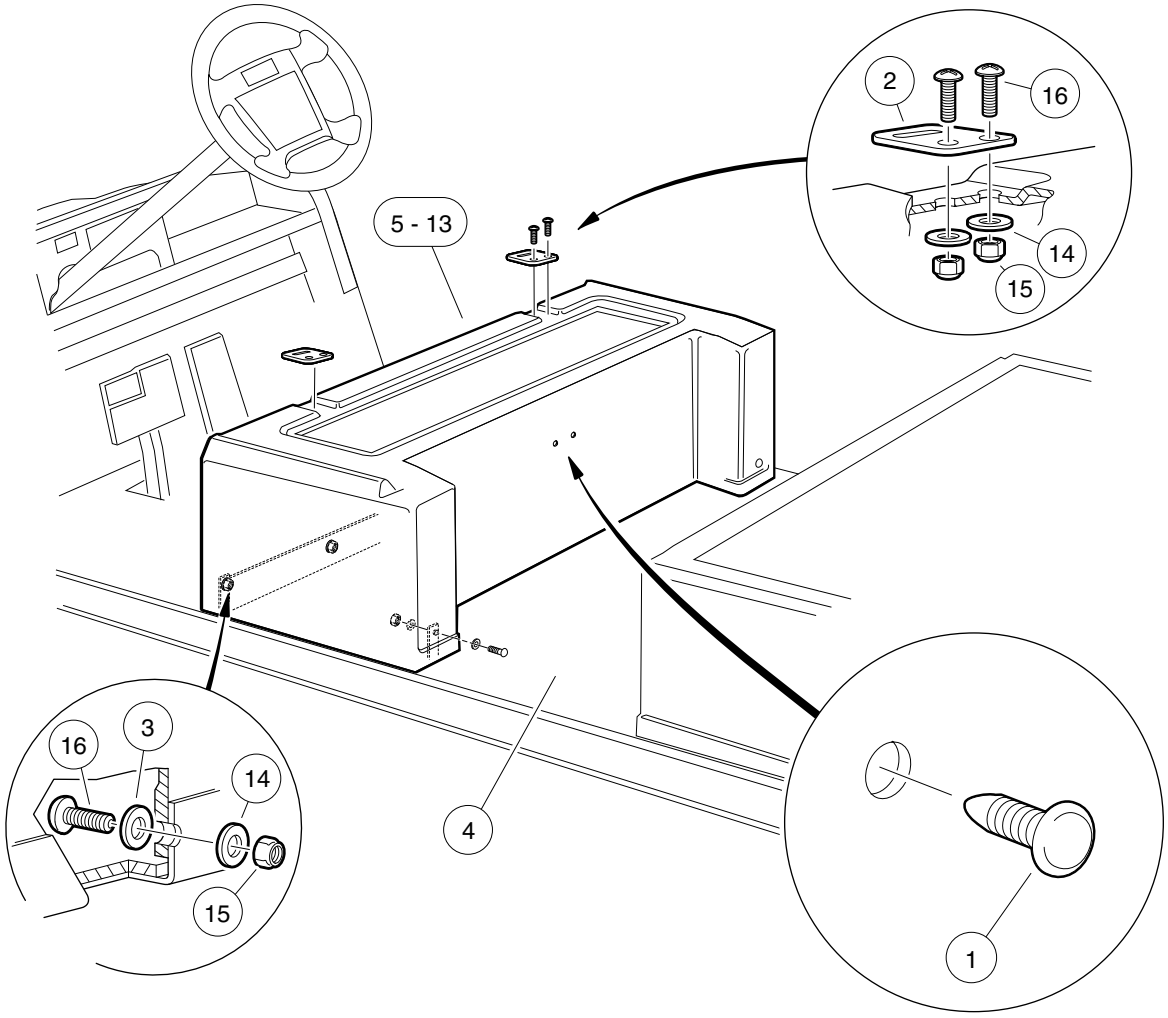

000389-001

FRONT CENTER BODY AND FLOORMAT – GASOLINE VEHICLES

ITEM	PART NO.	DESCRIPTION	QTY
		1 2 3 4	
1	1010434	Barrel - Plastic	2
2	1012412	Body, Hinge Plate	2
3	1012581	Washer, 0.609-inch OD, Nylon Cup	6
4	1017289	Rear Floormat Limo	1
5	101731601	Body, Beige, Center	1
6	101731602	Body, White, Center	1
7	101731604	Body, Gray, Center	1
8	101731606	Body, Red, Center	1
9	101731608	Body, Pacific Blue, Center	1
10	101731609	Body, Dark Green, Center	1
11	N/A	Body, Black, Center	1
12	101731611	Body, Classic Blue, Center	1
13	101731612	Body, Burgundy, Center	1
14	332	Washer, 1/4 Type A Narrow Flat	10
15	8233	Locknut, 1/4-20 Nylon Insert	10
16	8251	Screw, 1/4-20 X 1.0 Truss-Head Machine	10

VILLAGER 8

VILLAGER 6

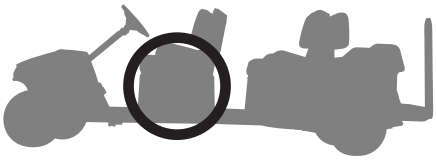

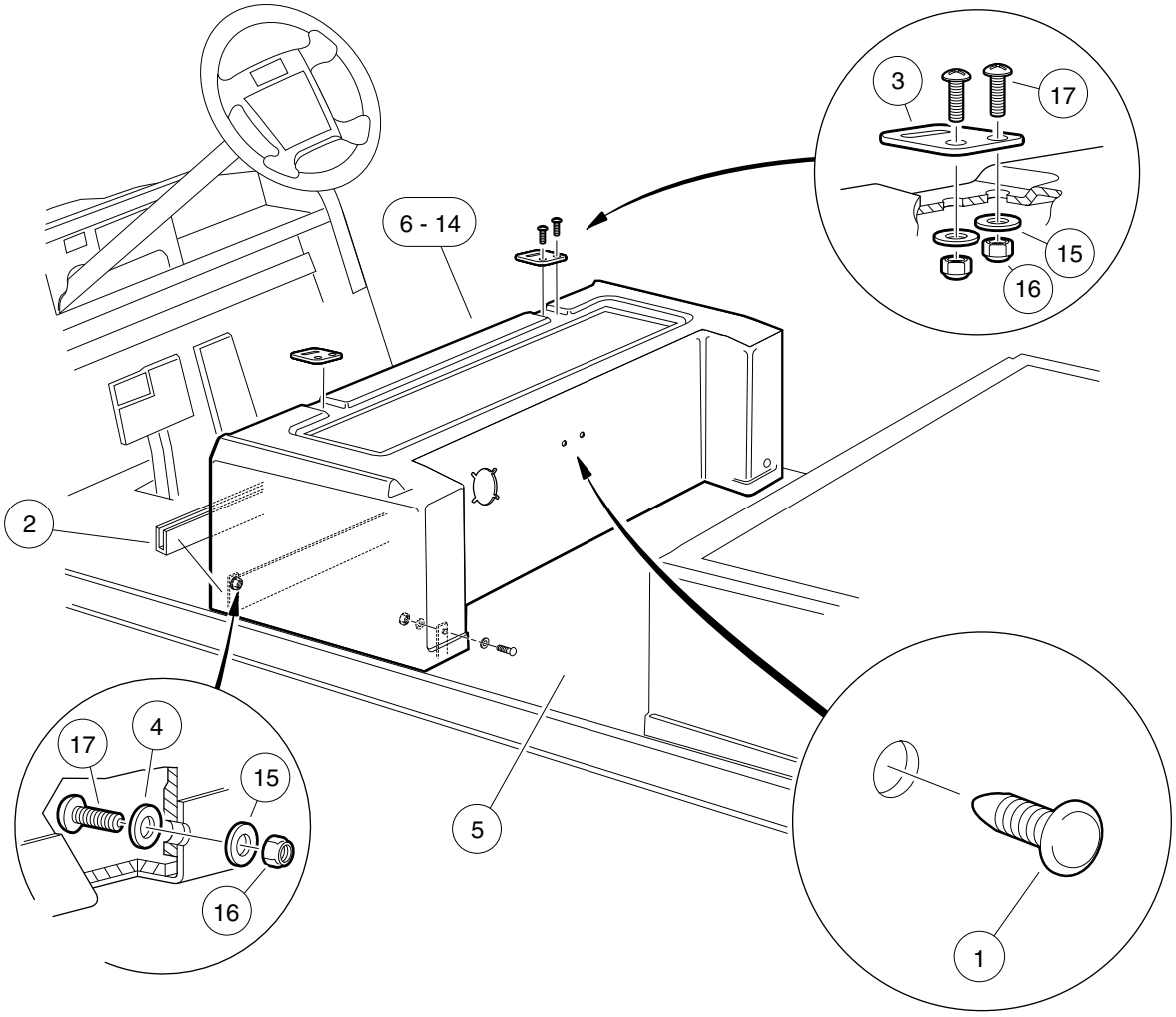

000389-002

FRONT CENTER BODY AND FLOORMAT – IQ PLUS VEHICLES

ITEM	PART NO.	DESCRIPTION	QTY
		1 2 3 4	
1	1010434	Barrel - Plastic	2
2	1010993	Body Kick Plate	1
3	1012412	Body, Hinge Plate	2
4	1012581	Washer, 0.609-inch OD, Nylon Cup	4
5	1017289	Rear Floormat Limo	1
6	102945401	Body, Beige, Center	1
7	102945402	Body, White, Center	1
8	102945404	Body, Gray, Center	1
9	102945406	Body, Red, Center	1
10	102945408	Body, Pacific Blue, Center	1
11	102945409	Body, Dark Green, Center	1
12	102945410	Body, Black, Center	1
13	102945411	Body, Classic Blue, Center	1
14	102945412	Body, Burgundy, Center	1
15	332	Washer, 1/4 Type A Narrow Flat	8
16	8233	Locknut, 1/4-20 Nylon Insert	8
17	8251	Screw, 1/4-20 X 1.0 Truss-Head Machine	8

VILLAGER 8

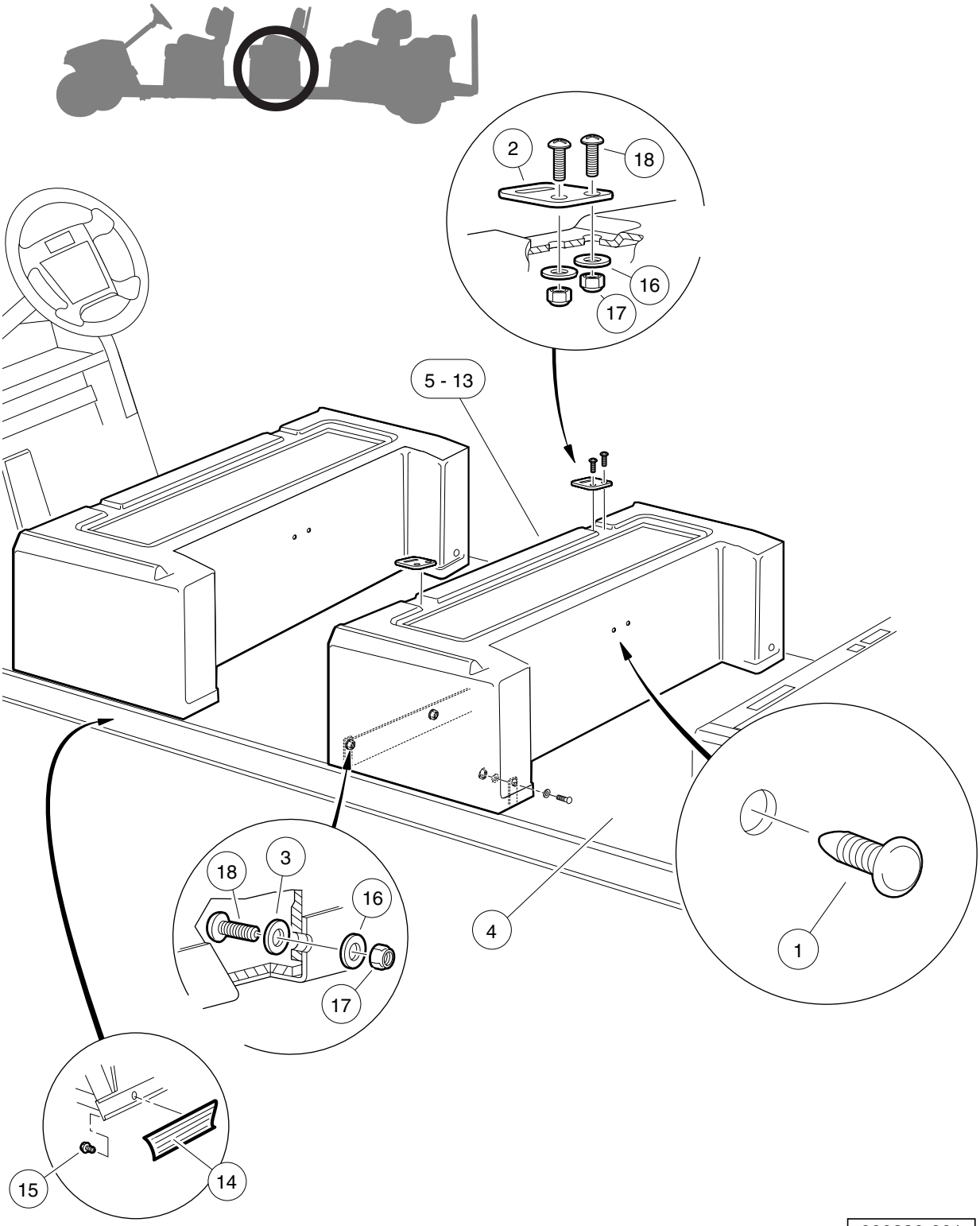

SECOND CENTER BODY AND FLOORMAT – VILLAGER 8 GASOLINE VEHICLES

ITEM	PART NO.	DESCRIPTION	QTY
		1 2 3 4	
1	1010434	Barrel - Plastic	2
2	1012412	Body, Hinge Plate	2
3	1012581	Washer, 0.609-inch OD, Nylon Cup	6
4	1017289	Rear Floormat Limo	1
5	101788201	Body, Beige, Center	1
6	101788202	Body, White, Center	1
7	101788204	Body, Gray, Center	1
8	101788206	Body, Red, Center	1
9	N/A	Body, Pacific Blue, Center	1
10	101788209	Body, Dark Green, Center	1
11	101788210	Body, Black, Center	1
12	101788211	Body, Classic Blue, Center	1
13	101788212	Body, Burgundy, Center	1
14	101791901	Bumper Guard Vinyl Trim	2
15	102310701	Screw, #8-18 x 0.375, Hex-Head Washer	8
16	332	Washer, 1/4 Type A Narrow Flat	10
17	8233	Locknut, 1/4-20 Nylon Insert	10
18	8251	Screw, 1/4-20 X 1.0 Truss-Head Machine	10

VILLAGER 8

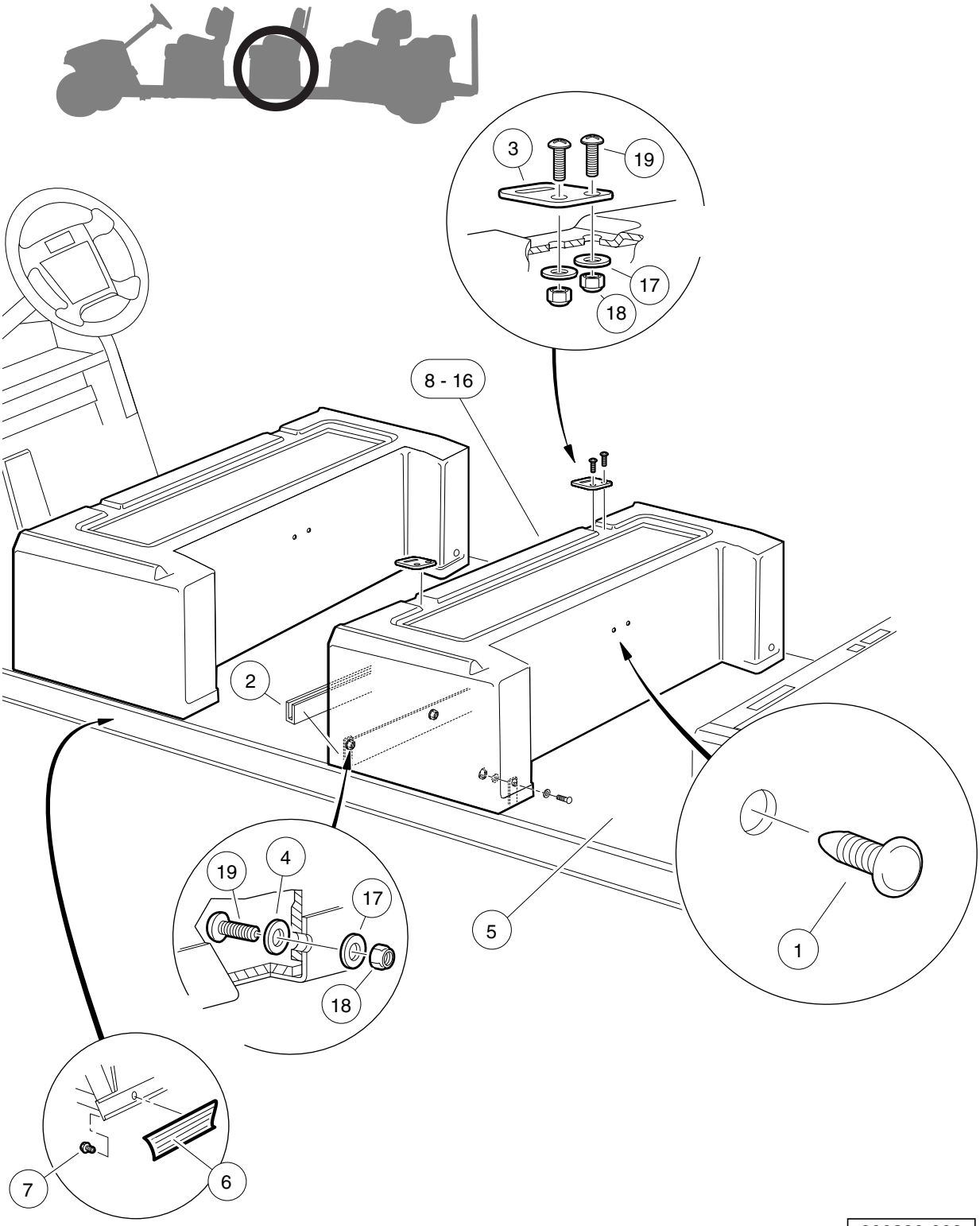

SECOND CENTER BODY AND FLOORMAT – VILLAGER 8 IQ PLUS VEHICLES

ITEM	PART NO.	DESCRIPTION	QTY
		1 2 3 4	
1	1010434	Barrel - Plastic	2
2	1010993	Body Kick Plate	1
3	1012412	Body, Hinge Plate	2
4	1012581	Washer, 0.609-inch OD, Nylon Cup	4
5	1017289	Rear Floormat Limo	1
6	101791901	Bumper Guard Vinyl Trim	2
7	102310701	Screw, #8-18 x 0.375, Hex-Head Washer	8
8	102945501	Body, Beige, Center	1
9	102945502	Body, White, Center	1
10	102945504	Body, Gray, Center	1
11	102945506	Body, Red, Center	1
12	102945508	Body, Pacific Blue, Center	1
13	102945509	Body, Dark Green, Center	1
14	102945510	Body, Black, Center	1
15	102945511	Body, Classic Blue, Center	1
16	102945512	Body, Burgundy, Center	1
17	332	Washer, 1/4 Type A Narrow Flat	8
18	8233	Locknut, 1/4-20 Nylon Insert	8
19	8251	Screw, 1/4-20 X 1.0 Truss-Head Machine	8

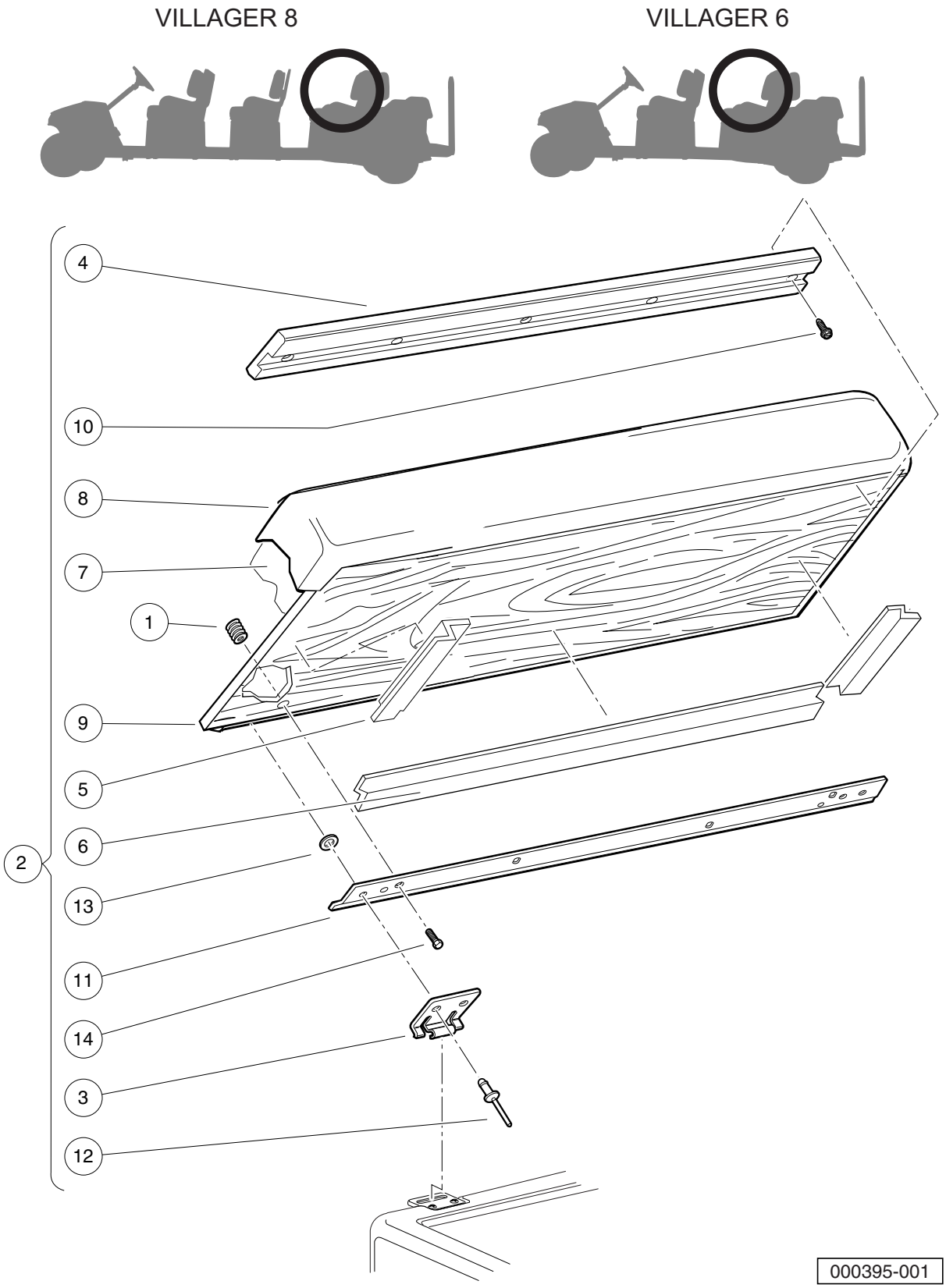
VILLAGER 8
VILLAGER 6
4
10
8
7
1
9
5
6
2
13
11
14
3
12
000395-001

REAR FORWARD-FACING SEAT BOTTOM

ITEM	PART NO.	DESCRIPTION	QTY
		1 2 3 4	
1	1010543	Insert - Wood	8
2	101728202	Seat Bottom Assembly, Rear, White (includes items 3 through 14)	1
3	1011652	Hinge Plate	2
4	1012597	Seat Bumper	1
5	1012656	Seat Gasket, Short	2
6	1012657	Seat Gasket, Long	1
7	N/A	Foam, Seat	1
8	101562712	Vinyl Cover, Seat Bottom, White	1
9	N/A	Plywood Assy	1
10	1017384	Screw, #12 X .50 Hex, Washer-Head	5
11	1017695	Seat Support Bracket	2
12	101880901	Rivet, 3/16, Stainless-Steel, Pop	4
13	101881701	Washer, #8 Stainless-Steel Flat	4
14	101954301	Screw, 1/4-20 X 0.75 Hex-Head Cap	8
15	101728204	Seat Bottom Assembly, Rear, Beige (includes items 16 through 27)	1
16	1011652	Hinge Plate	2
17	1012597	Seat Bumper	1
18	1012656	Seat Gasket, Short	2
19	1012657	Seat Gasket, Long	1
20	N/A	Foam, Seat	1
21	101562711	Vinyl Cover, Seat Bottom, Buff	1
22	N/A	Plywood Assy	1
23	1017384	Screw, #12 X .50 Hex, Washer-Head	5
24	1017695	Seat Support Bracket	2
25	101880901	Rivet, 3/16, Stainless-Steel, Pop	4
26	101881701	Washer, #8 Stainless-Steel Flat	4
27	101954301	Screw, 1/4-20 X 0.75 Hex-Head Cap	8

Note: Sub-components contained in item 15 are the same as those shown for item 2, except for the vinyl seat cover.

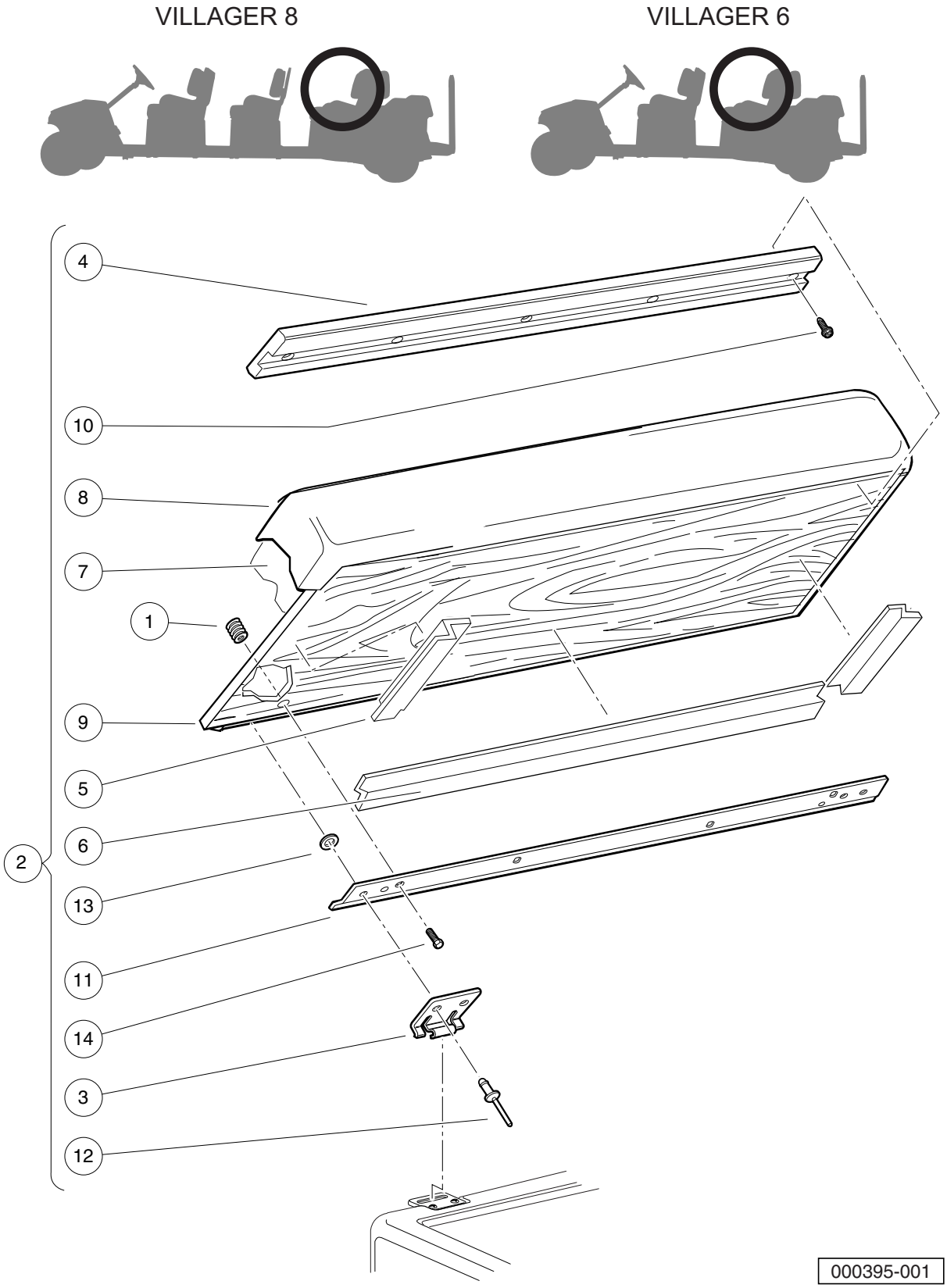
VILLAGER 8
VILLAGER 6
4
10
8
7
1
9
5
6
2
13
11
14
3
12
000395-001

REAR FORWARD-FACING SEAT BOTTOM, CONTINUED

ITEM	PART NO.	DESCRIPTION	QTY
		1 2 3 4	
1	1010543	Insert - Wood	8
2	101728211	Seat Bottom Assembly, Rear, Black (includes items 3 through 14)	1
3	1011652	Hinge Plate	2
4	1012597	Seat Bumper	1
5	1012656	Seat Gasket, Short	2
6	1012657	Seat Gasket, Long	1
7	N/A	Foam, Seat	1
8	101562714	Vinyl Cover, Seat Bottom, Black	1
9	N/A	Plywood Assy	1
10	1017384	Screw, #12 X .50 Hex, Washer-Head	5
11	1017695	Seat Support Bracket	2
12	101880901	Rivet, 3/16, Stainless-Steel, Pop	4
13	101881701	Washer, #8 Stainless-Steel Flat	4
14	101954301	Screw, 1/4-20 X 0.75 Hex-Head Cap	8
15	101728214	Seat Bottom Assembly, Rear, Gray (includes items 16 through 27)	1
16	1011652	Hinge Plate	2
17	1012597	Seat Bumper	1
18	1012656	Seat Gasket, Short	2
19	1012657	Seat Gasket, Long	1
20	N/A	Foam, Seat	1
21	101562715	Vinyl Cover, Seat Bottom, Gray	1
22	N/A	Plywood Assy	1
23	1017384	Screw, #12 X .50 Hex, Washer-Head	5
24	1017695	Seat Support Bracket	2
25	101880901	Rivet, 3/16, Stainless-Steel, Pop	4
26	101881701	Washer, #8 Stainless-Steel Flat	4
27	101954301	Screw, 1/4-20 X 0.75 Hex-Head Cap	8

Note: Sub-components contained in item 15 are the same as those shown for item 2, except for the vinyl seat cover.

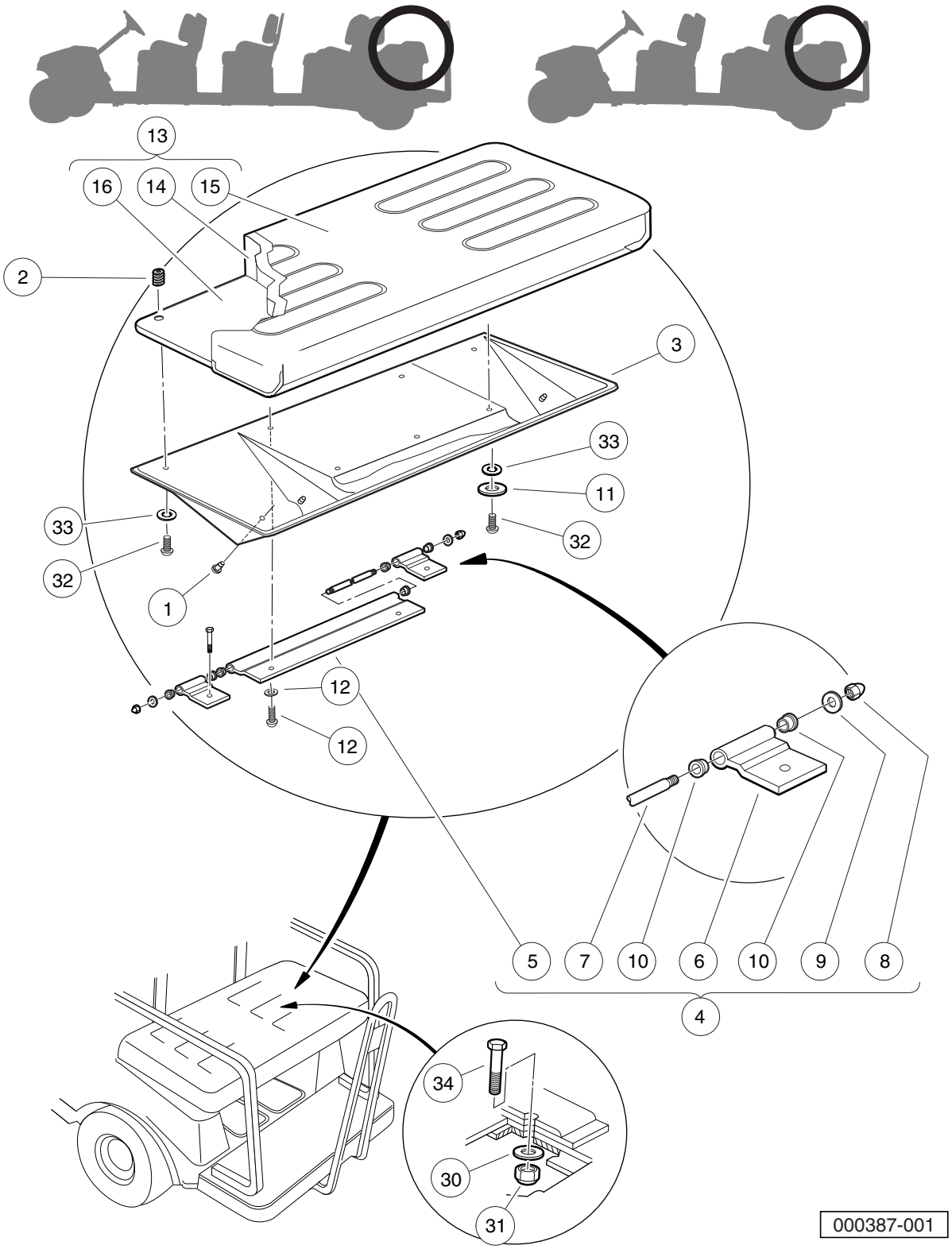
VILLAGER 8
VILLAGER 6
13
16
14
15
2
3
33
11
32
33
32
1
12
12
5
7
10
6
10
9
8
4
34
30
31
000387-001

REAR-FACING SEAT BOTTOM – VILLAGER VEHICLES

ITEM	PART NO.	DESCRIPTION	QTY
		1 2 3 4	
1	1010436	Bumper, Rubber	1
2	1010543	Insert - Wood	7
3	1011210	Seat Support 4-Passenger	1
4	1011219	Hinge Assembly 4 Passenger (includes items 5 through 10)	1
5	1011220	Hinge Long 4 Passenger	1
6	1011221	Hinge Short 4 Passenger	2
7	1011222	Pin, Hinge, Long, 4-Pass	1
8	1015091	Nut, 1/4-20 Stainless-Steel Center-Lock Cap	2
9	332	Washer, 1/4 Type A Narrow Flat	2
10	8028	Rotor Stop, FNR	6
11	1011578	Washer, 5/16 Type B Flat	3
12	1014007	Washer, 1/4 Flat	2
13	101564804	Seat Bottom Assembly, Buff (includes items 14 through 16)	1
14	N/A	Foam, Seat	1
15	101562711	Vinyl Cover, Seat Bottom, Buff	1
16	N/A	Plywood Assy	1
17	101564805	Seat Bottom Assembly, White (includes items 18 through 20)	1
18	N/A	Foam, Seat	1
19	101562712	Vinyl Cover, Seat Bottom, White	1
20	N/A	Plywood Assy	1
21	101564807	Seat Bottom Assembly, Gray (includes items 22 through 24)	1
22	N/A	Foam, Seat	1
23	101562715	Vinyl Cover, Seat Bottom, Gray	1
24	N/A	Plywood Assy	1
25	101564808	Seat Bottom Assembly, Black (includes items 26 through 28)	1
26	N/A	Foam, Seat	1
27	101562714	Vinyl Cover, Seat Bottom, Black	1
28	N/A	Plywood Assy	1
29	1016916	Screw, 1/4-20 X 1.50 Hex-Head Cap	2
30	1241	Washer, 5/16 Type A Flat	2
31	7473	Locknut, 5/16-18 Nylon Insert	2
32	8251	Screw, 1/4-20 X 1.0 Truss-Head Machine	5
33	8304	Lockwasher, 1/4 Type A Int.tth	5
34	8963	Screw, 5/16-18 X 1.75 Hex-Head Cap	2

Note: Sub-components contained in items 17, 21, and 25 are the same as those shown for item 13, except for the vinyl seat covers.

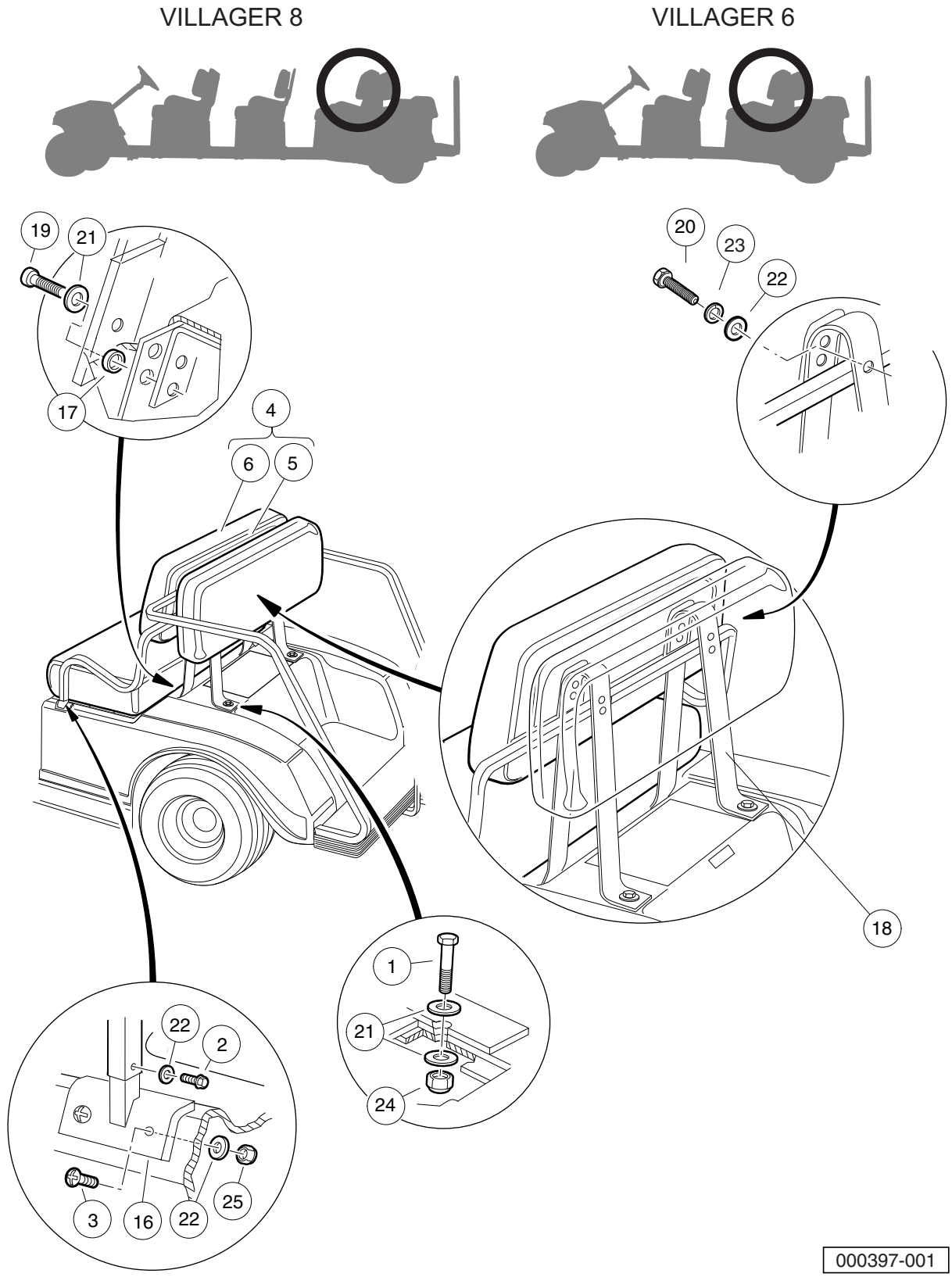
VILLAGER 8
VILLAGER 6
19
21
17
4
6
5
20
23
22
18
1
21
24
22
2
3
16
22
25
000397-001

REAR SEAT BACKS AND FORWARD-FACING ARMRESTS

ITEM	PART NO.	DESCRIPTION	QTY
		1 2 3 4	
1	1010577	Bolt, Hex-Head, 5/16-18 X 1.50	2
2	1012285	Screw, 1/4 X 0.625 Hex-Head	10
3	1015902	Screw, 1/4-20 X 1.25 Truss-Head	4
4	101677701	Seat Back Assembly, White (includes items 5 and 6)	2
5	1016751	Cap, Seat Back	1
6	101675512	Vinyl Seat Back, White	1
7	101677702	Seat Back Assembly, Black (includes items 8 and 9)	2
8	1016751	Cap, Seat Back	1
9	101675514	Vinyl Seat Back, Black	1
10	101677703	Seat Back Assembly, Beige (includes items 11 and 12)	2
11	1016751	Cap, Seat Back	1
12	101675511	Vinyl Seat Back, Beige	1
13	101677705	Seat Back Assembly, Gray (includes items 14 and 15)	2
14	1016751	Cap, Seat Back	1
15	101675515	Vinyl Seat Back-gray Svc	1
16	1017310	Armrest Mounting Weldment	2
17	1017774	Body Spacer	4
18	101799201	Armrest Weldment Rear	1
19	101910401	Screw, 5/16-18 X 1.25 Thrd Frm	4
20	101954301	Screw, 1/4-20 X 0.75 Hex-Head Cap	8
21	1241	Washer, 5/16 Type A Flat	6
22	332	Washer, 1/4 Type A Narrow Flat	14
23	451	Lockwasher, 1/4 Helical Split	8
24	7473	Locknut, 5/16-18 Nylon Insert	2
25	8233	Locknut, 1/4-20 Nylon Insert	4

Note: Sub-components contained in items 7, 10, and 13 are the same as those shown for item 4, except for the vinyl seat covers.

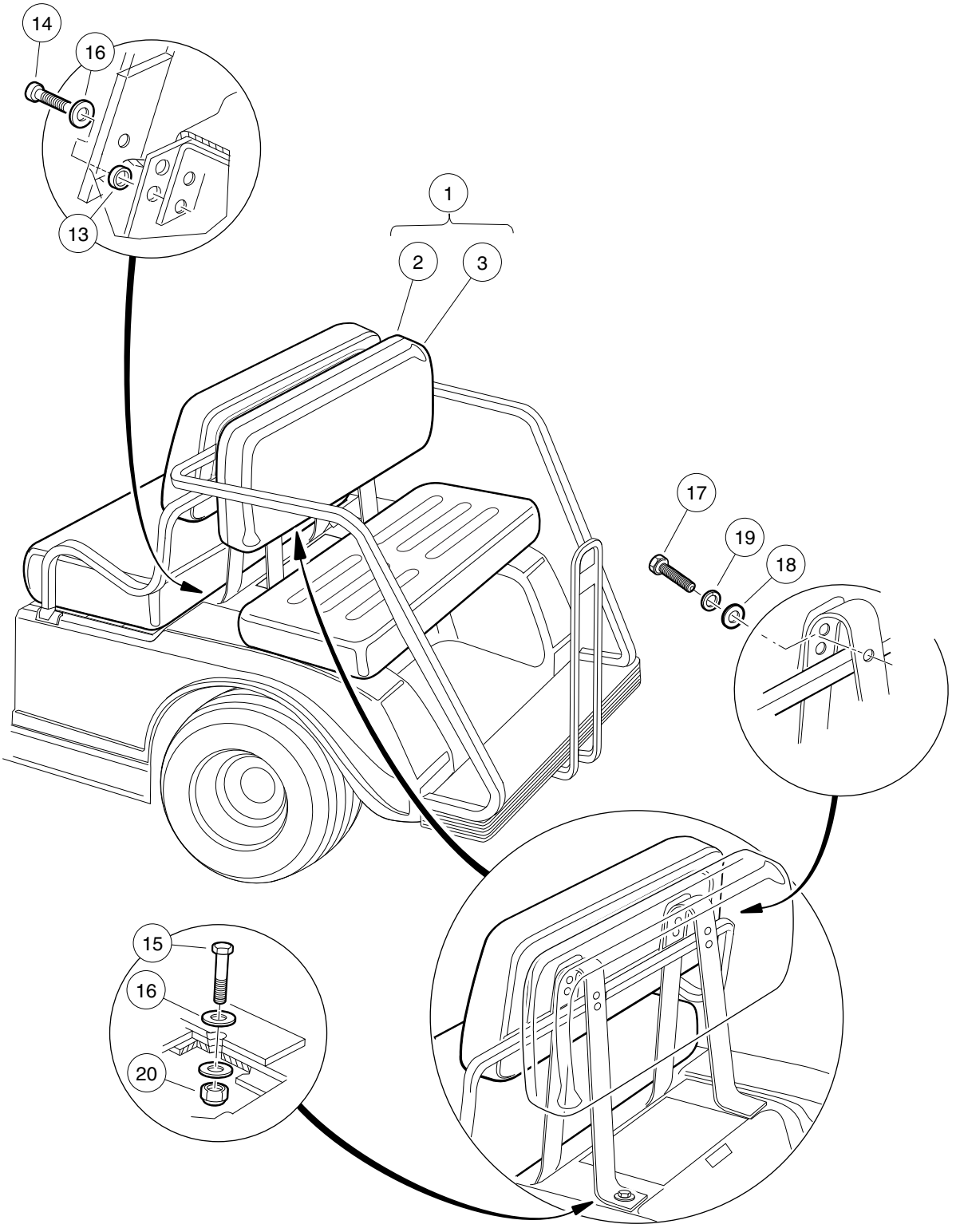
14
16
13
1
2
3
17
19
18
15
16
20
000403-001

REAR-FACING SEAT BACKS AND SUPPORTS

ITEM	PART NO.	DESCRIPTION	QTY
		1 2 3 4	
1	101677701	Seat Back Assembly, White (includes items 2 and 3)	1
2	1016751	Cap, Seat Back	1
3	101675512	Vinyl Seat Back, White	1
4	101677702	Seat Back Assembly, Black (includes items 5 and 6)	1
5	1016751	Cap, Seat Back	1
6	101675514	Vinyl Seat Back, Black	1
7	101677703	Seat Back Assembly, Beige (includes items 8 and 9)	1
8	1016751	Cap, Seat Back	1
9	101675511	Vinyl Seat Back, Beige	1
10	101677705	Seat Back Assembly, Gray (includes items 11 and 12)	1
11	1016751	Cap, Seat Back	1
12	101675515	Vinyl Seat Back-gray Svc	1
13	1017774	Body Spacer	4
14	101910401	Screw, 5/16-18 X 1.25 Thrd Frm	4
15	1218	Screw, 5/16-18 X 1.25 Hex-Head Cap	2
16	1241	Washer, 5/16 Type A Flat	6
17	304	Screw, 1/4-20 X 1.0 Hex-Head Cap	4
18	332	Washer, 1/4 Type A Narrow Flat	4
19	451	Lockwasher, 1/4 Helical Split	4
20	7473	Locknut, 5/16-18 Nylon Insert	2

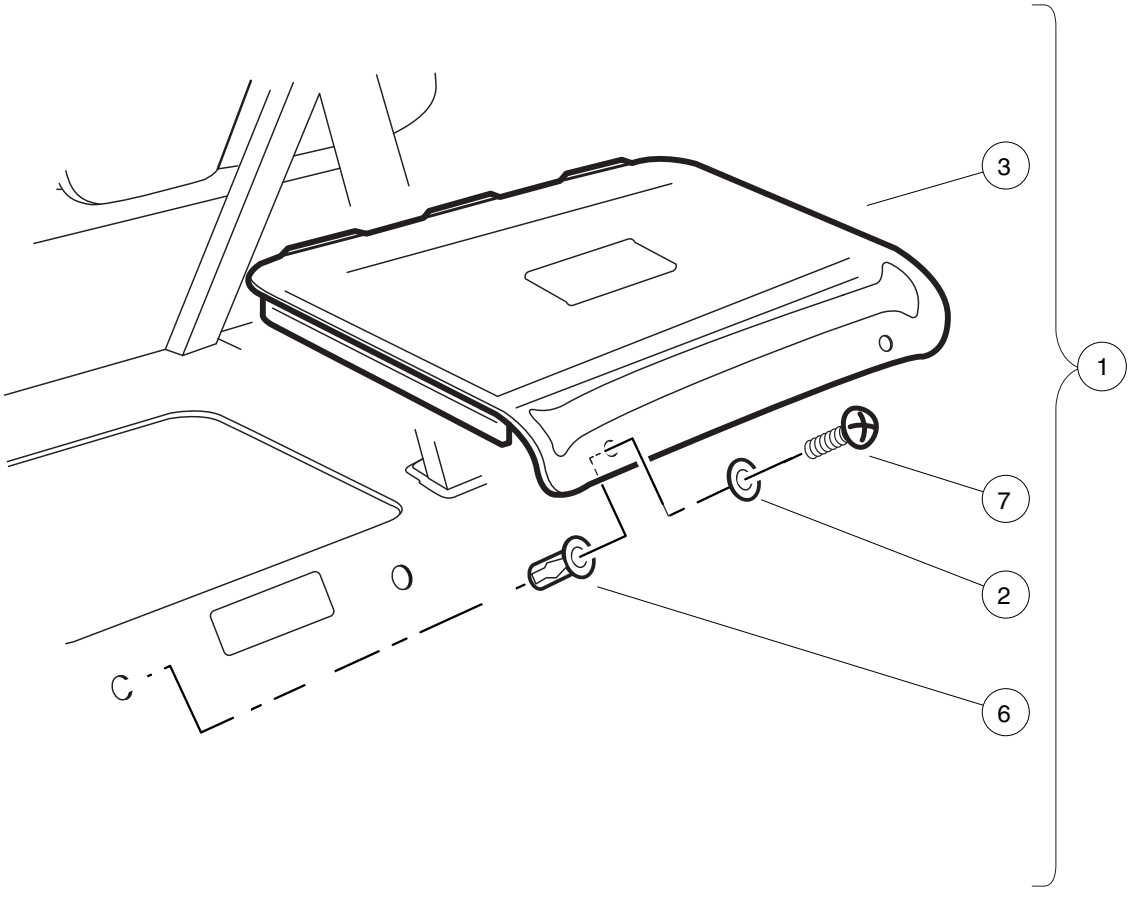

000783-001

REAR ACCESS DOOR

ITEM	PART NO.	DESCRIPTION	QTY
		1 2 3 4	
1	1013218	Kit, Access Door Black (includes items 2 through 7)	1
2	1012581	Washer, 0.609-inch OD, Nylon Cup	2
3	N/A	Molded Access Door Black	1
4	1013216	Plug, Button	2
5	N/A	Instruction Sheet Access Door	1
6	1015525	Nut, 1/4-20 Blind	2
7	8251	Screw, 1/4-20 X 1.0 Truss-Head Machine	2

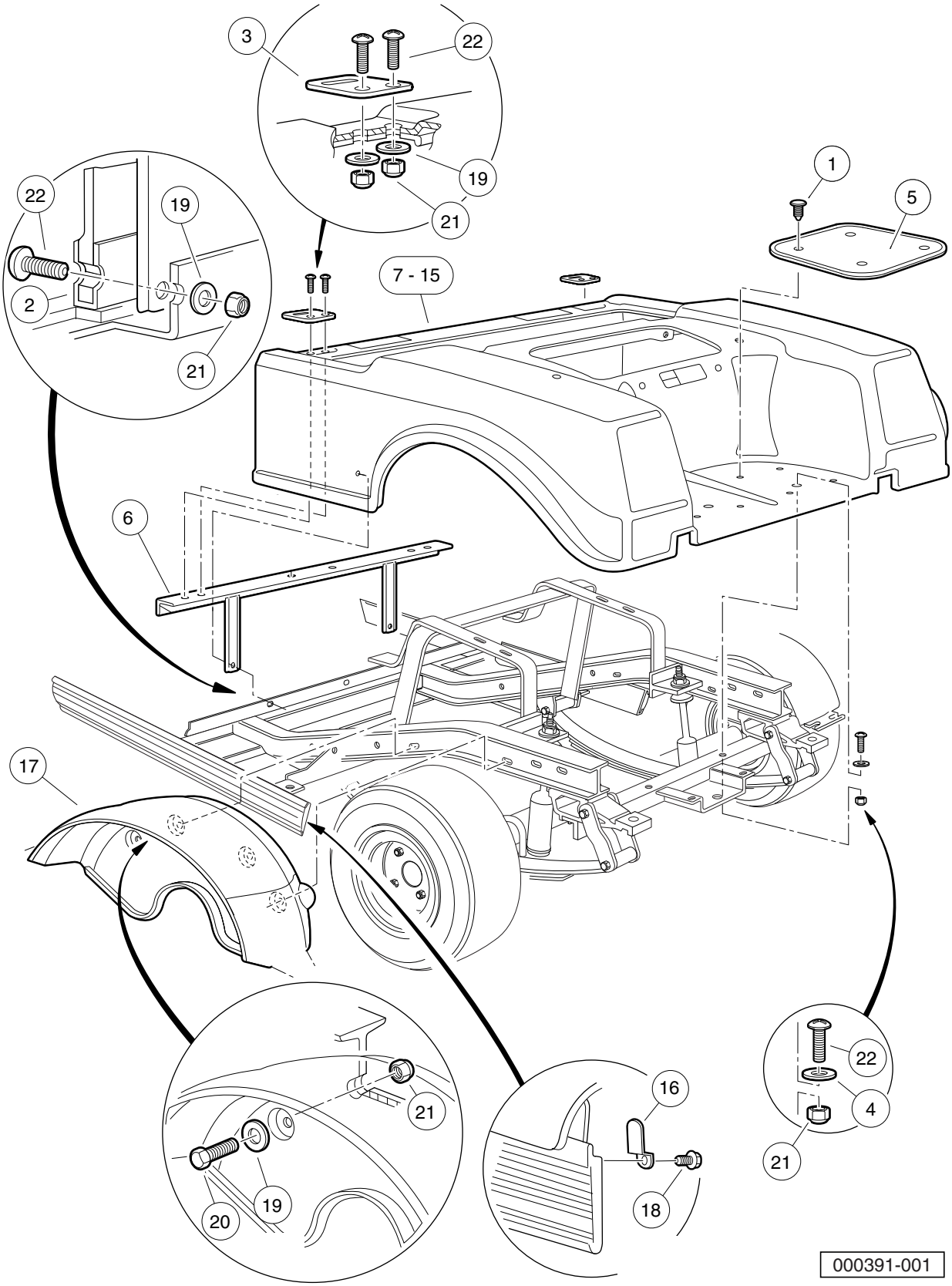
3
22
19
21
22
19
2
21
1
5
7 - 15
6
17
21
20
19
16
18
22
4
21
000391-001

REAR BODY AND FENDER

ITEM	PART NO.	DESCRIPTION	QTY
		1 2 3 4	
1	1010434	Barrel - Plastic	8
2	1010993	Body Kick Plate	1
3	1012412	Body, Hinge Plate	2
4	1014306	Washer, 1/4" Type B Flat	2
5	1014392	Bag Rest Mat	2
6	1017141	Body Support Front	1
7	101728701	Body, Beige, TPO, Rear	1
8	101728702	Body, White, TPO, Rear	1
9	101728704	Body, Gray, TPO, Rear	1
10	101728706	Body, Red, TPO, Rear	1
11	101728708	Body, Royal Blue, TPO, Rear	1
12	101728709	Body, Dark Green, TPO, Rear	1
13	N/A	Body, Black, TPO, Rear	1
14	101728711	Body, Classic Blue, TPO, Rear	1
15	101728712	Body, Burgundy, TPO, Rear	1
16	1017748	Body Keeper Clip	2
17	1017936	Fender, Inner	2
18	102310701	Screw, #8-18 x 0.375, Hex-Head Washer	2
19	332	Washer, 1/4 Type A Narrow Flat	10
20	7847	Screw, 1/4-20 X 0.75 Hex-Head Cap	4
21	8233	Locknut, 1/4-20 Nylon Insert	12
22	8251	Screw, 1/4-20 X 1.0 Truss-Head Machine	8

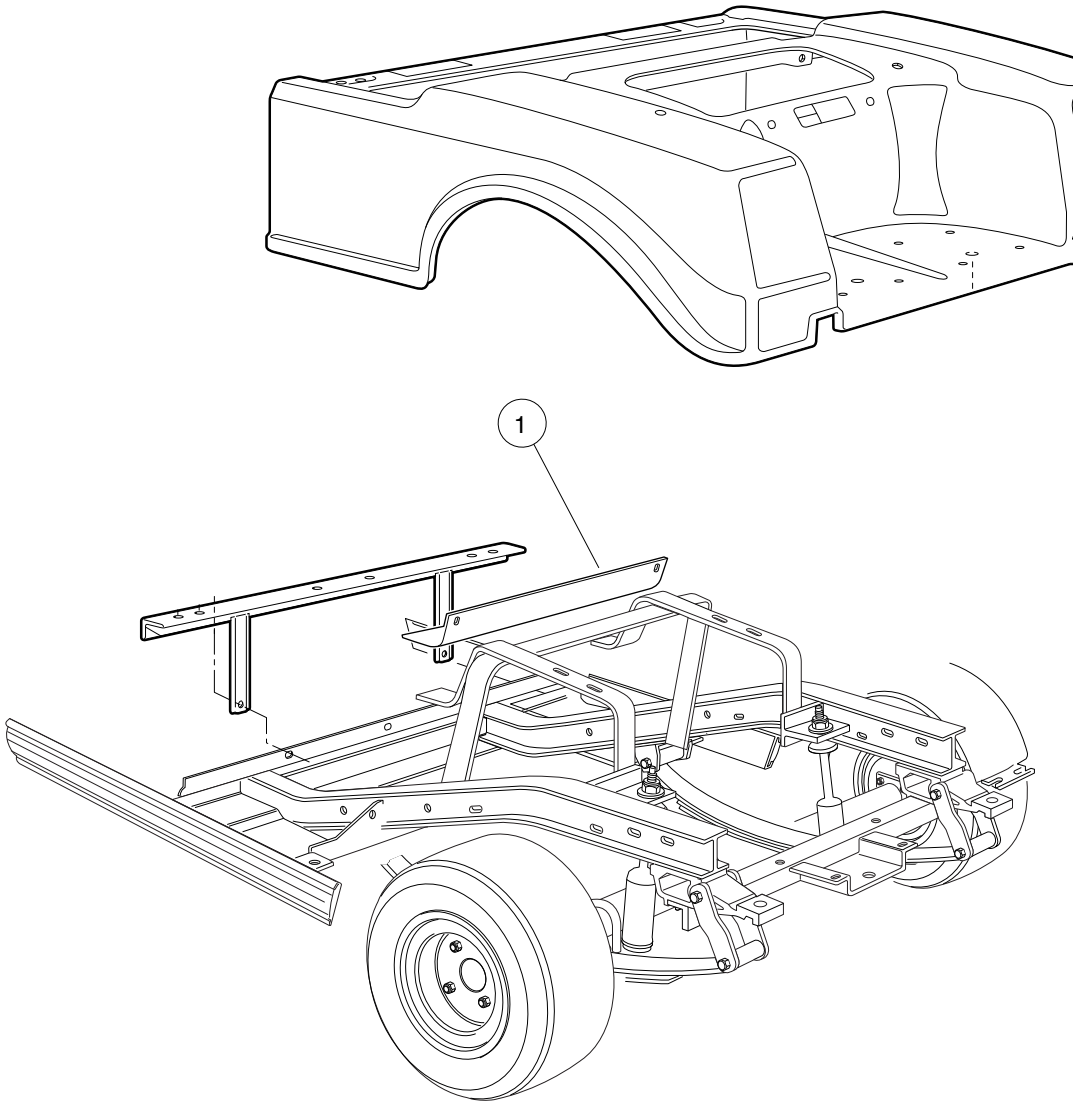
1

HEAT SHIELD – GASOLINE VEHICLES

ITEM	PART NO.	DESCRIPTION	QTY
		1 2 3 4	
1	101806901	Shield, Heat	1

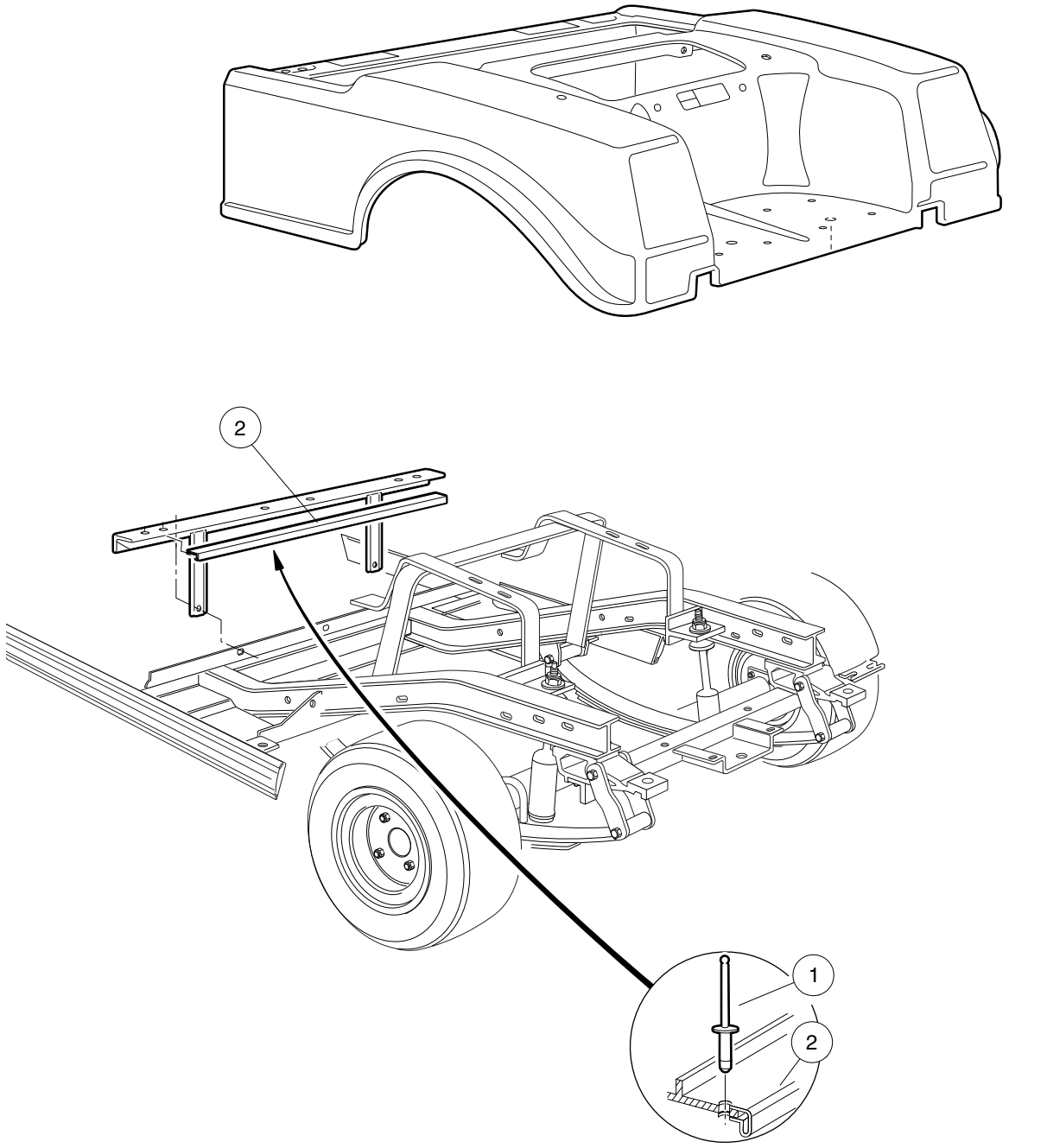

000393-001

BATTERY INSULATOR – ELECTRIC VEHICLES

ITEM	PART NO.	DESCRIPTION	QTY
		1 2 3 4	
1	1013357	Rivet, 5/32 Aluminum Pop	2
2	101837001	Battery Insulator	1

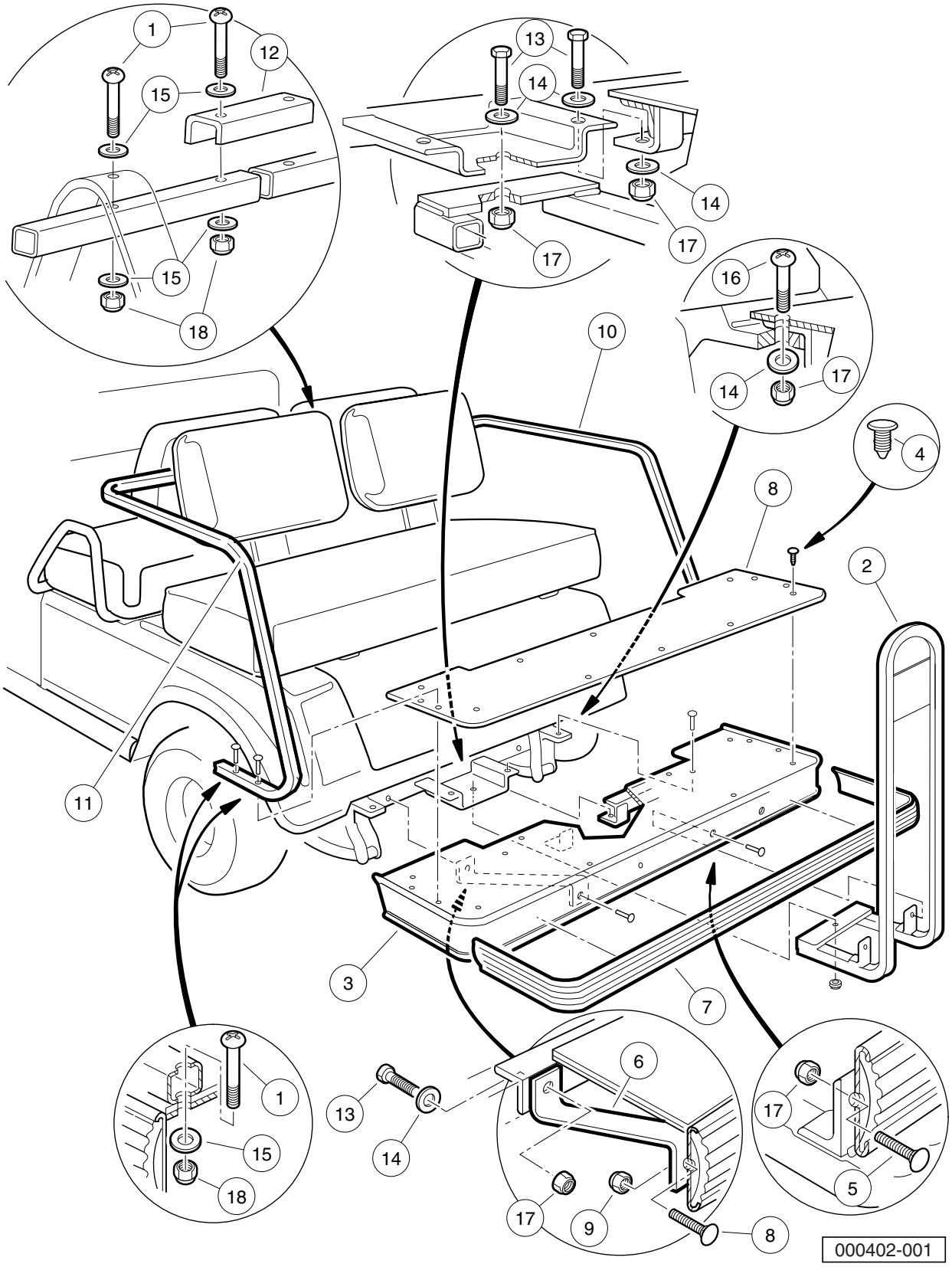
1
12
15
15
18
13
14
14
17
17
16
14
17
10
4
8
2
11
3
7
1
15
18
13
14
6
17
9
8
17
5
000402-001

REAR FOOTREST AND HANDRAILS

ITEM	PART NO.	DESCRIPTION	QTY
		1 2 3 4	
1	1011988	Screw, 1/4-20 X 2.00 Phillips Truss-Head	8
2	1016842	Rear Seat Handrail Weldment	1
3	101841101	Rear Foot Rest Asm (includes items 4 through 9)	1
4	1010434	Barrel - Plastic	8
5	1010435	Bolt, Carriage, 5/16-18 X 1.00	4
6	1016668	Connecting Bar	2
7	1016835	Bumper, Side Trim	1
8	101840901	Foot Rest Mat	1
9	7473	Locknut, 5/16-18 Nylon Insert	2
10	101841201	Armrest, Seat, Rear, Right-Hand	1
11	101841202	Armrest, Seat, Rear, Left-Hand	1
12	101841301	Armrest Bracket	1
13	1218	Screw, 5/16-18 X 1.25 Hex-Head Cap	5
14	1241	Washer, 5/16 Type A Flat	9
15	332	Washer, 1/4 Type A Narrow Flat	8
16	7410	Screw, 5/16-18 X 1.25 Truss Hd	2
17	7473	Locknut, 5/16-18 Nylon Insert	9
18	8233	Locknut, 1/4-20 Nylon Insert	8

1

G

E

WHEELS AND TIRES

FOR FRONT OR REAR

BEIGE RIMS

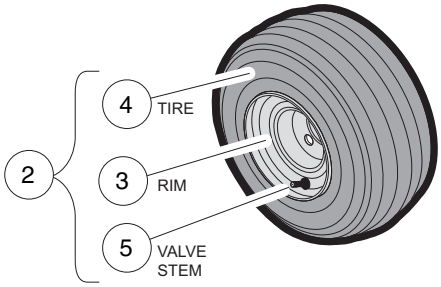

WHITE RIMS

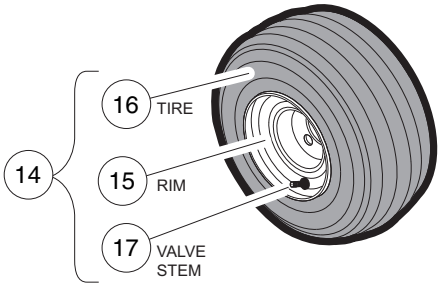

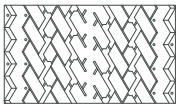

PREMIUM TREAD

FOR REAR ONLY

BEIGE RIMS

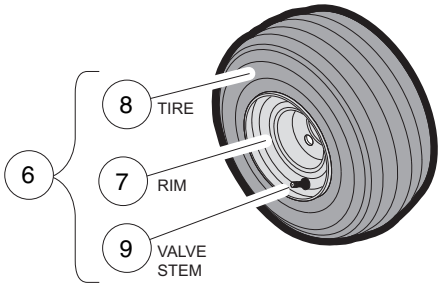

WHITE RIMS

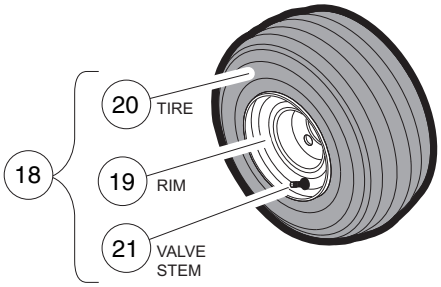

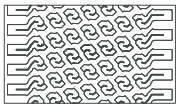

EXTRA TRACTION TREAD

FOR FRONT ONLY

BEIGE RIMS

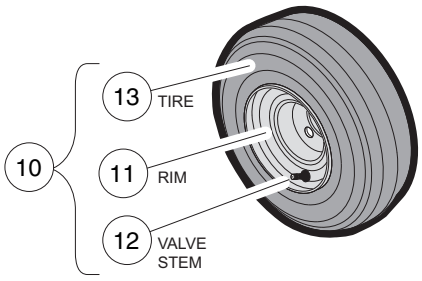

WHITE RIMS

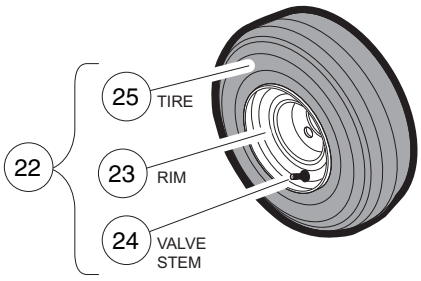

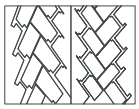

DURO HF 232 TREAD

000269-003

ITEM	PART NO.	DESCRIPTION	QTY
		1 2 3 4	
1	1010984	.500-20 Unf Lug Nut	16
2	101570506	Tire/Wheel Asm, Beige, Premium Tread, 6-ply (includes items 3 through 5)	4
3	1015707	Wheel Rim, Beige	1
4	101737002	Tire, Unmounted	1
5	7310	Valve Stem	1
6	101570507	Tire/Wheel Asm, Beige, Xtrac Tread, 6-ply (includes items 7 through 9)	2
7	1015707	Wheel Rim, Beige	1
8	101769302	Tire, Unmounted Xtrac 18 x 8.50-8	1
9	7310	Valve Stem	1
10	101570514	Tire/Wheel Asm, Beige, Duro HF 232 Tread (includes items 11 through 13)	2
11	1015707	Wheel Rim, Beige	1
12	7310	Valve Stem	1
13	****	Tire, Unmounted, 6-Ply Rated (18.5 x 8.5 - 8) (Duro)	1
14	101651406	Tire/Wheel Asm, White, Premium Tread, 6-Ply (includes items 15 through 17)	4
15	1014771	Wheel Rim, White	1
16	101737002	Tire, Unmounted	1
17	7310	Valve Stem	1
18	101651407	Tire/Wheel Asm, White, Extra-Traction, 6-Ply (includes items 19 through 21)	2
19	1014771	Wheel Rim, White	1
20	101769302	Tire, Unmounted Xtrac 18 x 8.50-8	1
21	7310	Valve Stem	1
22	101651414	Tire/Wheel Asm, White, Duro HF 232 (includes items 23 through 25)	2
23	101918402	Wheel Rim, White	1
24	7310	Valve Stem	1
25	****	Tire, Unmounted, 6-Ply Rated (18.5 x 8.5 - 8) (Duro)	1

**** Special order item available upon request.

FOR FRONT ONLY

BEIGE RIMS

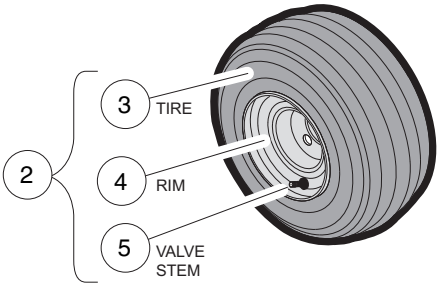

WHITE RIMS

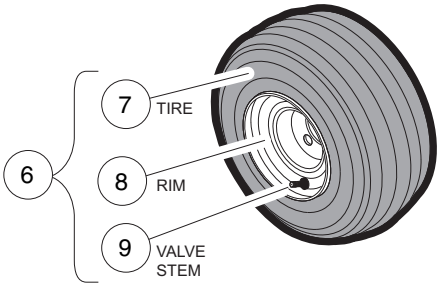

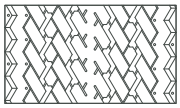

PREMIUM TREAD

000269-007

WHEELS AND TIRES (FRONT ONLY)

ITEM	PART NO.	DESCRIPTION	QTY
		1 2 3 4	
1	1010984	.500-20 Unf Lug Nut	8
2	101570509	Tire/Wheel Asm, Beige, Premium Tread, 6.5 (includes items 3 through 5)	2
3	101884901	Tire, Unmounted, Power Rib 18 x 6.50-8	1
4	101918401	Wheel Rim, Beige	1
5	7310	Valve Stem	1
6	101651409	Tire/Wheel Asm, White, Premium Tread, 6.5-inch (includes items 7 through 9)	2
7	101884901	Tire, Unmounted, Power Rib 18 x 6.50-8	1
8	101918401	Wheel Rim, Beige	1
9	7310	Valve Stem	1

2
G
E

DECALS

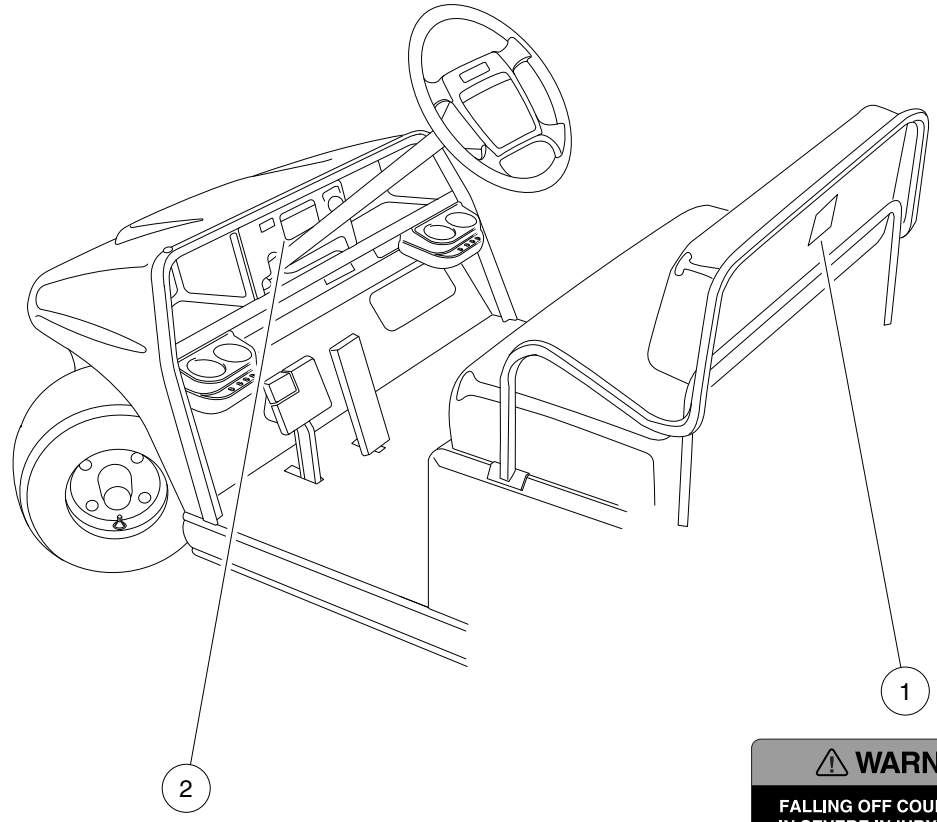

⚠ WARNING

FALLING OFF COULD RESULT IN SEVERE INJURY OR DEATH

- Remain seated with entire body inside vehicle and hold on to seat handle or handrail at all times.
- Two (2) persons per bench seat maximum.
- One (1) person per bucket seat maximum.
- Do not leave children unattended on vehicle at anytime.
- Never stand in front of or behind vehicle.

CCI 101705701

⚠ WARNING

ROLLOVER OR FALLING OFF MAY CAUSE DEATH.

- Before using vehicle, read operating instructions.
- Remain seated and hold on to seat handle while moving.
- Do not start vehicle until all occupants are seated.
- Two (2) persons per seat maximum.
- Operate from driver side only and not on public roads.
- Keep entire body inside vehicle while moving.
- Drive slowly in turns and straight up and down slopes.
- Do not leave children unattended on vehicle.
- Never operate under the influence of alcohol or drugs.
- Use brakes to reduce speed when coasting downhill.
- Never stand in front of or behind vehicle.

CCI 103205401

000374-002

DECALS – VILLAGER 6

ITEM	PART NO.	DESCRIPTION	QTY
		1 2 3 4	
1	101705701	Decal, Warning	1
2	103205401	Decal, Warning, Rollover, Utl	1

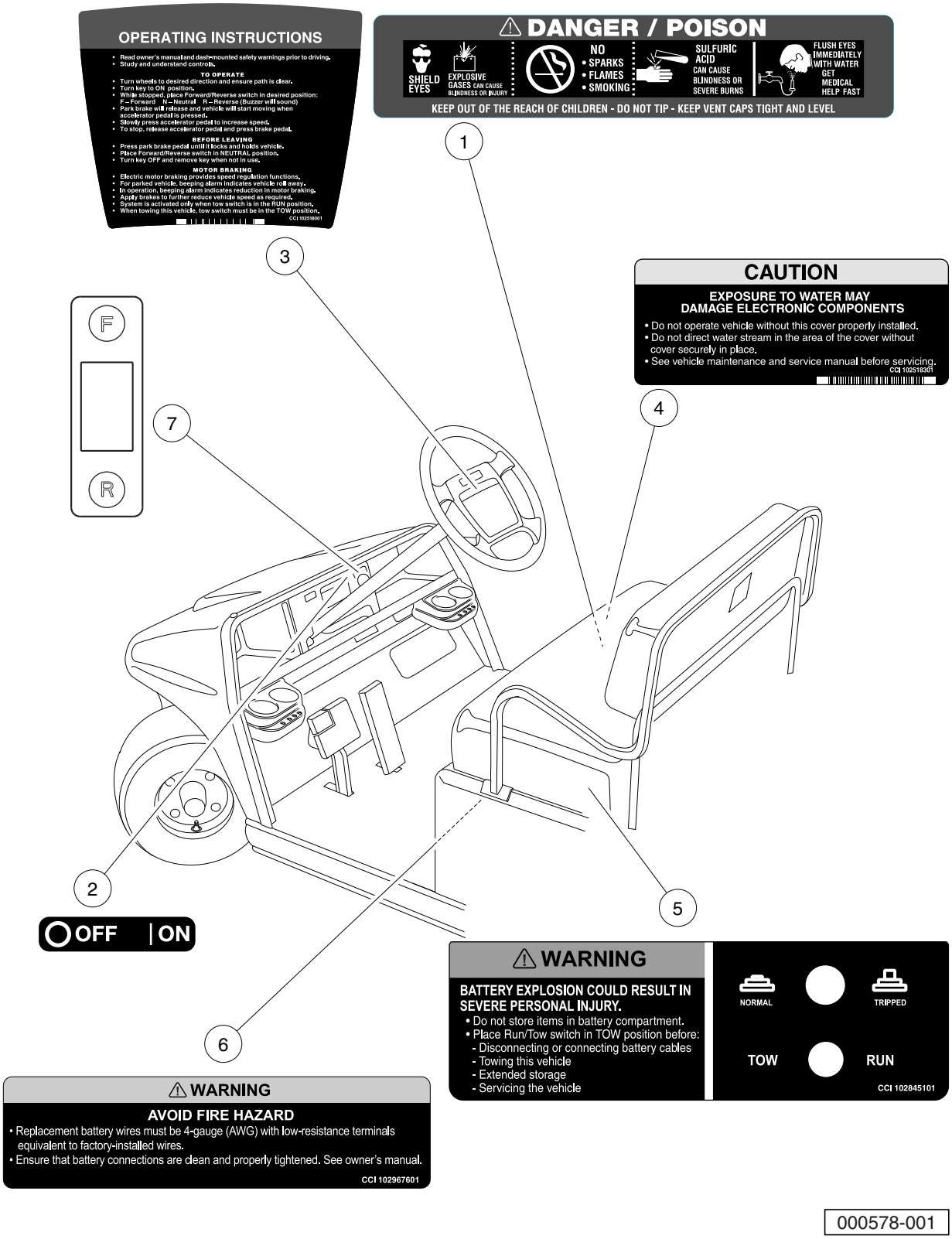
OPERATING INSTRUCTIONS
• Read owner's manual and dash-mounted safety warnings prior to driving.
• Study and understand controls.
TO OPERATE
• Turn wheels to desired direction and ensure path is clear.
• Turn key to ON position.
• While stopped, place Forward/Reverse switch in desired position:
F – Forward N – Neutral R – Reverse (Buzzer will sound)
• Park brake will release and vehicle will start moving when accelerator pedal is pressed.
• Slowly press accelerator pedal to increase speed.
• To stop, release accelerator pedal and press brake pedal.
BEFORE LEAVING
• Press park brake pedal until it locks and holds vehicle.
• Place Forward/Reverse switch in NEUTRAL position.
• Turn key OFF and remove key when not in use.
MOTOR BRAKING
• Electric motor braking provides speed regulation functions.
• For parked vehicle, beeping alarm indicates vehicle roll away.
• In operation, beeping alarm indicates reduction in motor braking.
• Apply brakes to further reduce vehicle speed as required.
• System is activated only when tow switch is in the RUN position.
• When towing this vehicle, tow switch must be in the TOW position.
CCI 102518001
DANGER / POISON
SHIELD EYES
EXPLOSIVE GASES CAN CAUSE BLINDNESS OR INJURY
NO • SPARKS • FLAMES • SMOKING
SULFURIC ACID CAN CAUSE BLINDNESS OR SEVERE BURNS
FLUSH EYES IMMEDIATELY WITH WATER GET MEDICAL HELP FAST
KEEP OUT OF THE REACH OF CHILDREN - DO NOT TIP - KEEP VENT CAPS TIGHT AND LEVEL
CAUTION
EXPOSURE TO WATER MAY DAMAGE ELECTRONIC COMPONENTS
• Do not operate vehicle without this cover properly installed.
• Do not direct water stream in the area of the cover without cover securely in place.
• See vehicle maintenance and service manual before servicing.
CCI 102518301
F
R
OFF ON
WARNING
BATTERY EXPLOSION COULD RESULT IN SEVERE PERSONAL INJURY.
• Do not store items in battery compartment.
• Place Run/Tow switch in TOW position before:
- Disconnecting or connecting battery cables
- Towing this vehicle
- Extended storage
- Servicing the vehicle
NORMAL
TRIPPED
TOW
RUN
CCI 102845101
WARNING
AVOID FIRE HAZARD
• Replacement battery wires must be 4-gauge (AWG) with low-resistance terminals equivalent to factory-installed wires.
• Ensure that battery connections are clean and properly tightened. See owner's manual.
CCI 102967601
1
2
3
4
5
6
7

000578-001

DECALS – VILLAGER 6 IQ PLUS VEHICLES

ITEM	PART NO.	DESCRIPTION	QTY
		1 2 3 4	
1	1013677	Decal, Battery Danger	1
2	101825101	Decal, Off/On	1
3	102518001	Decal, Operating Instr, Elec	1
4	102518301	Decal, Caution, Electrical Component Cover	1
5	102845101	Decal, Tow Switch	1
6	102967601	Decal, Warning, 4 Gauge Wire	1
7	103210301	Decal, Forward/Reverse, Electric	1

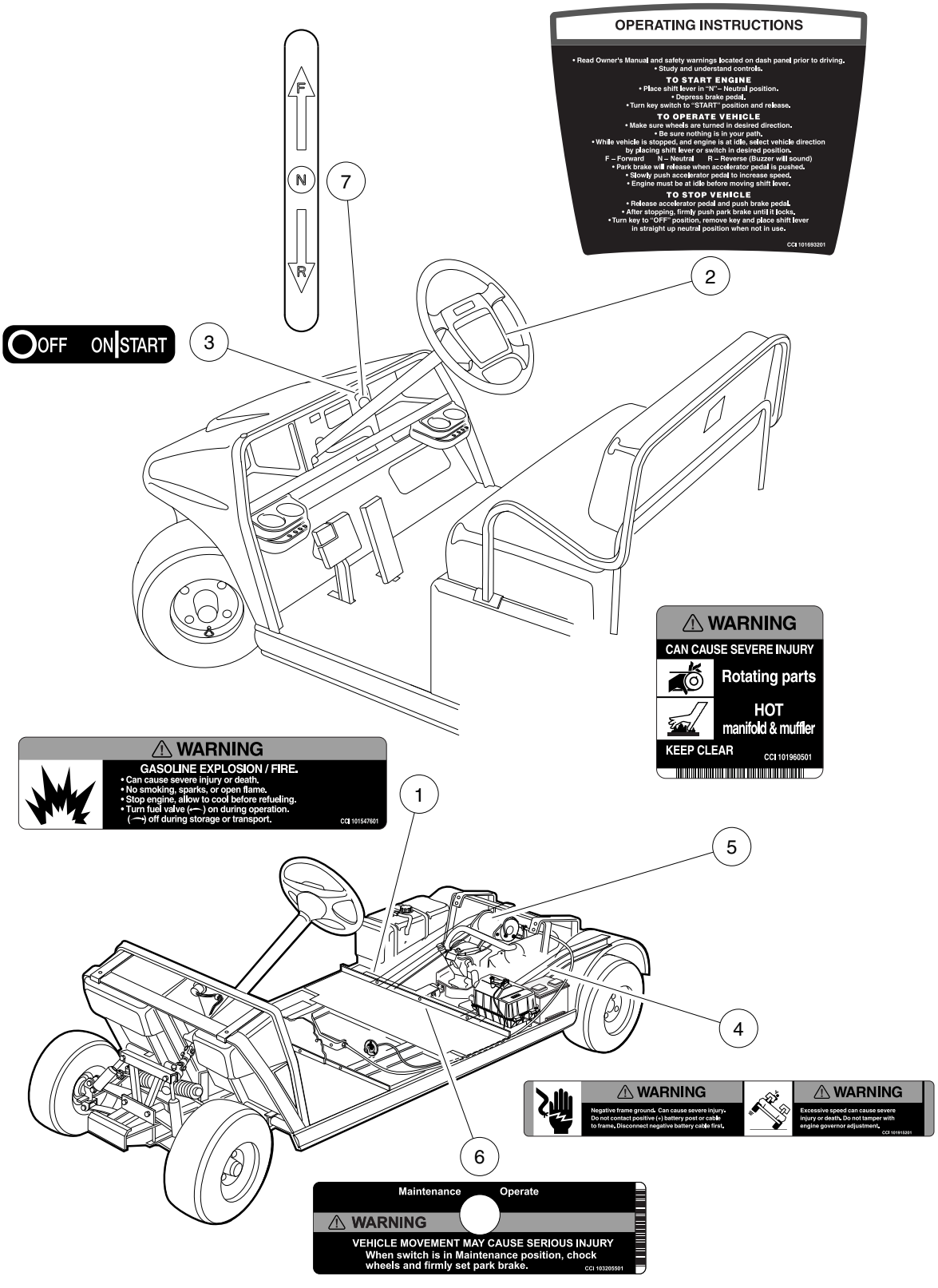
OPERATING INSTRUCTIONS
• Read Owner's Manual and safety warnings located on dash panel prior to driving.
• Study and understand controls.
TO START ENGINE
• Place shift lever in "N" – Neutral position.
• Depress brake pedal.
• Turn key switch to "START" position and release.
TO OPERATE VEHICLE
• Make sure wheels are turned in desired direction.
• Be sure nothing is in your path.
• While vehicle is stopped, and engine is at idle, select vehicle direction by placing shift lever or switch in desired position.
F – Forward N – Neutral R – Reverse (Buzzer will sound)
• Park brake will release when accelerator pedal is pushed.
• Slowly push accelerator pedal to increase speed.
• Engine must be at idle before moving shift lever.
TO STOP VEHICLE
• Release accelerator pedal and push brake pedal.
• After stopping, firmly push park brake until it locks.
• Turn key to "OFF" position, remove key and place shift lever in straight up neutral position when not in use.
CCI 101693201
F
N
R
7
2
OFF ON START
3
⚠ WARNING
CAN CAUSE SEVERE INJURY
Rotating parts
HOT
manifold & muffler
KEEP CLEAR
CCI 101960501
⚠ WARNING
GASOLINE EXPLOSION / FIRE.
• Can cause severe injury or death.
• No smoking, sparks, or open flame.
• Stop engine, allow to cool before refueling.
• Turn fuel valve (⟵) on during operation.
(⟶) off during storage or transport.
CCI 101547601
1
5
4
⚠ WARNING
Negative frame ground. Can cause severe injury. Do not contact positive (+) battery post or cable to frame. Disconnect negative battery cable first.
⚠ WARNING
Excessive speed can cause severe injury or death. Do not tamper with engine governor adjustment.
CCI 101915201
6
Maintenance
Operate
⚠ WARNING
VEHICLE MOVEMENT MAY CAUSE SERIOUS INJURY
When switch is in Maintenance position, chock wheels and firmly set park brake.
CCI 103205501

000579-001

DECALS – VILLAGER 6 GASOLINE VEHICLES

ITEM	PART NO.	DESCRIPTION	QTY
		1 2 3 4	
1	101547601	Decal, Gasoline Explosion/Fire Warning	1
2	101693201	Decal, Operating Instructions, Key-Start	1
3	101825102	Decal, Off/On/Start	1
4	101915201	Decal, Frame Ground and Governor Warning	1
5	101960501	Decal, Rotating Parts/Hot Manifold	1
6	103205501	Decal, Run/Service Switch	1
7	103210201	Decal, Forward/Reverse, Gas	1

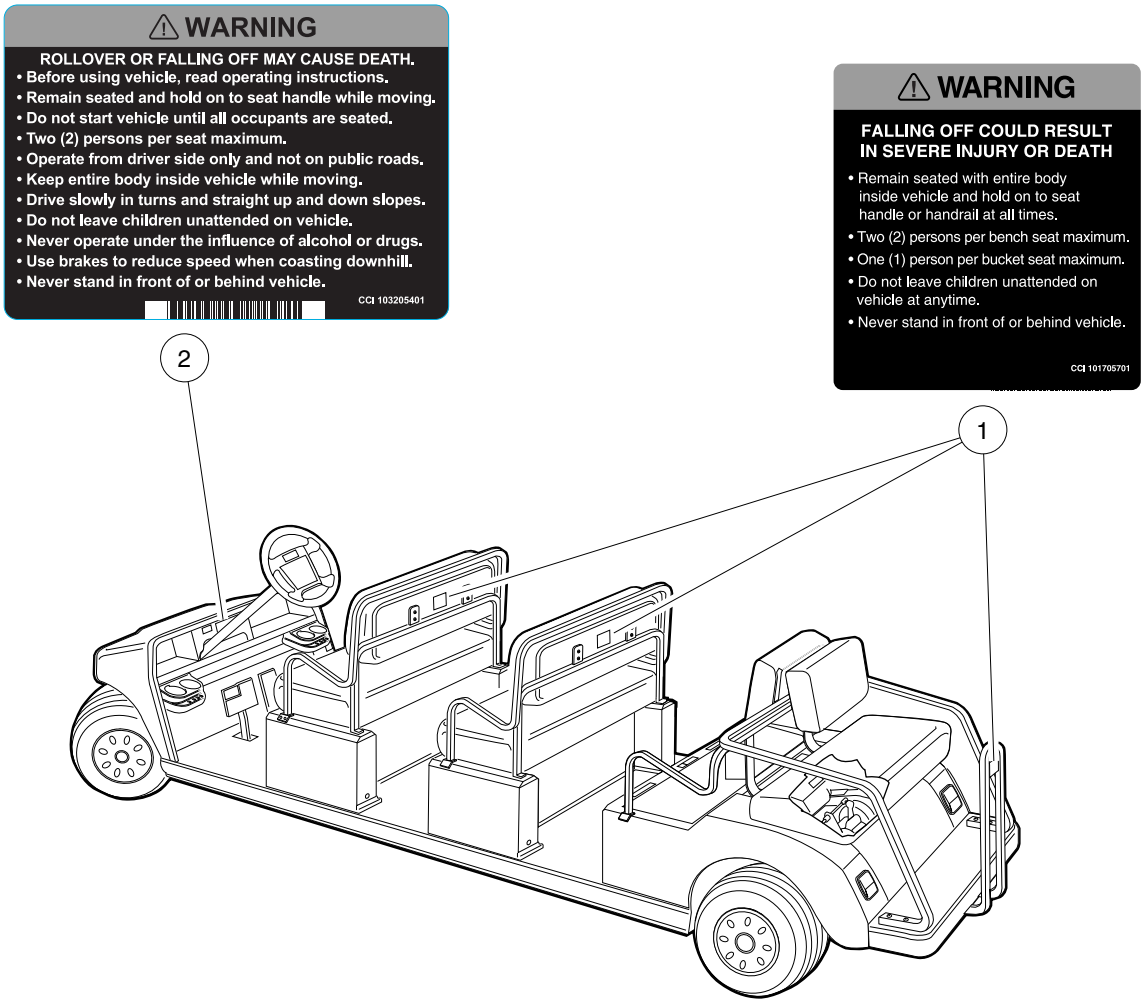
⚠ WARNING
ROLLOVER OR FALLING OFF MAY CAUSE DEATH.
• Before using vehicle, read operating instructions.
• Remain seated and hold on to seat handle while moving.
• Do not start vehicle until all occupants are seated.
• Two (2) persons per seat maximum.
• Operate from driver side only and not on public roads.
• Keep entire body inside vehicle while moving.
• Drive slowly in turns and straight up and down slopes.
• Do not leave children unattended on vehicle.
• Never operate under the influence of alcohol or drugs.
• Use brakes to reduce speed when coasting downhill.
• Never stand in front of or behind vehicle.
CCI 103205401
⚠ WARNING
FALLING OFF COULD RESULT IN SEVERE INJURY OR DEATH
• Remain seated with entire body inside vehicle and hold on to seat handle or handrail at all times.
• Two (2) persons per bench seat maximum.
• One (1) person per bucket seat maximum.
• Do not leave children unattended on vehicle at anytime.
• Never stand in front of or behind vehicle.
CCI 101705701
2
1

000377-002

DECALS – VILLAGER 8

ITEM	PART NO.	DESCRIPTION	QTY
		1 2 3 4	
1	101705701	Decal, Warning	3
2	103205401	Decal, Warning, Rollover, Utl	1

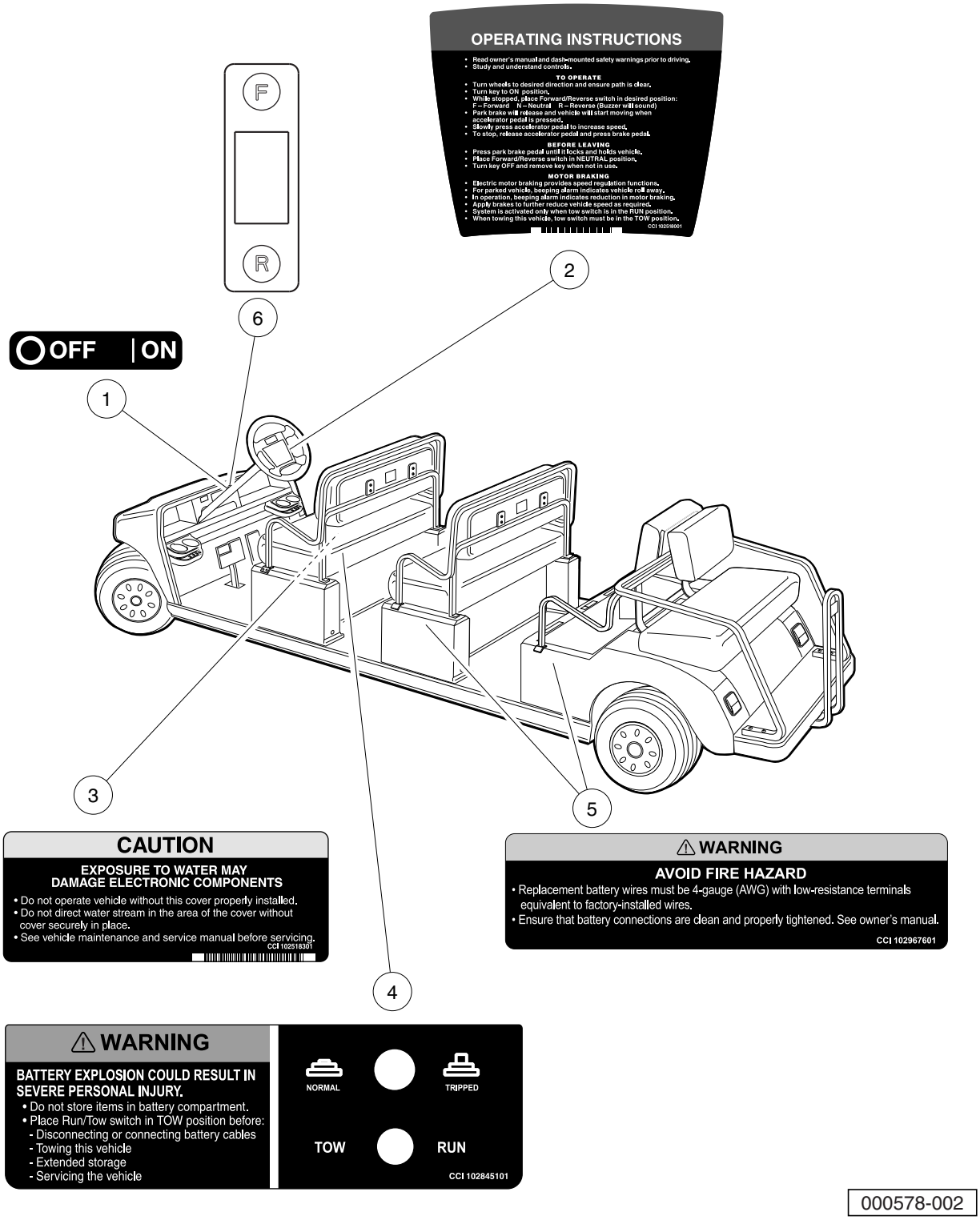
OPERATING INSTRUCTIONS
• Read owner's manual and dash-mounted safety warnings prior to driving.
• Study and understand controls.
TO OPERATE
• Turn wheels to desired direction and ensure path is clear.
• Turn key to ON position.
• While stopped, place Forward/Reverse switch in desired position:
F – Forward N – Neutral R – Reverse (Buzzer will sound)
• Park brake will release and vehicle will start moving when accelerator pedal is pressed.
• Slowly press accelerator pedal to increase speed.
• To stop, release accelerator pedal and press brake pedal.
BEFORE LEAVING
• Press park brake pedal until it locks and holds vehicle.
• Place Forward/Reverse switch in NEUTRAL position.
• Turn key OFF and remove key when not in use.
MOTOR BRAKING
• Electric motor braking provides speed regulation functions.
• For parked vehicle, beeping alarm indicates vehicle roll away.
• In operation, beeping alarm indicates reduction in motor braking.
• Apply brakes to further reduce vehicle speed as required.
• System is activated only when tow switch is in the RUN position.
• When towing this vehicle, tow switch must be in the TOW position.
CCI 10259001
F
R
OFF
ON
1
2
3
4
5
6
CAUTION
EXPOSURE TO WATER MAY DAMAGE ELECTRONIC COMPONENTS
• Do not operate vehicle without this cover properly installed.
• Do not direct water stream in the area of the cover without cover securely in place.
• See vehicle maintenance and service manual before servicing.
CCI 102518301
⚠ WARNING
AVOID FIRE HAZARD
• Replacement battery wires must be 4-gauge (AWG) with low-resistance terminals equivalent to factory-installed wires.
• Ensure that battery connections are clean and properly tightened. See owner's manual.
CCI 102967601
⚠ WARNING
BATTERY EXPLOSION COULD RESULT IN SEVERE PERSONAL INJURY.
• Do not store items in battery compartment.
• Place Run/Tow switch in TOW position before:
- Disconnecting or connecting battery cables
- Towing this vehicle
- Extended storage
- Servicing the vehicle
NORMAL
TRIPPED
TOW
RUN
CCI 102845101

000578-002

DECALS – VILLAGER 8 IQ PLUS VEHICLES

ITEM	PART NO.	DESCRIPTION	QTY
		1 2 3 4	
1	101825101	Decal, Off/On	1
2	102518001	Decal, Operating Instr, Elec	1
3	102518301	Decal, Caution, Electrical Component Cover	1
4	102845101	Decal, Tow Switch	1
5	102967601	Decal, Warning, 4 Gauge Wire	2
6	103210301	Decal, Forward/Reverse, Electric	1

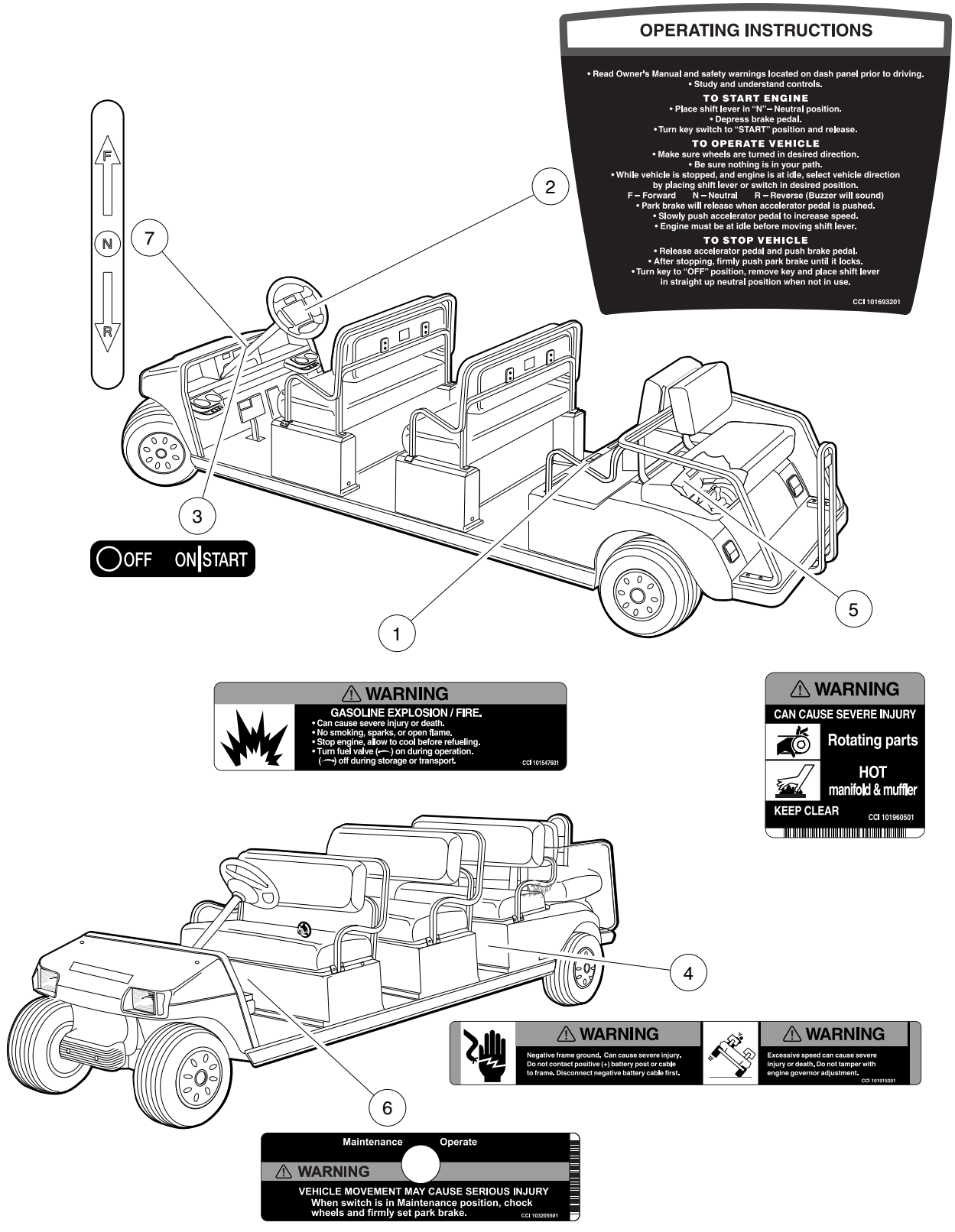
OPERATING INSTRUCTIONS
• Read Owner's Manual and safety warnings located on dash panel prior to driving.
• Study and understand controls.
TO START ENGINE
• Place shift lever in "N" – Neutral position.
• Depress brake pedal.
• Turn key switch to "START" position and release.
TO OPERATE VEHICLE
• Make sure wheels are turned in desired direction.
• Be sure nothing is in your path.
• While vehicle is stopped, and engine is at idle, select vehicle direction by placing shift lever or switch in desired position.
F – Forward N – Neutral R – Reverse (Buzzer will sound)
• Park brake will release when accelerator pedal is pushed.
• Slowly push accelerator pedal to increase speed.
• Engine must be at idle before moving shift lever.
TO STOP VEHICLE
• Release accelerator pedal and push brake pedal.
• After stopping, firmly push park brake until it locks.
• Turn key to "OFF" position, remove key and place shift lever in straight up neutral position when not in use.
CCI 101693201
F
N
R
7
2
3
OFF ON START
1
5
WARNING
GASOLINE EXPLOSION / FIRE.
• Can cause severe injury or death.
• No smoking, sparks, or open flame.
• Stop engine, allow to cool before refueling.
• Turn fuel valve (⟵) on during operation.
(⟶) off during storage or transport.
CCI 101547601
WARNING
CAN CAUSE SEVERE INJURY
Rotating parts
HOT
manifold & muffler
KEEP CLEAR
CCI 101960501
4
WARNING
Negative frame ground. Can cause severe injury.
Do not contact positive (+) battery post or cable to frame. Disconnect negative battery cable first.
WARNING
Excessive speed can cause severe injury or death. Do not tamper with engine governor adjustment.
CCI 101915201
6
Maintenance
Operate
WARNING
VEHICLE MOVEMENT MAY CAUSE SERIOUS INJURY
When switch is in Maintenance position, chock wheels and firmly set park brake.
CCI 103205501

000579-002

DECALS – VILLAGER 8 GASOLINE VEHICLES

ITEM	PART NO.	DESCRIPTION	QTY
		1 2 3 4	
1	101547601	Decal, Gasoline Explosion/Fire Warning	1
2	101693201	Decal, Operating Instructions, Key-Start	1
3	101825102	Decal, Off/On/Start	1
4	101915201	Decal, Frame Ground and Governor Warning	1
5	101960501	Decal, Rotating Parts/Hot Manifold	2
6	103205501	Decal, Run/Service Switch	1
7	103210201	Decal, Forward/Reverse, Gas	1

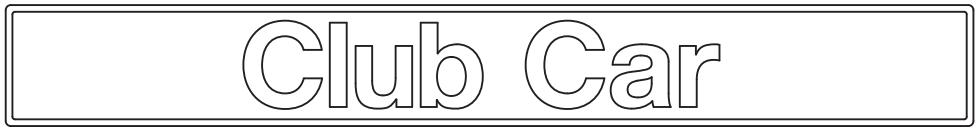

1

(ON FRONT OF COWL)

2

(ON REAR BODY)

3

(ON REAR BODY)

000380-001

LOGO DECALS – VILLAGER 6 AND 8

ITEM	PART NO.	DESCRIPTION	QTY
		1 2 3 4	
1	1014198	Nameplate Kit (gold)	1
2	102158701	Decal, Villager	2
3	103234302	Decal, Badge, IR - Gold	2

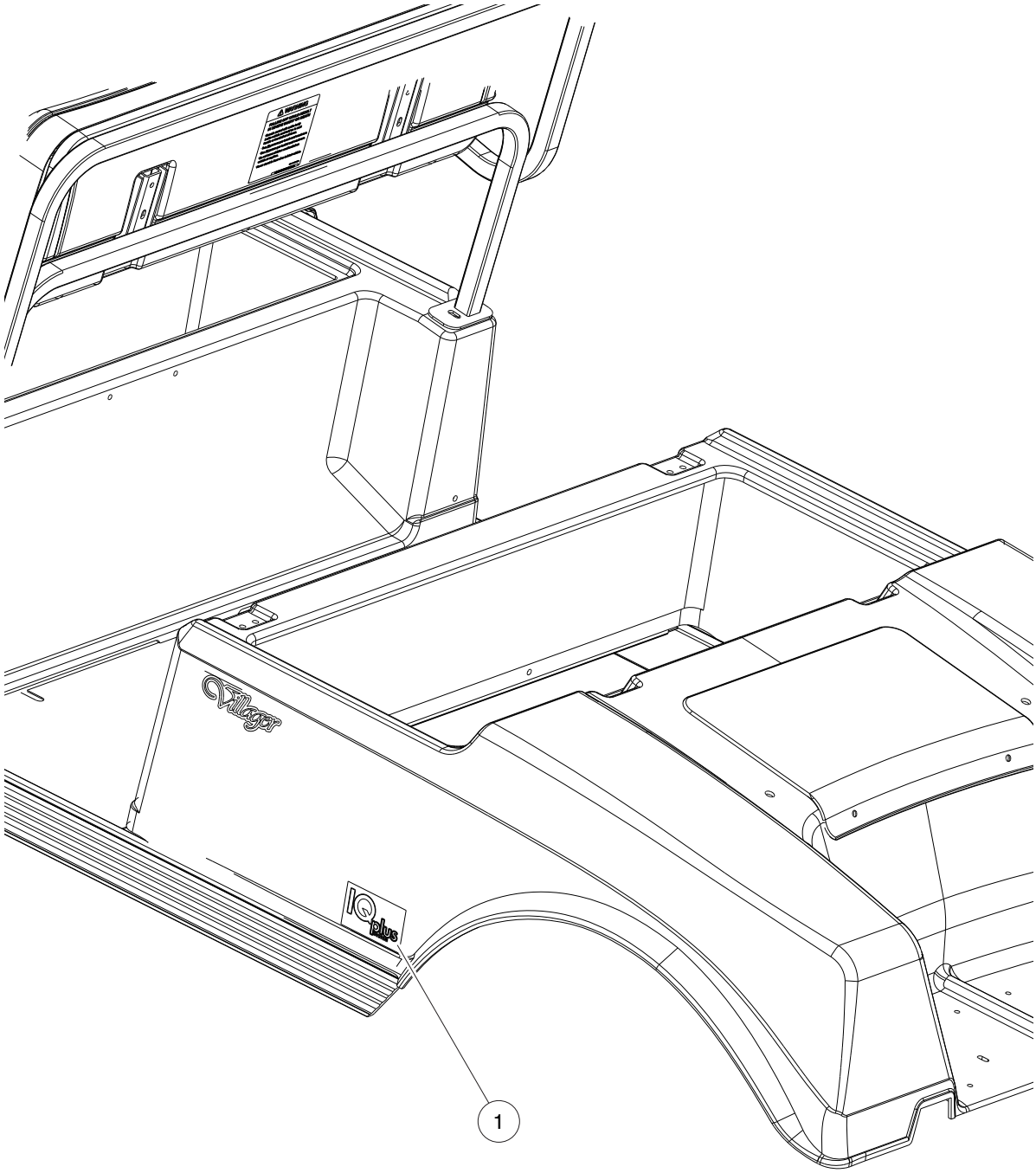

000422-001

IQ PLUS LOGO DECAL – IQ PLUS VEHICLES

ITEM	PART NO.	DESCRIPTION	QTY
1	102842401	1 2 3 4 Decal, IQ Plus	2

3

G

E

BRAKES, PEDALS, AND CABLES

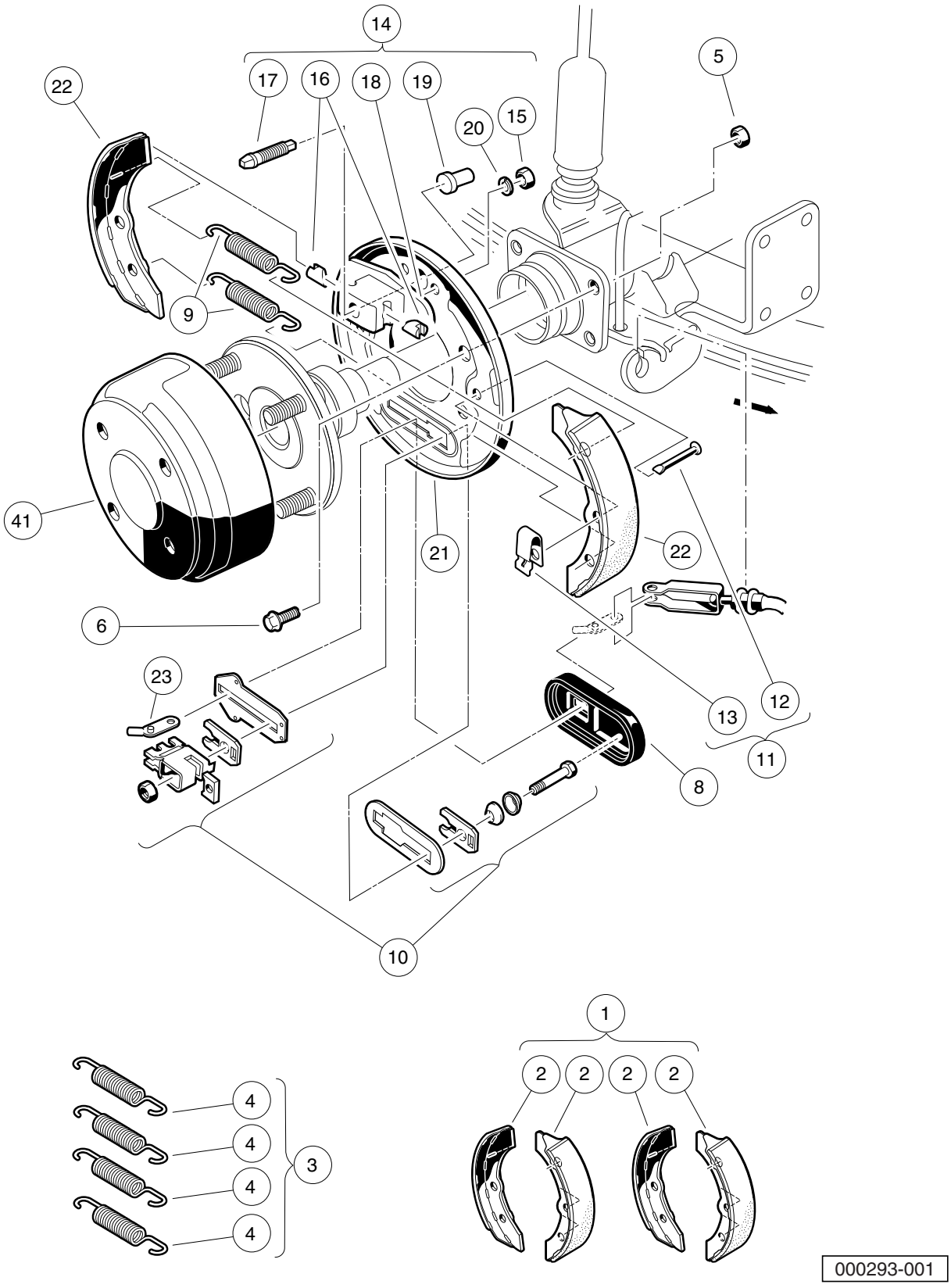
14
17
16
18
19
20
15
5
22
9
41
21
22
6
23
13
12
11
8
10
1
2
2
2
2
4
4
4
4
3
000293-001

REAR BRAKE ASSEMBLY

ITEM	PART NO.	DESCRIPTION	QTY
		1 2 3 4	
1	101146302	Kit, Non-Asbestos Brake Shoe (includes item 2)	1
2	N/A	Shoe Brake Manual Adj	4
3	1011464	Package, Brake Spring (includes item 4)	1
4	N/A	Brake Spring	4
5	1013924	Nut, 5/16-24 Hex Head Cone	8
6	1014153	Bolt, Brake Cluster Mounting	8
7	1016557	Cluster, Brake, Driver-Side (includes items 8 through 23)	1
8	1010850	Dust Cover	1
9	N/A	Brake Spring	2
10	1011465	Kit, Brake Actuator	1
11	1011466	Kit, Shoe Retainer (includes items 12 and 13)	1
12	N/A	Pin	2
13	N/A	Shoe Clamp Spring	2
14	1011467	Kit, Anchor Body (includes items 15 through 20)	1
15	1011114	Nut, M6-1.00 Hex	2
16	N/A	Anchor Piston	2
17	N/A	Adjustment Bolt	1
18	N/A	Anchor Body Component	1
19	1011303	Adjustment Bolt Cap	1
20	451	Lockwasher, 1/4 Helical Split	2
21	N/A	Backing Plate, Left-Hand	1
22	N/A	Shoe Brake Manual Adj	2
23	N/A	Arm, Brake Lever	1
24	1016573	Cluster, Brake, Passenger-Side (includes items 25 through 40)	1
25	1010850	Dust Cover	1
26	N/A	Backing Plate, Right-Hand	1
27	N/A	Brake Spring	2
28	1011465	Kit, Brake Actuator	1
29	1011466	Kit, Shoe Retainer (includes items 30 and 31)	1
30	N/A	Pin	2
31	N/A	Shoe Clamp Spring	2
32	1011467	Kit, Anchor Body (includes items 33 through 38)	1
33	1011114	Nut, M6-1.00 Hex	2
34	N/A	Anchor Piston	2
35	N/A	Adjustment Bolt	1
36	N/A	Anchor Body Component	1
37	1011303	Adjustment Bolt Cap	1
38	451	Lockwasher, 1/4 Helical Split	2
39	N/A	Shoe Brake Manual Adj	2
40	N/A	Arm, Brake Lever	1
41	101791101	Drum without Center Hole, Brake	2
		Note: Passenger-side brake cluster not shown. Components have a similar appearance to driver-side brake cluster components.	

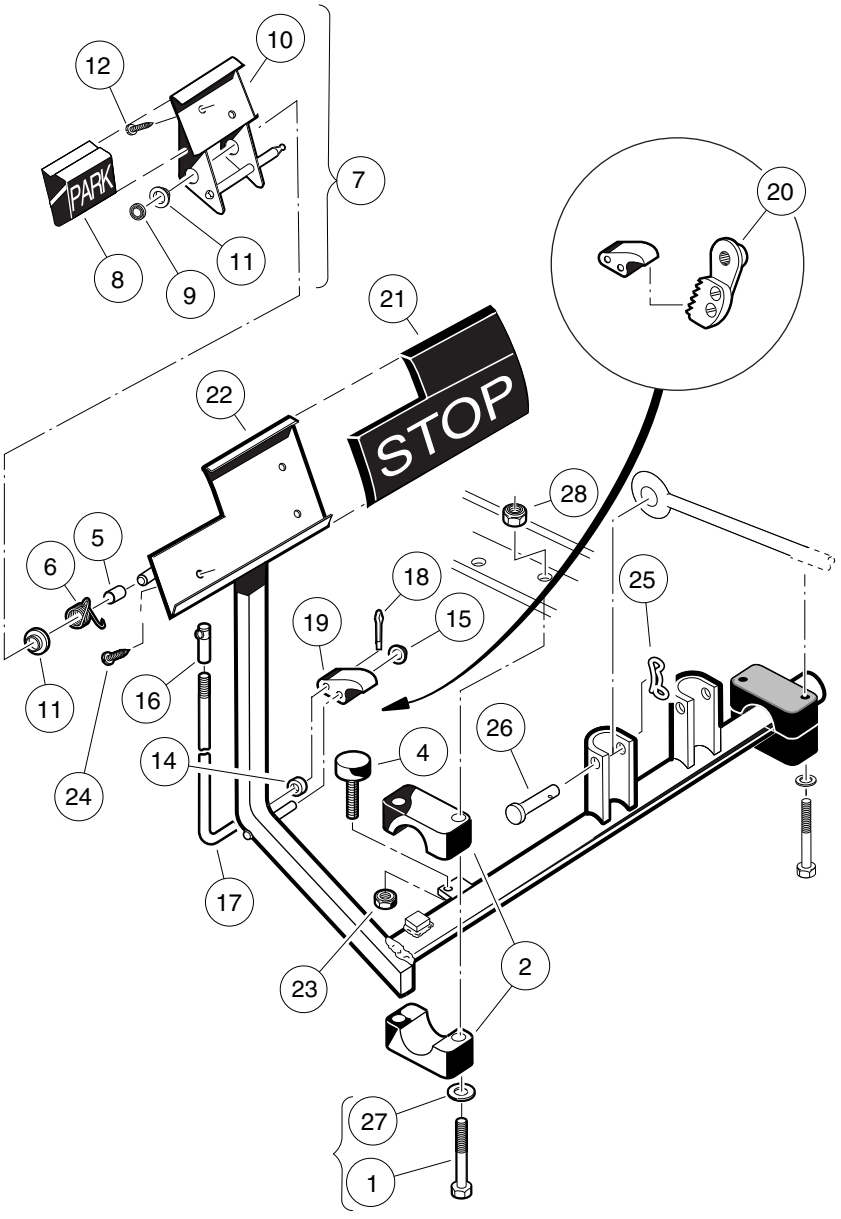

000187-002

BRAKE PEDAL ASSEMBLY – IQ PLUS VEHICLES

ITEM	PART NO.	DESCRIPTION	QTY
		1 2 3 4	
1	1010921	Screw, 5/16-18 X 2.50 Hex Cap	4
2	1011402	Package, Brake Mounting Block	1
3	N/A	Subasm, Pedal Group, 4-Wheel Brake (includes items 4 through 24)	1
4	1010878	Bumper, Rubber	1
5	1010927	Hill Brake Spacer	1
6	1010933	Spring, Hill Brake Torsion	1
7	1011418	Kit, Hill Brake Pedal (includes items 8 through 12)	1
8	1013870	Pad, Hill Brake	1
9	1013876	Pushnut, 3/8	1
10	N/A	Hill Brake Weld Assembly	1
11	1032	Bushing, Nylon	2
12	7716	Screw, #10-16 Type AB, Sheet Metal	2
13	101187702	Kit, Hill Brake Latch (includes items 14 through 20)	1
14	1010805	Sleeve, Hill Brake Rod	1
15	1010877	Pushnut, 3/8	1
16	1010932	Ball Joint, 1/4-28	1
17	N/A	Rod, Hill Brake	1
18	1017029	Pin, Cotter, 7/64 x 1/2 Stainless-Steel	1
19	N/A	Pawl, Hill Brake	1
20	N/A	Ratchet Assembly	1
21	1013869	Pad, Brake Pedal	1
22	N/A	Brake Pedal Weldment	1
23	1028	Nut, 1/4-20 Hex	1
24	7716	Screw, #10-16 Type AB, Sheet Metal	3
25	102323101	Pin, Bow Tie Locking	2
26	102323201	Pin, 3/8 X 1-5/16 Clevis	2
27	1241	Washer, 5/16 Type A Flat	4
28	7473	Locknut, 5/16-18 Nylon Insert	4

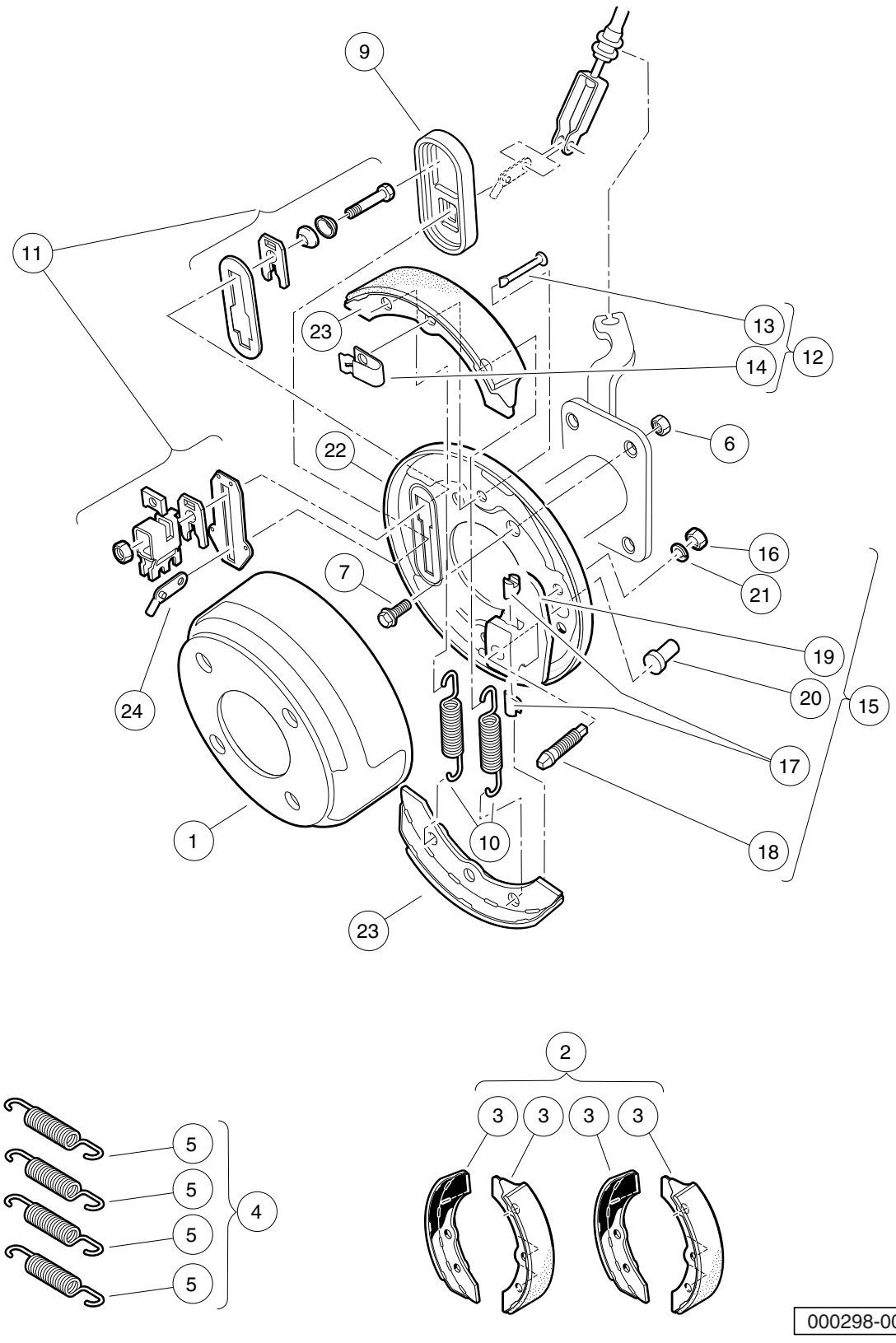
9
11
23
13
12
14
6
22
16
21
7
19
20
15
24
17
1
10
18
23
2
3
3
3
3
5
5
5
5
4
000298-001

FRONT BRAKE ASSEMBLY

ITEM	PART NO.	DESCRIPTION	QTY
		1 2 3 4	
1	1011137	Drum, Brake	2
2	101146302	Kit, Non-Asbestos Brake Shoe (includes item 3)	1
3	N/A	Shoe Brake Manual Adj	4
4	1011464	Package, Brake Spring (includes item 5)	1
5	N/A	Brake Spring	4
6	1013924	Nut, 5/16-24 Hex Head Cone	8
7	1014153	Bolt, Brake Cluster Mounting	8
8	1016557	Cluster, Brake, Driver-Side (includes items 9 through 24)	1
9	1010850	Dust Cover	1
10	N/A	Brake Spring	2
11	1011465	Kit, Brake Actuator	1
12	1011466	Kit, Shoe Retainer (includes items 13 and 14)	1
13	N/A	Pin	2
14	N/A	Shoe Clamp Spring	2
15	1011467	Kit, Anchor Body (includes items 16 through 21)	1
16	1011114	Nut, M6-1.00 Hex	2
17	N/A	Anchor Piston	2
18	N/A	Adjustment Bolt	1
19	N/A	Anchor Body Component	1
20	1011303	Adjustment Bolt Cap	1
21	451	Lockwasher, 1/4 Helical Split	2
22	N/A	Backing Plate, Left-Hand	1
23	N/A	Shoe Brake Manual Adj	2
24	N/A	Arm, Brake Lever	1
25	1016573	Cluster, Brake, Passenger-Side (includes items 26 through 41)	1
26	1010850	Dust Cover	1
27	N/A	Backing Plate, Right-Hand	1
28	N/A	Brake Spring	2
29	1011465	Kit, Brake Actuator	1
30	1011466	Kit, Shoe Retainer (includes items 31 and 32)	1
31	N/A	Pin	2
32	N/A	Shoe Clamp Spring	2
33	1011467	Kit, Anchor Body (includes items 34 through 39)	1
34	1011114	Nut, M6-1.00 Hex	2
35	N/A	Anchor Piston	2
36	N/A	Adjustment Bolt	1
37	N/A	Anchor Body Component	1
38	1011303	Adjustment Bolt Cap	1
39	451	Lockwasher, 1/4 Helical Split	2
40	N/A	Shoe Brake Manual Adj	2
41	N/A	Arm, Brake Lever	1
		Note: Passenger-side brake cluster not shown. Components have a similar appearance to driver-side brake cluster components.	

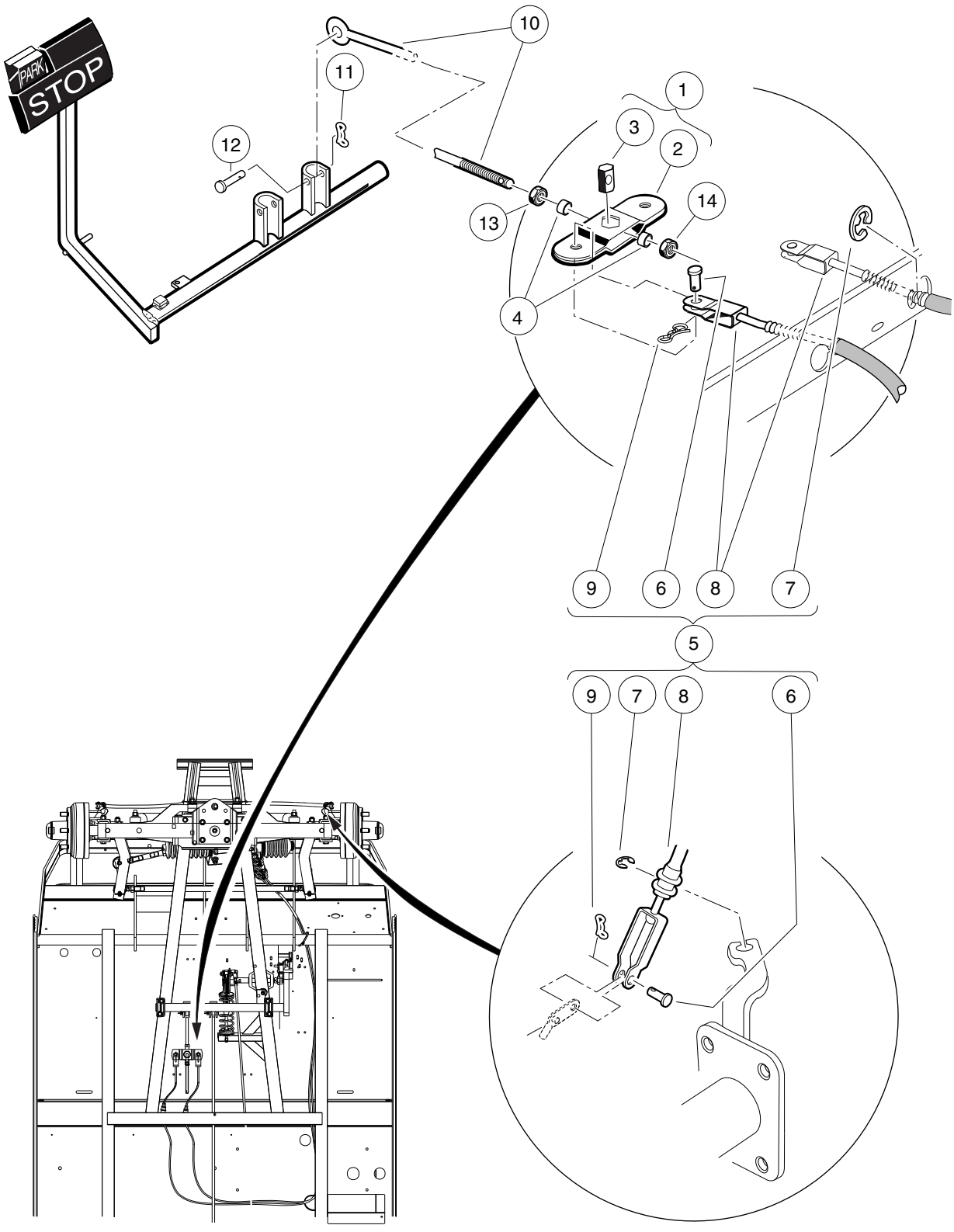

000294-001

FRONT BRAKE CABLES AND EQUALIZER

ITEM	PART NO.	DESCRIPTION	QTY
		1 2 3 4	
1	1017211	Kit, Equalizer and Pivot Limiter (includes items 2 and 3)	1
2	N/A	Equalizer Weld Assembly	1
3	N/A	Equalizer, Pivot Limiter	1
4	101865301	Spacer	2
5	101874601	Kit, Brake Cable (includes items 6 through 9)	1
6	1010829	Pin, Clevis, 5/16 X 3/4	4
7	1011779	E-Clip, 1/2	4
8	N/A	Brake Cable	2
9	102292801	Pin, Bow Tie Locking - .072	4
10	101953106	Rod, Equalizer, 9.75"	1
11	102323101	Pin, Bow Tie Locking	1
12	102323201	Pin, 3/8 X 1-5/16 Clevis	1
13	1242	Nut, 5/16-18 Hex	1
14	7473	Locknut, 5/16-18 Nylon Insert	1

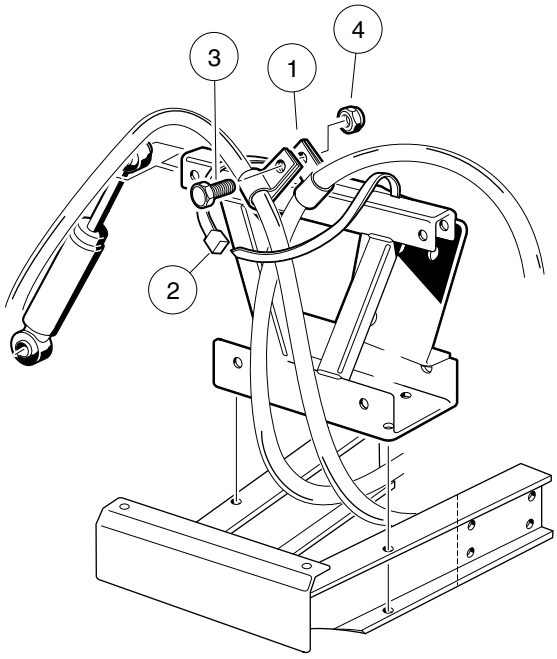

000305-001

FRONT BRAKE CABLE CLIPS AND HARDWARE – VEHICLES WITH FRONT-WHEEL BRAKES

ITEM	PART NO.	DESCRIPTION	QTY
		1 2 3 4	
1	101935301	Clamp, Brake Cable	2
2	102025401	Tie Wrap, Heavy Duty	1
3	320	Screw, 3/8-16 X 1.00 Hex-Head Cap	1
4	8754	Locknut, 3/8-16 Hex	1

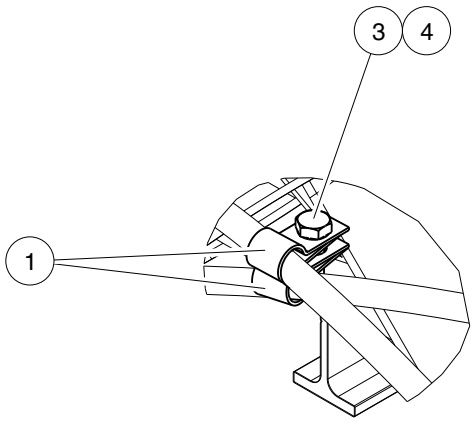

DETAIL G

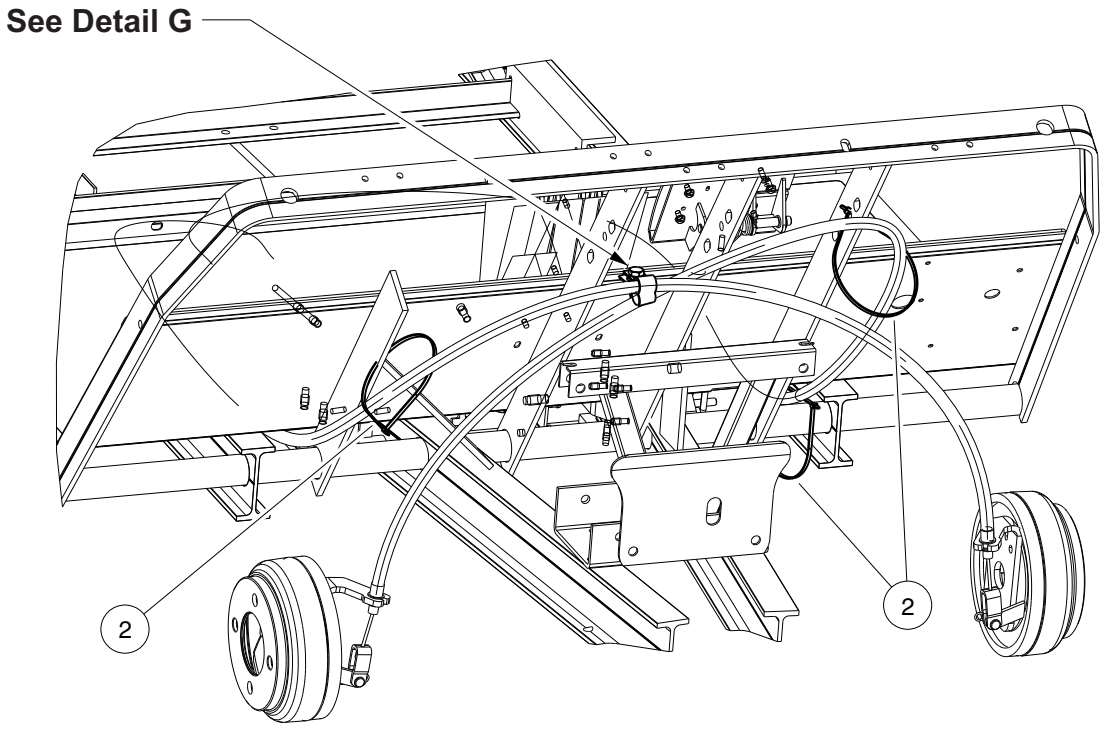

000305-002

FRONT BRAKE CABLE CLIPS – IQ PLUS VEHICLES

ITEM	PART NO.	DESCRIPTION	QTY
		1 2 3 4	
1	101935301	Clamp, Brake Cable	2
2	102025401	Tie Wrap, Heavy Duty	3
3	320	Screw, 3/8-16 X 1.00 Hex-Head Cap	1
4	8754	Locknut, 3/8-16 Hex	1

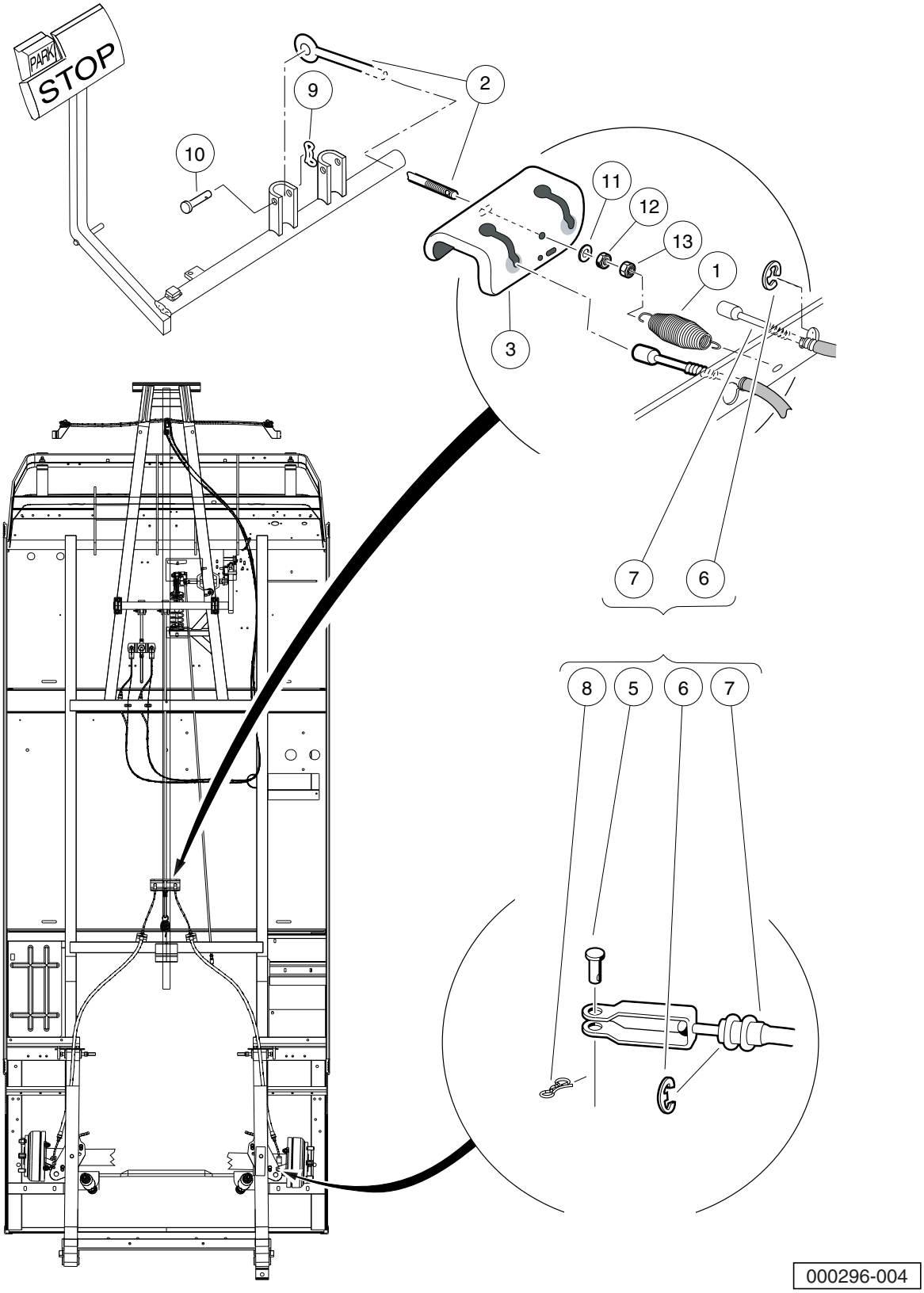
PARK
STOP
9
2
10
11
12
13
1
3
7
6
8
5
6
7
000296-004

REAR BRAKE CABLES AND EQUALIZER – VILLAGER 6 VEHICLES

ITEM	PART NO.	DESCRIPTION	QTY
		1 2 3 4	
1	1013531	Spring, Brake Return	1
2	101953103	Rod, Equalizer	1
3	101990801	Equalizer Bracket	1
4	102166901	Kit, Brake Cable Rear (includes items 5 through 8)	1
5	1010829	Pin, Clevis, 5/16 X 3/4	2
6	1011779	E-Clip, 1/2	4
7	N/A	Cable, Brake	2
8	102292801	Pin, Bow Tie Locking - .072	2
9	102323101	Pin, Bow Tie Locking	1
10	102323201	Pin, 3/8 X 1-5/16 Clevis	1
11	1241	Washer, 5/16 Type A Flat	1
12	1242	Nut, 5/16-18 Hex	1
13	7473	Locknut, 5/16-18 Nylon Insert	1

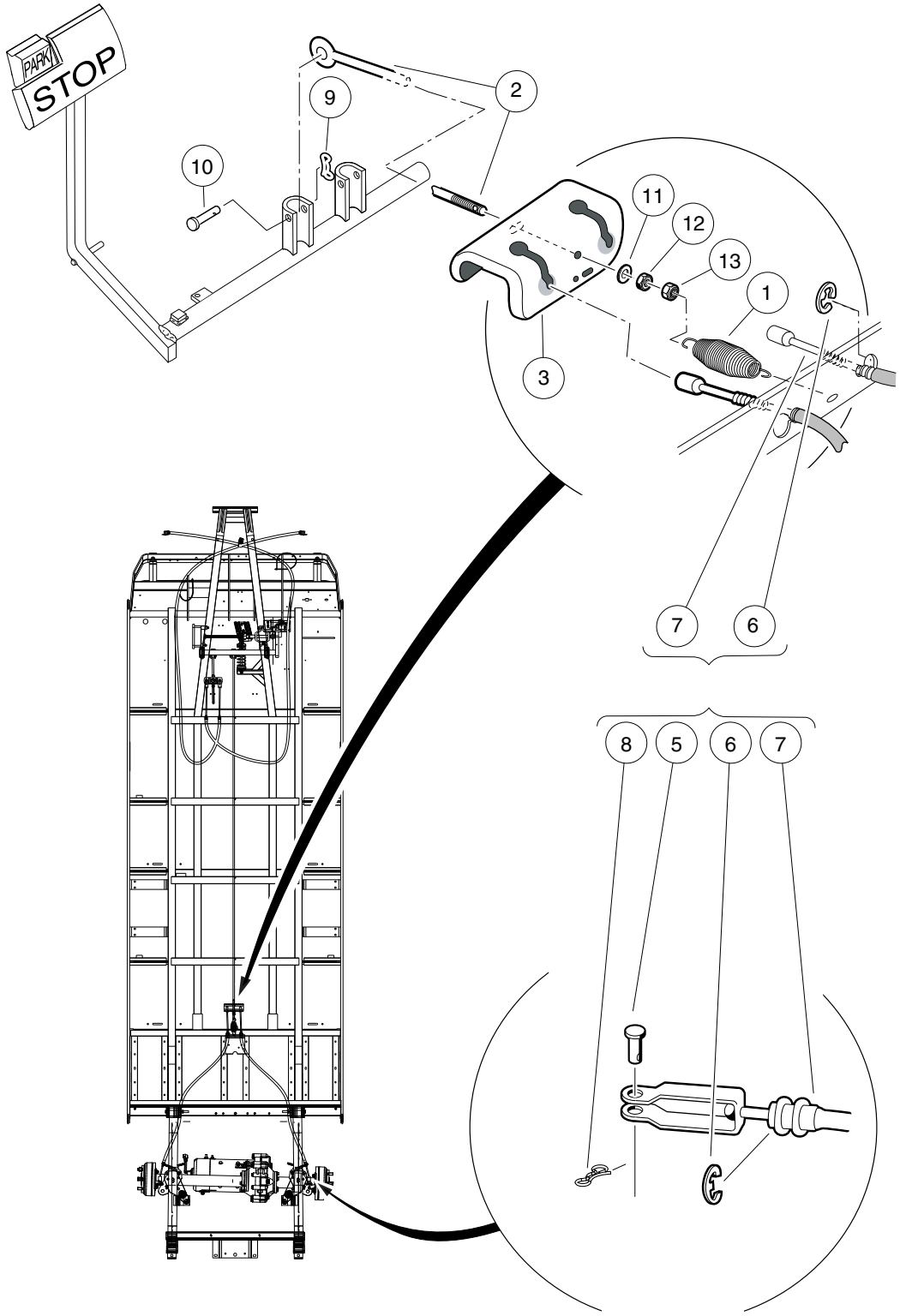

000296-003

REAR BRAKE CABLES AND EQUALIZER – VILLAGER 8 VEHICLES

ITEM	PART NO.	DESCRIPTION	QTY
		1 2 3 4	
1	1013531	Spring, Brake Return	1
2	101953104	Rod, Equalizer	1
3	101990801	Equalizer Bracket	1
4	102166901	Kit, Brake Cable Rear (includes items 5 through 8)	1
5	1010829	Pin, Clevis, 5/16 X 3/4	2
6	1011779	E-Clip, 1/2	4
7	N/A	Cable, Brake	2
8	102292801	Pin, Bow Tie Locking - .072	2
9	102323101	Pin, Bow Tie Locking	1
10	102323201	Pin, 3/8 X 1-5/16 Clevis	1
11	1241	Washer, 5/16 Type A Flat	1
12	1242	Nut, 5/16-18 Hex	1
13	7473	Locknut, 5/16-18 Nylon Insert	1

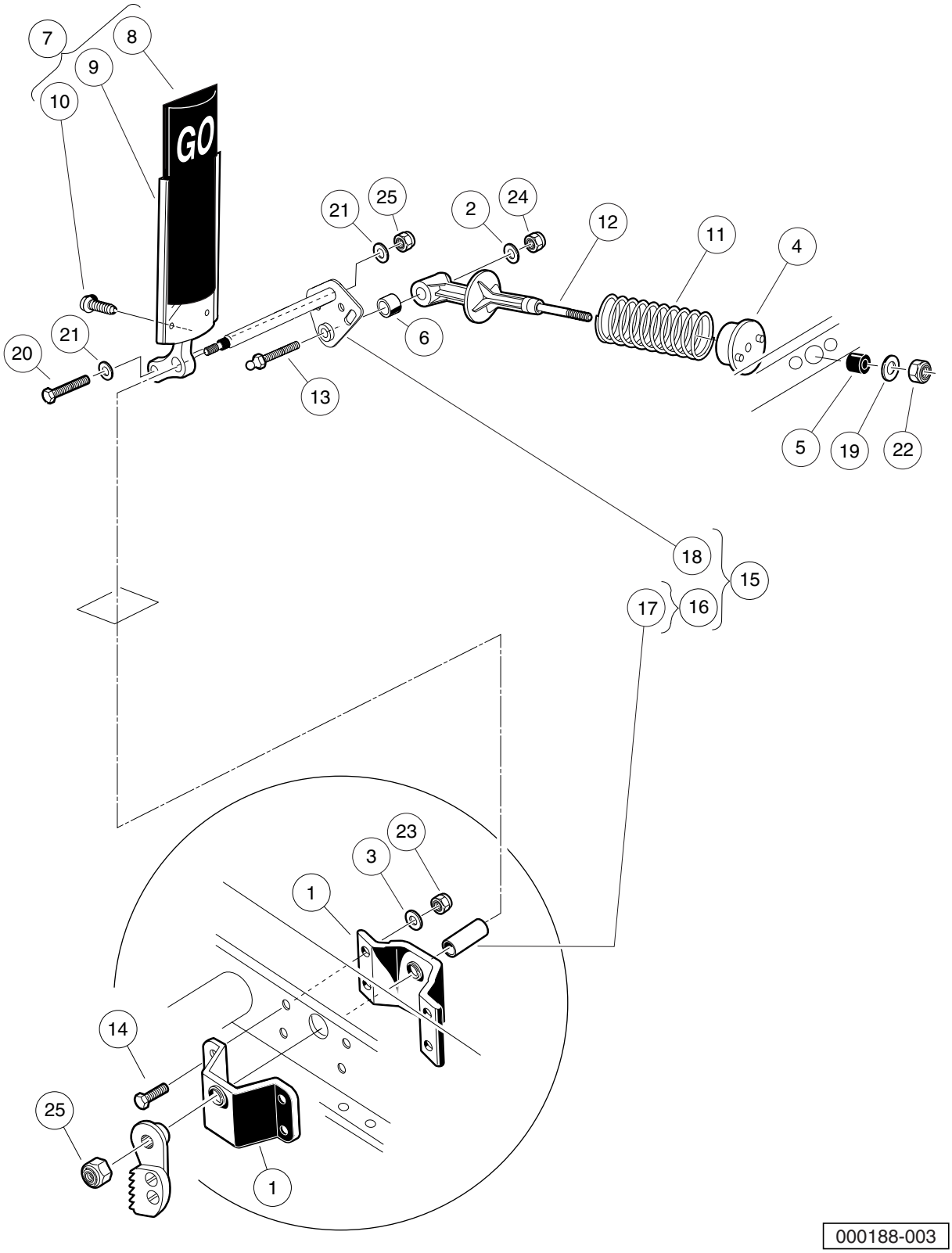
7
8
9
10
GO
21
25
2
24
12
11
4
20
21
6
13
5
19
22
18
15
17
16
23
3
1
14
25
1
000188-003

ACCELERATOR PEDAL ASSEMBLY – GASOLINE VEHICLE

ITEM	PART NO.	DESCRIPTION	QTY
		1 2 3 4	
1	1011694	Accelerator Bracket and Bearing Assembly	2
2	1011931	Washer, 1/4 Flat	1
3	1014007	Washer, 1/4 Flat	4
4	1017378	Cup, Spring	1
5	1017380	Bumper, Spring Return	1
6	1017424	Bearing, Pivot Support	1
7	1017696	Sub Asm, Accelerator Pedal (includes items 8 through 10)	1
8	1013871	Pad, Accelerator Pedal	1
9	N/A	Accelerator Pedal Weldment	1
10	7716	Screw, #10-16 Type AB, Sheet Metal	4
11	101796201	Spring, Accelerator Return	1
12	101817401	Retainer, Spring	1
13	101818801	Stud, 1/4-28 X 1.35 Ball	1
14	101861901	Screw, 1/4-20 X 1.125 Hex Cap	4
15	102026001	Kit, Accelerator Pivot Rod Assembly (includes items 16 through 18)	1
16	1011700	Spacer Assembly (includes item 17)	1
17	N/A	Spacer, Accelerator	1
18	N/A	Pivot Rod Weldment	1
19	1241	Washer, 5/16 Type A Flat	1
20	1624	Screw, 3/8-16 X 1.50 Hex-Head Cap	1
21	334	Washer, 3/8 Type A Flat	2
22	7473	Locknut, 5/16-18 Nylon Insert	1
23	8233	Locknut, 1/4-20 Nylon Insert	4
24	8717	Locknut, 1/4-28 Nylon Insert	1
25	8754	Locknut, 3/8-16 Hex	2

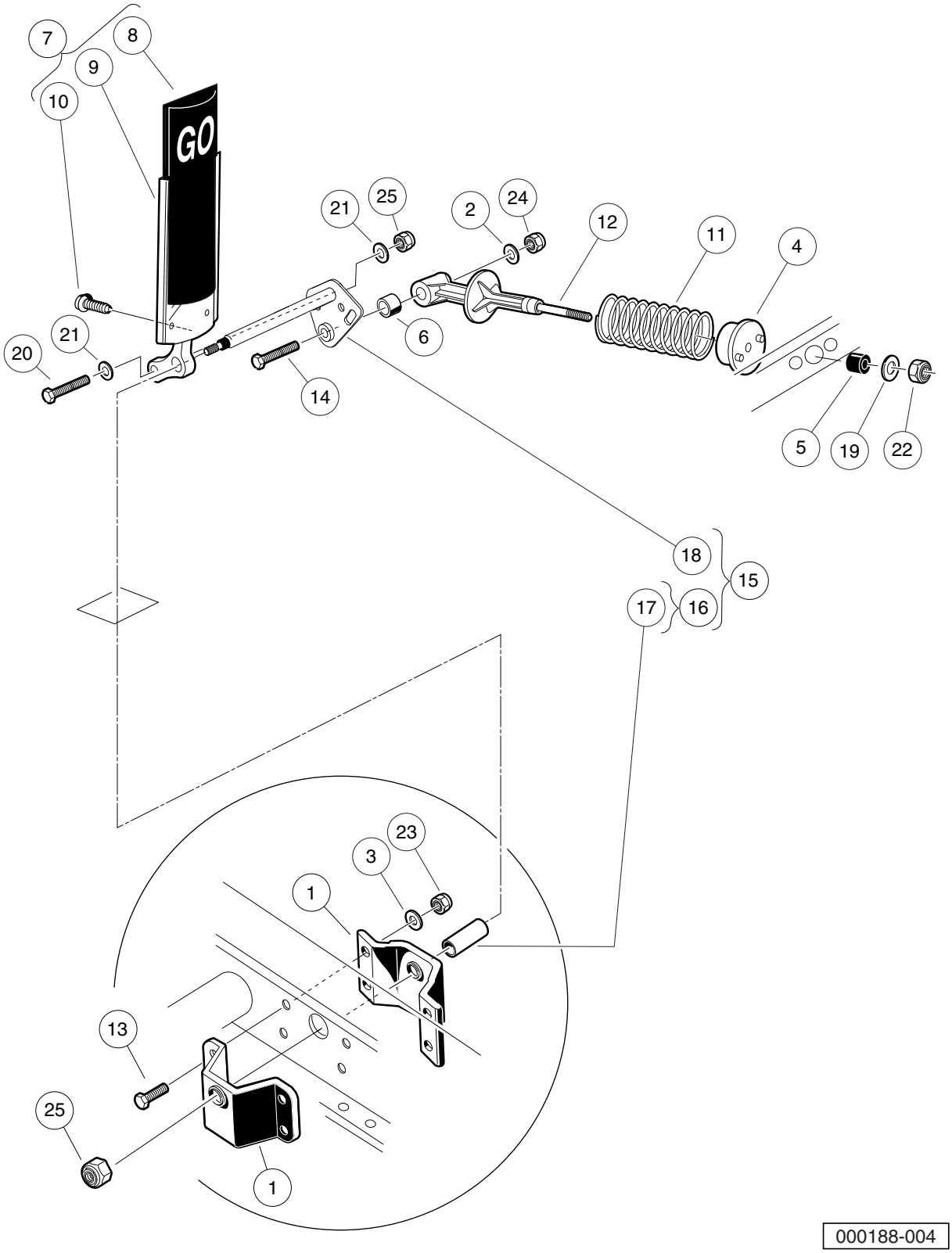
7
8
9
10
GO
21
25
2
24
12
11
4
20
21
6
14
5
19
22
18
15
17
16
23
3
1
13
25
1
000188-004

ACCELERATOR PEDAL ASSEMBLY – ELECTRIC VEHICLES WITH MCOR

ITEM	PART NO.	DESCRIPTION	QTY
		1 2 3 4	
1	1011694	Accelerator Bracket and Bearing Assembly	2
2	1011931	Washer, 1/4 Flat	1
3	1014007	Washer, 1/4 Flat	4
4	1017378	Cup, Spring	1
5	1017380	Bumper, Spring Return	1
6	1017424	Bearing, Pivot Support	1
7	1017696	Sub Asm, Accelerator Pedal (includes items 8 through 10)	1
8	1013871	Pad, Accelerator Pedal	1
9	N/A	Accelerator Pedal Weldment	1
10	7716	Screw, #10-16 Type AB, Sheet Metal	4
11	101796201	Spring, Accelerator Return	1
12	101817401	Retainer, Spring	1
13	101861901	Screw, 1/4-20 X 1.125 Hex Cap	4
14	101862001	Screw, 1/4-20 X 1.500 Flange	1
15	102026001	Kit, Accelerator Pivot Rod Assembly (includes items 16 through 18)	1
16	1011700	Spacer Assembly (includes item 17)	1
17	N/A	Spacer, Accelerator	1
18	N/A	Pivot Rod Weldment	1
19	1241	Washer, 5/16 Type A Flat	1
20	1624	Screw, 3/8-16 X 1.50 Hex-Head Cap	1
21	334	Washer, 3/8 Type A Flat	2
22	7473	Locknut, 5/16-18 Nylon Insert	1
23	8233	Locknut, 1/4-20 Nylon Insert	4
24	8717	Locknut, 1/4-28 Nylon Insert	1
25	8754	Locknut, 3/8-16 Hex	2

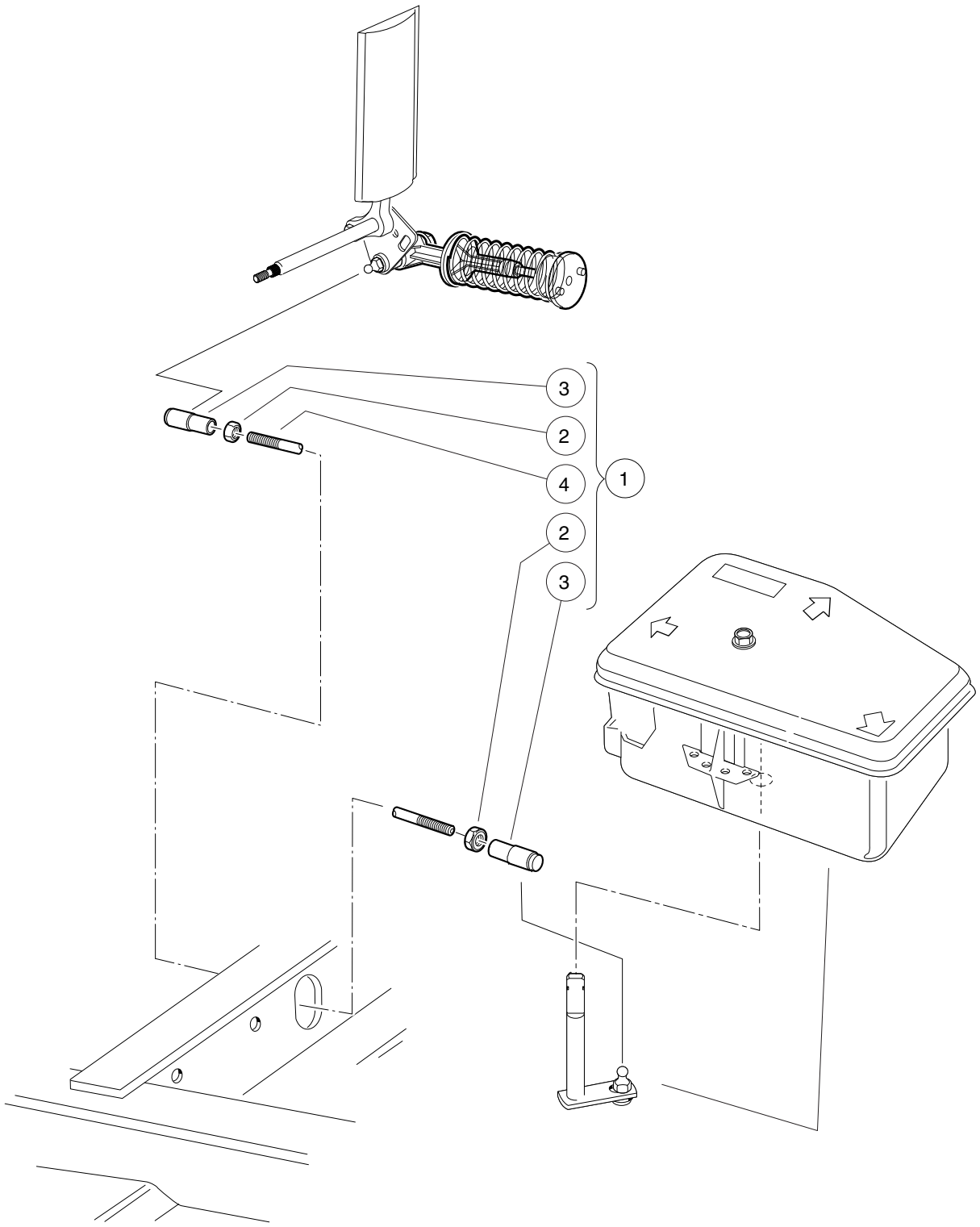

000362-001

ACCELERATOR ROD – GASOLINE VILLAGER 6

ITEM	PART NO.	DESCRIPTION	QTY
		1 2 3 4	
1	101674702	Rod, Accelerator (includes items 2 through 4)	1
2	1011084	Nut, 1/4-28 Hex Jam	2
3	1011734	Joint, Ball	2
4	N/A	Accelerator Rod Elec Stretch	1

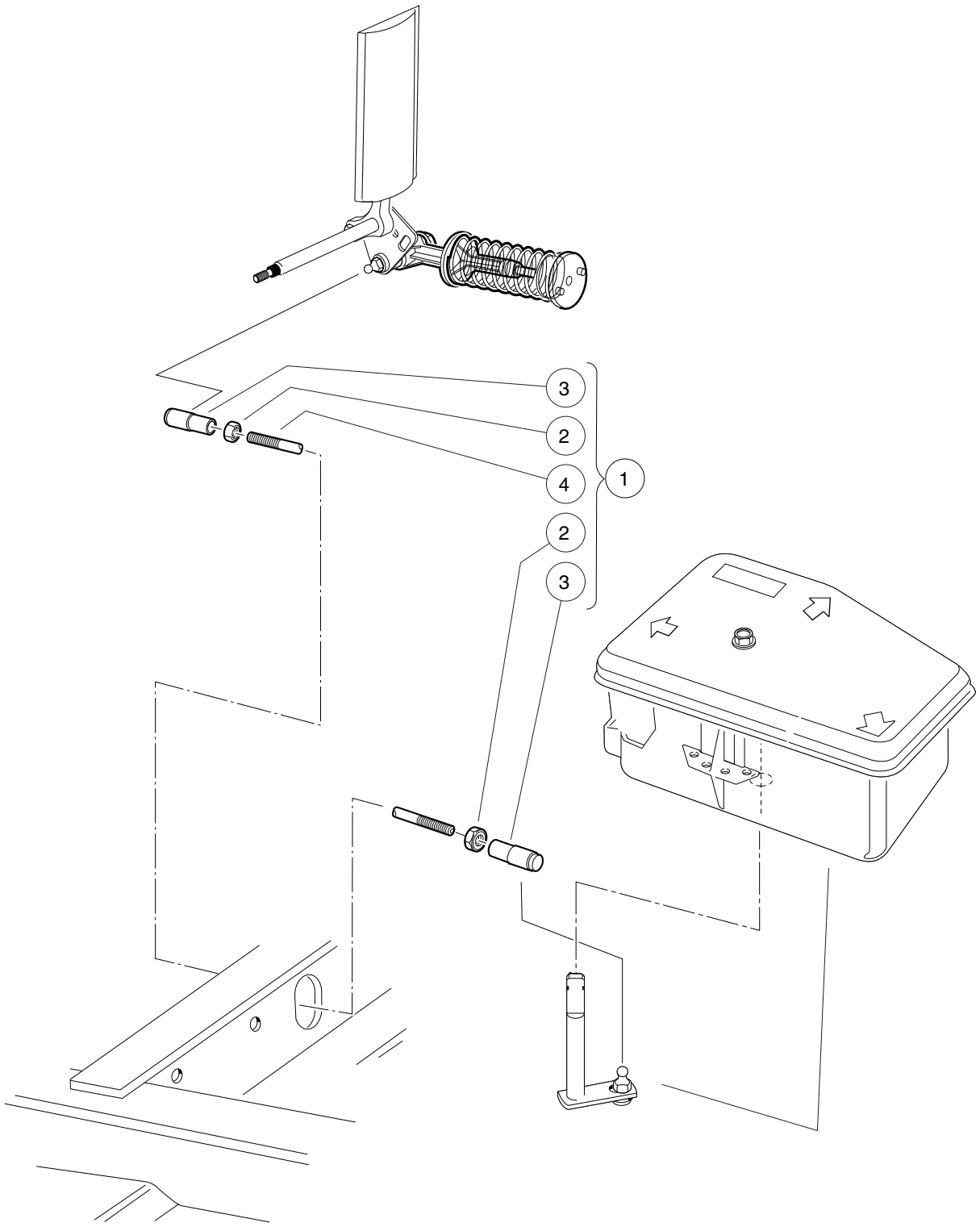

000362-001

ACCELERATOR ROD – GASOLINE VILLAGER 8

ITEM	PART NO.	DESCRIPTION	QTY
		1 2 3 4	
1	101674704	Accelerator Rod Assembly, RV XL (includes items 2 through 4)	1
2	1011084	Nut, 1/4-28 Hex Jam	2
3	1011734	Joint, Ball	2
4	N/A	Accelerator Rod, RV XL	1

4

G

E

STEERING, FRONT AND REAR SUSPENSION

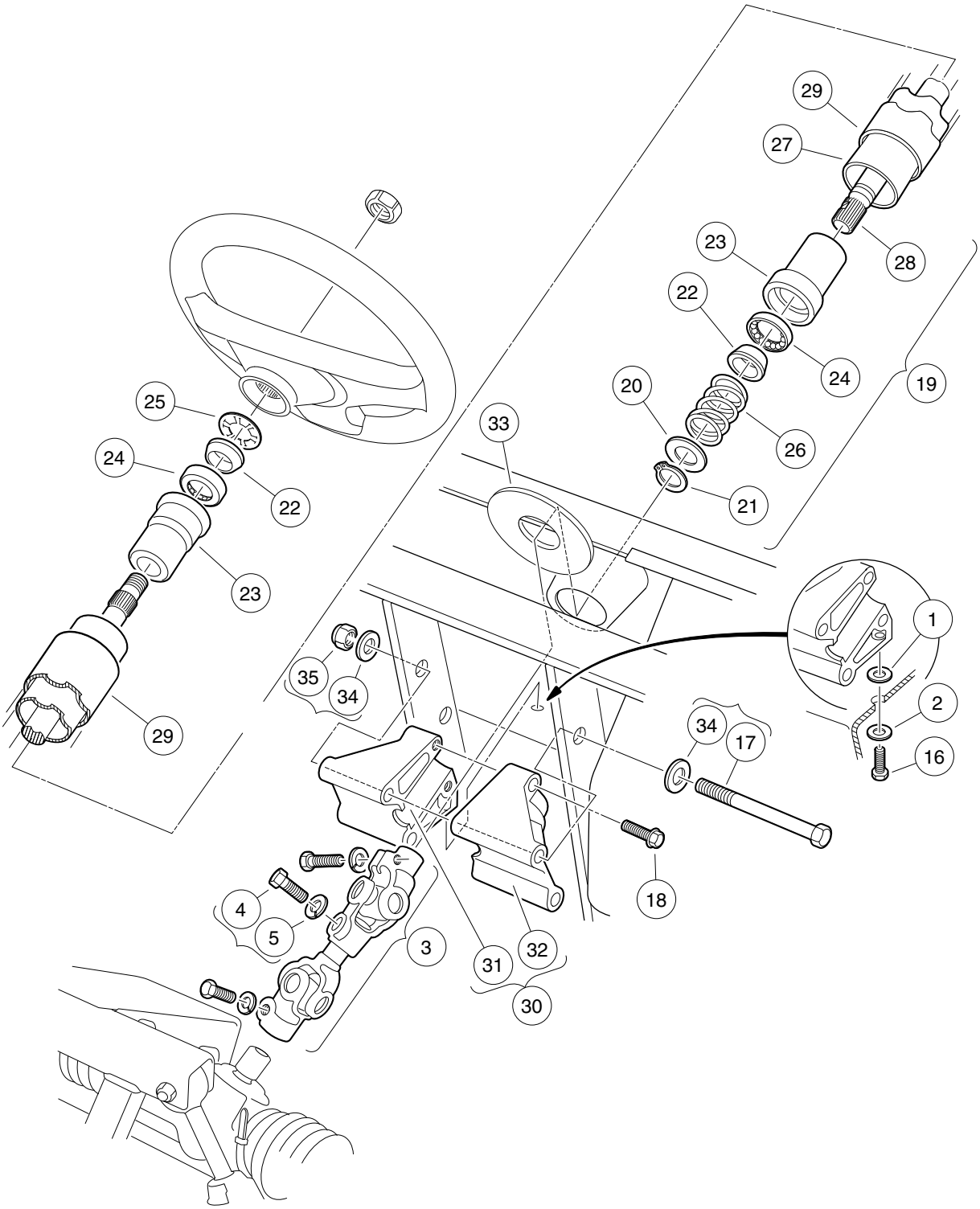
29
27
28
23
22
24
19
20
26
21
33
25
24
22
23
29
35
34
1
2
16
34
17
18
4
5
3
31
32
30

000247-001

ITEM	PART NO.	DESCRIPTION	QTY
		1 2 3 4	
1	1011578	Washer, 5/16 Type B Flat	1
2	1011697	Washer, 5/16 Flat	1
3	1013861	Intermediate Steering Shaft (includes items 4 and 5)	1
4	1017226	Bolt, Hex-Head, 8mm X 1.25 - 30	3
5	7174	Lockwasher, 5/16 Split	3
6	1014216	Steering Column Rebuild Kit (includes items 7 through 15)	A/R
7	1012466	Dust Cover	1
8	1012605	Ring, 0.579 Internal Retaining	1
9	1014125	Wedge, Molded	2
10	1014126	Seat, Plastic Bearing	2
11	1014211	Seal, Bearing	1
12	1014212	Spacer, Shaft	1
13	1014213	Bearing, Ball	2
14	1014214	Ring, Retaining	1
15	1014217	Spring, Steering Shaft	1
16	1014288	Screw, 5/16-18 X 0.75 Thread-Forming	1
17	1016183	Screw, 3/8-16 X 7.00 Hex Cap	2
18	1016269	Screw, 5/16-18 Thrd Forming	2
19	1017313	Steering Shaft Assembly (includes items 20 through 28)	1
20	1012604	Washer, 0.675 ID X 1.19 OD	1
21	1012605	Ring, 0.579 Internal Retaining	1
22	1014125	Wedge, Molded	2
23	1014126	Seat, Plastic Bearing	2
24	1014213	Bearing, Ball	2
25	1014214	Ring, Retaining	1
26	1014217	Spring, Steering Shaft	1
27	1017314	Column, Aluminum Steering	1
28	1017315	Shaft Steering Column	1
29	1017317	Tube Cover, Steering Column	1
30	101984801	Kit, Steering Column Mounting Bracket (includes items 31 and 32)	1
31	N/A	Bracket, RH Steering Column Mount	1
32	N/A	Bracket, LH Steering column mount	1
33	102278001	Boot, Steering Column Round	1
34	334	Washer, 3/8 Type A Flat	4
35	8754	Locknut, 3/8-16 Hex	2

Note: Item 6 is not illustrated.

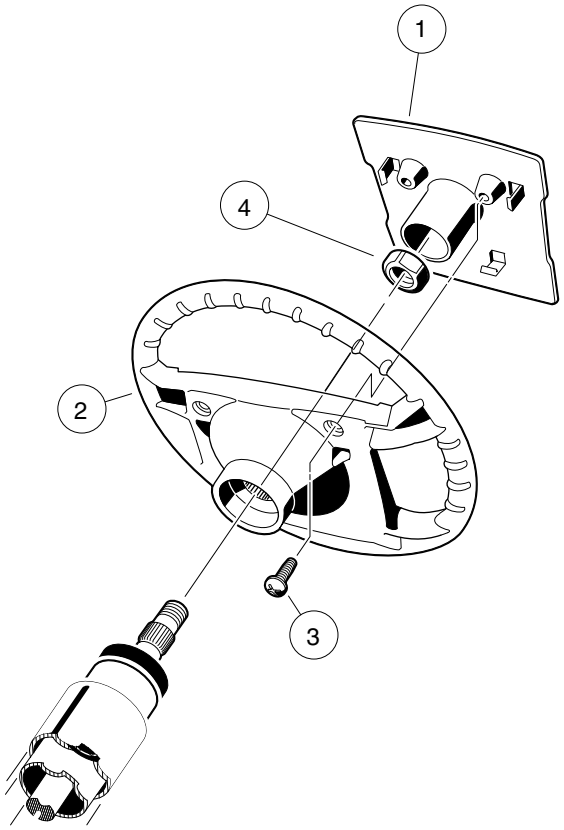

000246-003

STEERING WHEEL

ITEM	PART NO.	DESCRIPTION	QTY
		1 2 3 4	
1	101615504	Plate, Scorecard	1
2	1016156	Wheel, Steering	1
3	1016663	Screw, #12-14 X 0.625	2
4	1017273	Nut, 5/8-18 Nylon Insert Jam	1

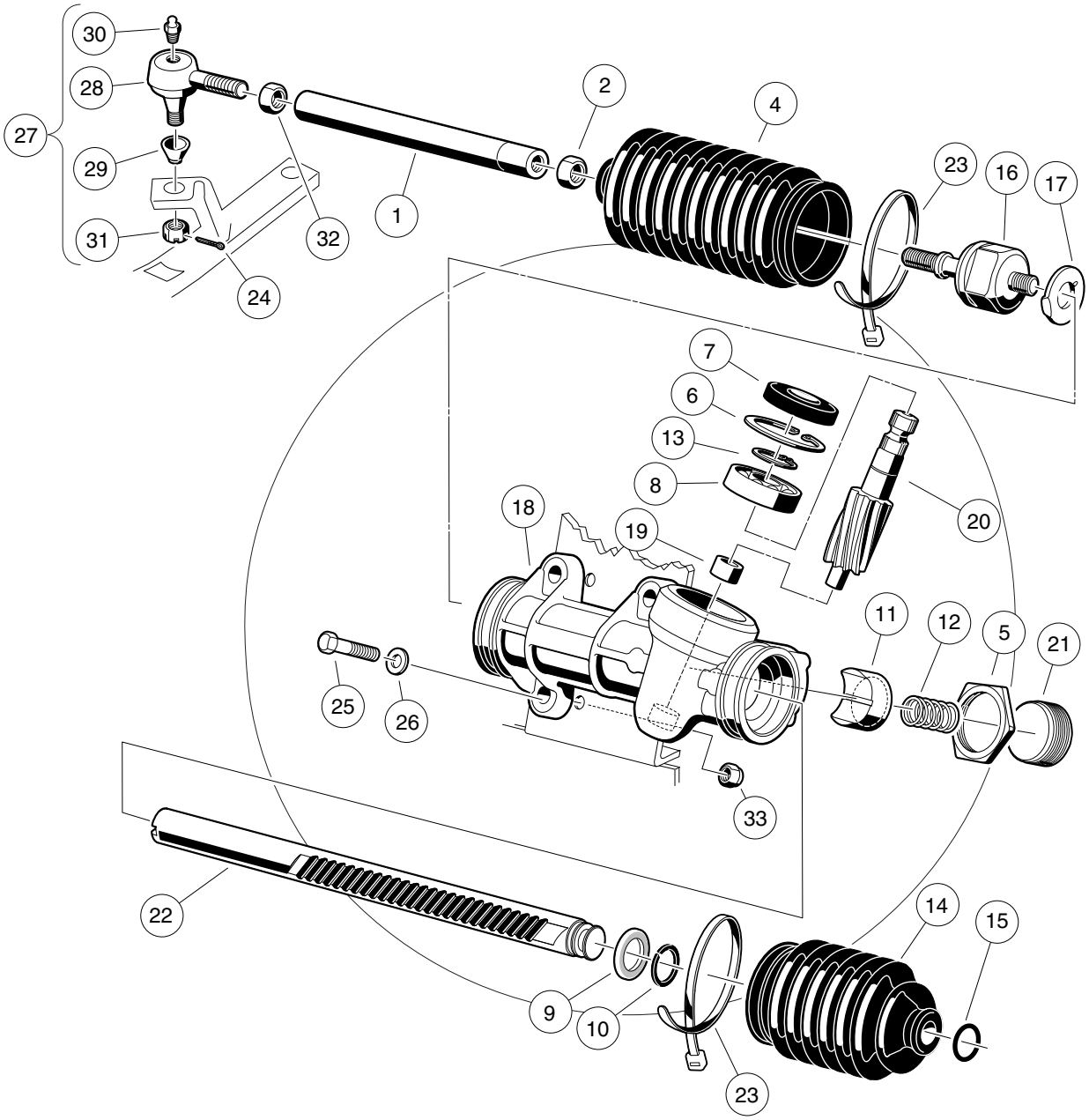
30
28
27
29
31
24
32
1
2
4
23
16
17
7
6
13
8
18
19
20
11
12
5
21
25
26
33
22
14
15
9
10
23

000189-001

STEERING GEAR ASSEMBLY

ITEM	PART NO.	DESCRIPTION	QTY
		1 2 3 4	
1	1012467	Link, Rack and Pinion Drag	1
2	1013042	Nut, 12mm Hex	1
3	101878302	Steering Gear Assembly (without yoke) (includes items 4 through 23)	1
4	1013035	Bellows, Long	1
5	1013044	Rack Screw Locknut	1
6	1013051	Snap Ring	1
7	1013052	Seal, Steering Pinion Dust	1
8	101879401	Bearing, Ball	1
9	101879501	Stop Washer	1
10	101879601	Stop Ring, C-Type	1
11	101879701	Support Yoke	1
12	101879801	Rack Guide Pressure Spring	1
13	101879901	Ring, Stop, C-Type	1
14	101880001	Bellows, Short	1
15	101880101	Dust Seal Retaining Ring	1
16	101880201	Inner Ball Joint Asm	1
17	101880301	Washer, Tab	1
18	N/A	Box, Steering Gear	1
19	N/A	Bearing, Lower Pinion	1
20	N/A	Pinion, Steering	1
21	N/A	Screw, Rack Guide	1
22	N/A	Rack, Steering	1
23	8990	Tie Wrap, 8" Nylon	2
24	1035	Cotter Pin, 3/32 x 1	1
25	1624	Screw, 3/8-16 X 1.50 Hex-Head Cap	3
26	334	Washer, 3/8 Type A Flat	3
27	7540	Ball Joint, Left (includes items 28 through 31)	1
28	N/A	Socket, LH Vertical	1
29	1011930	Seal, Vertical Socket Dust	1
30	1015597	Fitting, 1/4-28 Thread-Forming Grease	1
31	7602	Nut, 3/8-24 UNF Hex	1
32	7555	Nut, 1/2-20 Hex, Left-Hand Thread	1
33	8754	Locknut, 3/8-16 Hex	3

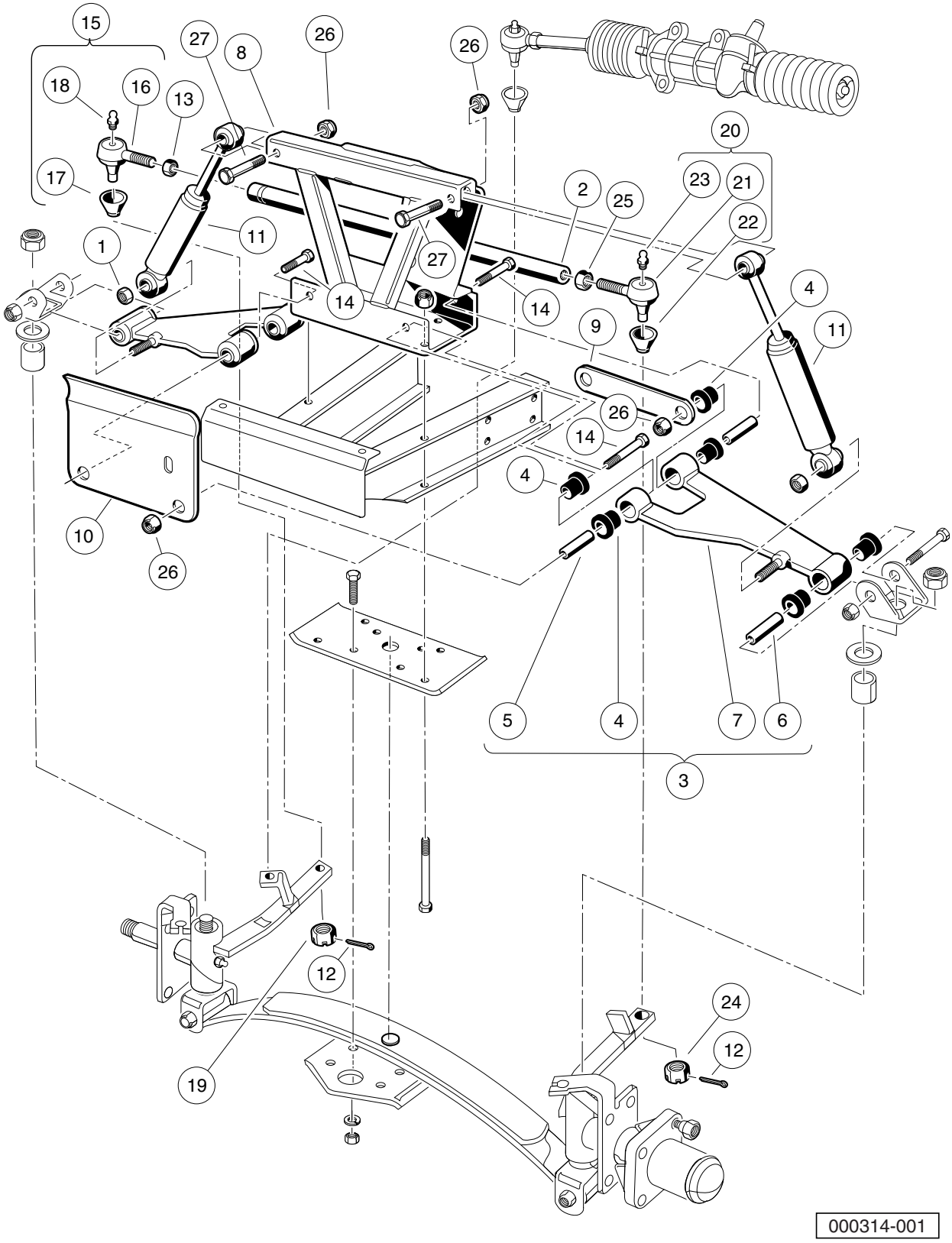
15
27
8
26
26
18
16
13
20
17
23
21
2
25
22
1
11
27
14
14
4
9
11
26
14
4
10
26
5
4
7
6
3
12
24
12
19
000314-001

ITEM	PART NO.	DESCRIPTION	QTY
		1 2 3 4	
1	1010138	Locknut, 3/8-16 Dimpled	2
2	1010219	Tie Rod	1
3	1016353	Sub-Assembly, Delta A-Plate (includes items 4 through 7)	2
4	1016346	Bushing, Urethane	6
5	1016349	Sleeve, Delta Inner	2
6	1016350	Sleeve, Delta Outer	1
7	N/A	Delta A-Plate	1
8	1016385	Delta Shock and Gear Support Assembly	1
9	1017266	A-Plate Strap	1
10	101955001	Bracket, Brake Cable Guide	1
11	103351001	Shock Absorber, Front, Common	2
12	1035	Cotter Pin, 3/32 x 1	2
13	1308	Nut, 1/2-20 Hex	1
14	2402	Screw, 3/8-16 X 2.25 Hx Hd Cap	4
15	7539	Ball Joint, Right-Hand (includes items 16 through 19)	1
16	N/A	Socket, RH Vertical	1
17	1011930	Seal, Vertical Socket Dust	1
18	1015597	Fitting, 1/4-28 Thread-Forming Grease	1
19	7602	Nut, 3/8-24 UNF Hex	1
20	7540	Ball Joint, Left (includes items 21 through 24)	1
21	N/A	Socket, LH Vertical	1
22	1011930	Seal, Vertical Socket Dust	1
23	1015597	Fitting, 1/4-28 Thread-Forming Grease	1
24	7602	Nut, 3/8-24 UNF Hex	1
25	7555	Nut, 1/2-20 Hex, Left-Hand Thread	1
26	8754	Locknut, 3/8-16 Hex	6
27	8861	Bolt, 3/8-16 X 1.75 Hex	2

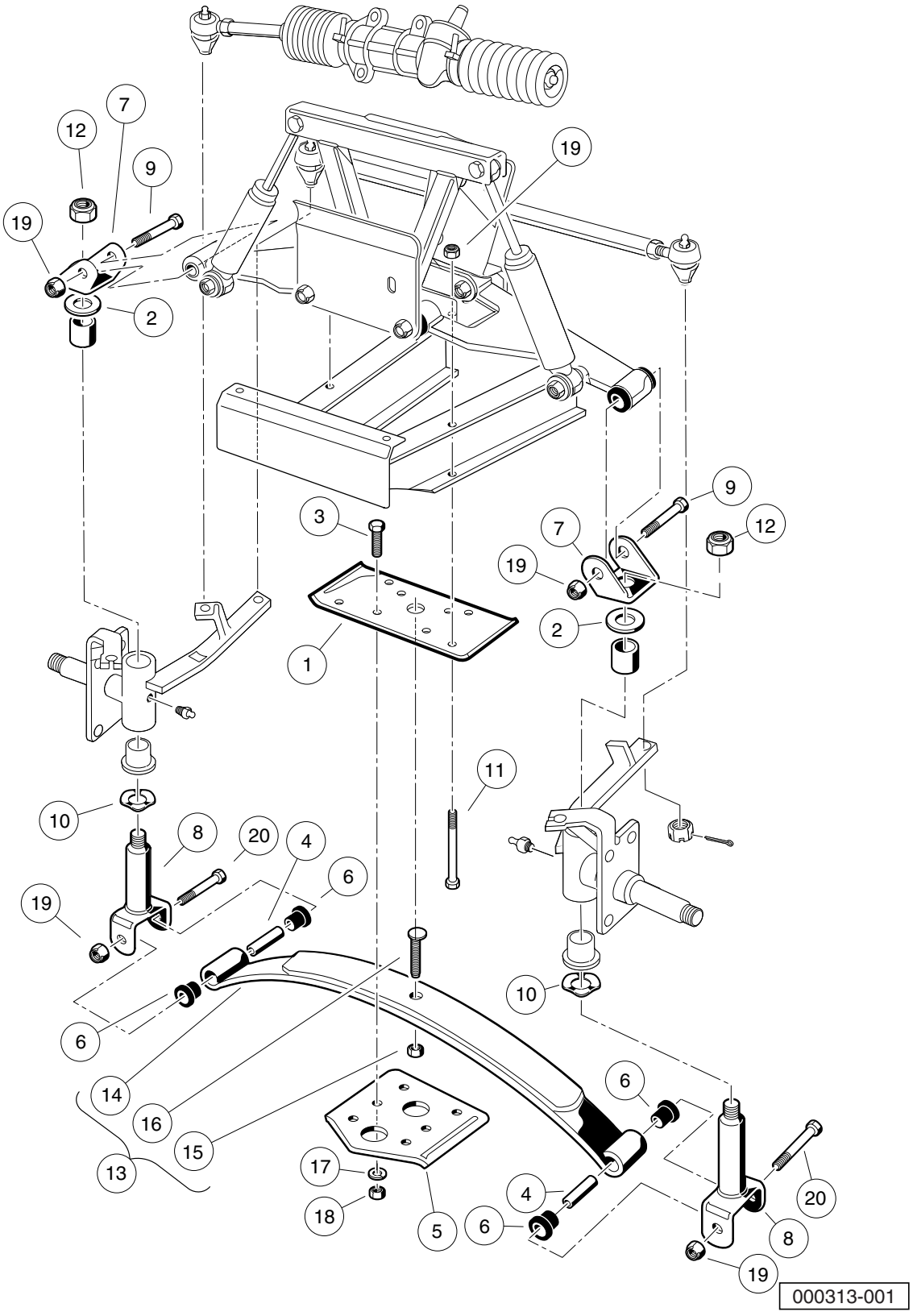
000313-001

FRONT SUSPENSION, LOWER – VILLAGER 6

ITEM	PART NO.	DESCRIPTION	QTY
		1 2 3 4	
1	1010124	Plate, Spring Mount	1
2	1010150	Bearing, Thrust	2
3	1010177	Bolt, 3/8-16 X 2.00 Hex Head	4
4	1012303	Bushing, Steel	2
5	1014276	Plate, Front Spring Retainer	1
6	1015583	Bushing, Urethane	4
7	1016384	Clevis, Delta Upper	2
8	1016386	King Pin Assembly	2
9	1016387	Screw, 3/8-16 X 2.75 Hx Hd Cap	2
10	1016389	Washer, 1.125 Od Wave	2
11	101870501	Screw, 3/8-16 X 4.75 Hx Hd Cap	4
12	101903101	Locknut, 1/2-20 Nylon Insert	2
13	102004001	Spring, Front (includes items 14 through 16)	1
14	N/A	Spring, Front Leaf	1
15	706	Nut, Hex 3/8-16	1
16	8745	Screw, Eccentric Adjustment	1
17	357	Washer, Lock, Hel Sp 3/8 Reg	4
18	706	Nut, Hex 3/8-16	4
19	8754	Locknut, 3/8-16 Hex	8
20	8755	Screw, 3/8-16 X 3.375 Hex Cap	2

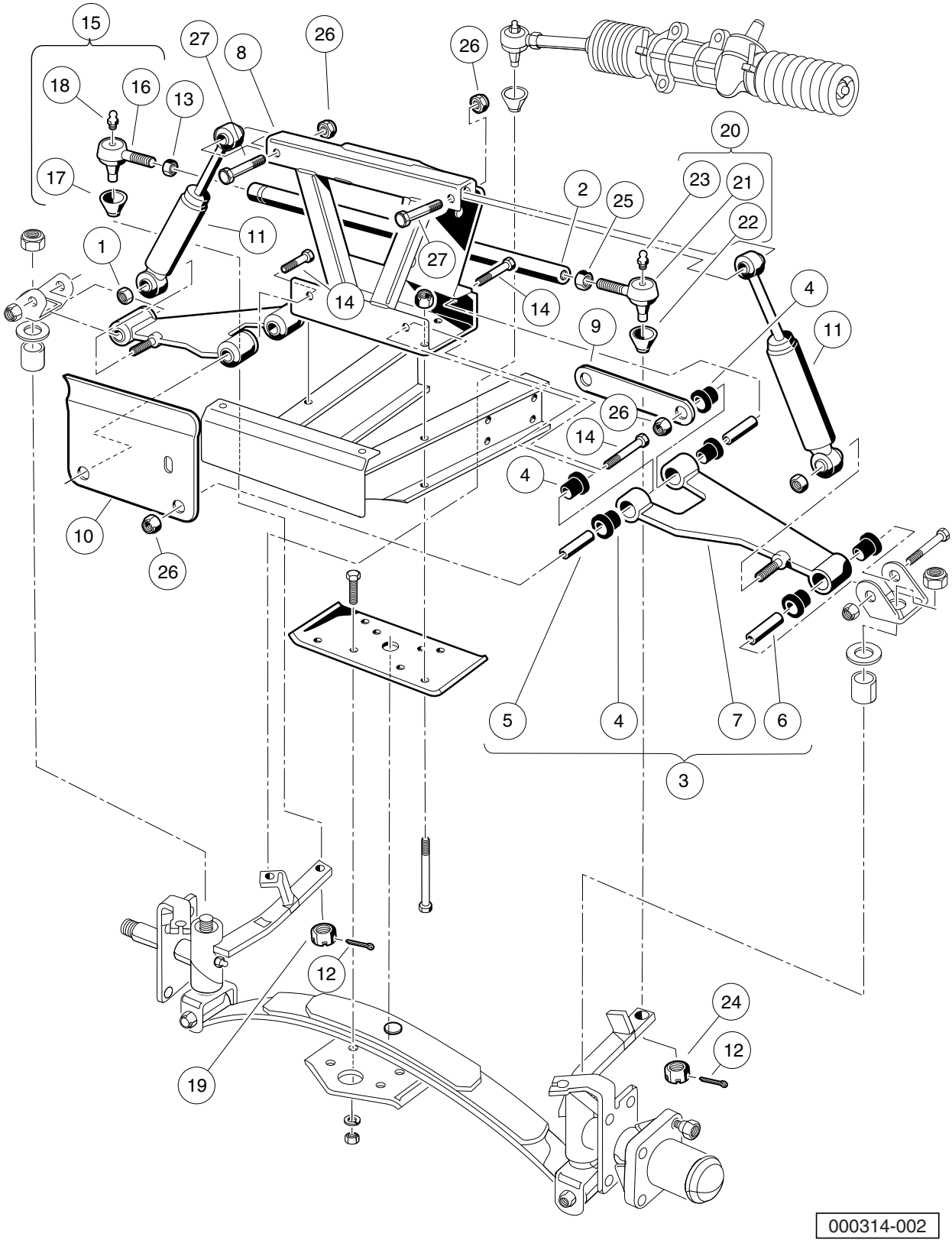
15
27
8
26
26
18
16
13
20
17
23
21
2
25
22
1
11
27
14
14
4
9
11
26
14
4
10
26
5
4
7
6
3
12
24
12
19
000314-002

FRONT SUSPENSION, UPPER – VILLAGER 8

ITEM	PART NO.	DESCRIPTION	QTY
		1 2 3 4	
1	1010138	Locknut, 3/8-16 Dimpled	2
2	1010219	Tie Rod	1
3	1016353	Sub-Assembly, Delta A-Plate (includes items 4 through 7)	2
4	1016346	Bushing, Urethane	6
5	1016349	Sleeve, Delta Inner	2
6	1016350	Sleeve, Delta Outer	1
7	N/A	Delta A-Plate	1
8	1016385	Delta Shock and Gear Support Assembly	1
9	1017266	A-Plate Strap	1
10	101955001	Bracket, Brake Cable Guide	1
11	103351001	Shock Absorber, Front, Common	2
12	1035	Cotter Pin, 3/32 x 1	2
13	1308	Nut, 1/2-20 Hex	1
14	2402	Screw, 3/8-16 X 2.25 Hx Hd Cap	4
15	7539	Ball Joint, Right-Hand (includes items 16 through 19)	1
16	N/A	Socket, RH Vertical	1
17	1011930	Seal, Vertical Socket Dust	1
18	1015597	Fitting, 1/4-28 Thread-Forming Grease	1
19	7602	Nut, 3/8-24 UNF Hex	1
20	7540	Ball Joint, Left (includes items 21 through 24)	1
21	N/A	Socket, LH Vertical	1
22	1011930	Seal, Vertical Socket Dust	1
23	1015597	Fitting, 1/4-28 Thread-Forming Grease	1
24	7602	Nut, 3/8-24 UNF Hex	1
25	7555	Nut, 1/2-20 Hex, Left-Hand Thread	1
26	8754	Locknut, 3/8-16 Hex	6
27	8861	Bolt, 3/8-16 X 1.75 Hex	2

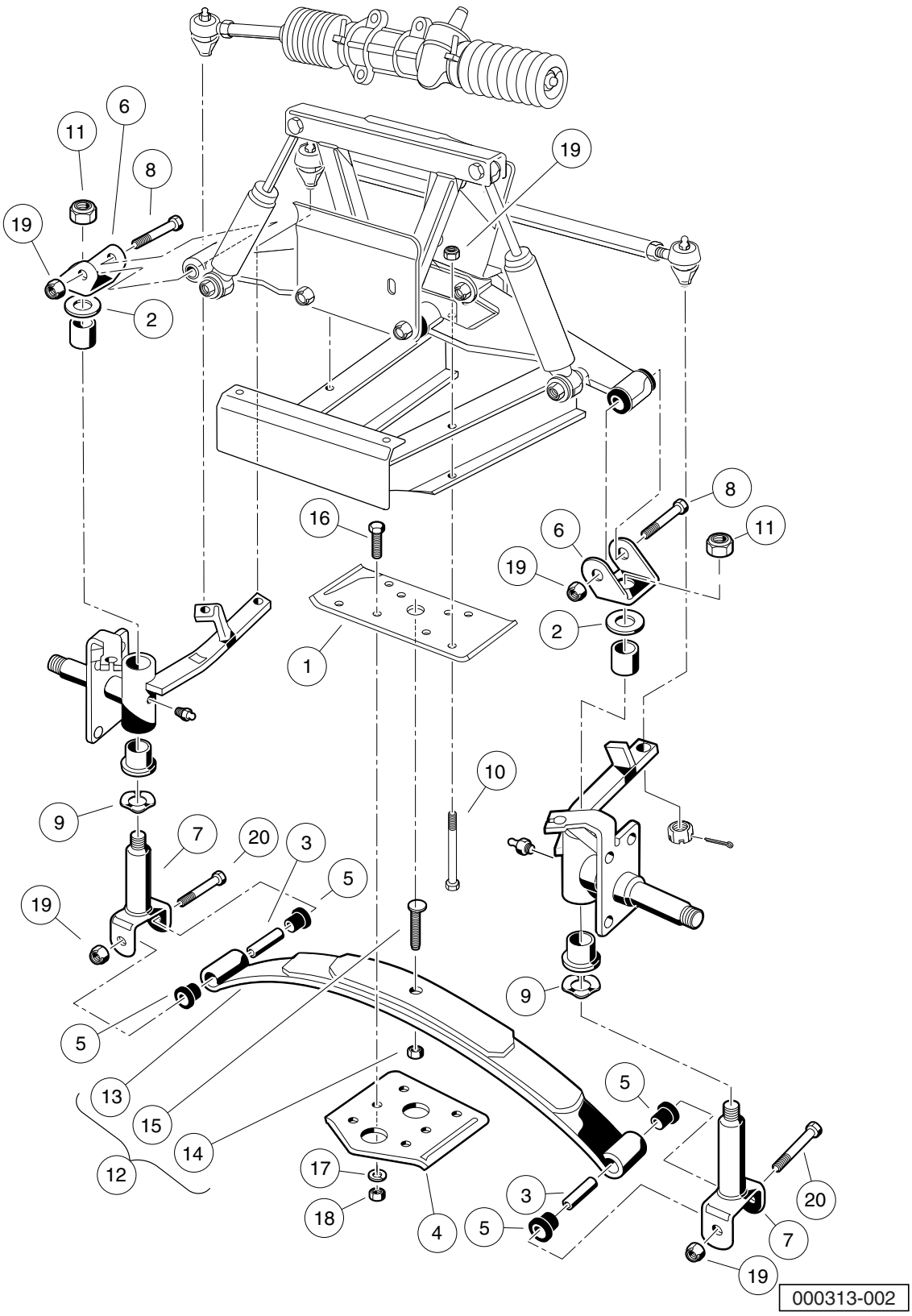
000313-002

FRONT SUSPENSION, LOWER – VILLAGER 8

ITEM	PART NO.	DESCRIPTION	QTY
		1 2 3 4	
1	1010124	Plate, Spring Mount	1
2	1010150	Bearing, Thrust	2
3	1012303	Bushing, Steel	2
4	1014276	Plate, Front Spring Retainer	1
5	1015583	Bushing, Urethane	4
6	1016384	Clevis, Delta Upper	2
7	1016386	King Pin Assembly	2
8	1016387	Screw, 3/8-16 X 2.75 Hx Hd Cap	2
9	1016389	Washer, 1.125 Od Wave	2
10	101870501	Screw, 3/8-16 X 4.75 Hx Hd Cap	4
11	101903101	Locknut, 1/2-20 Nylon Insert	2
12	102197901	Spring, Front Utility (includes items 13 through 15)	1
13	N/A	Spring, 3-Leaf	1
14	706	Nut, Hex 3/8-16	1
15	8745	Screw, Eccentric Adjustment	1
16	2402	Screw, 3/8-16 X 2.25 Hx Hd Cap	4
17	357	Washer, Lock, Hel Sp 3/8 Reg	4
18	706	Nut, Hex 3/8-16	4
19	8754	Locknut, 3/8-16 Hex	8
20	8755	Screw, 3/8-16 X 3.375 Hex Cap	2

PASSENGER SIDE

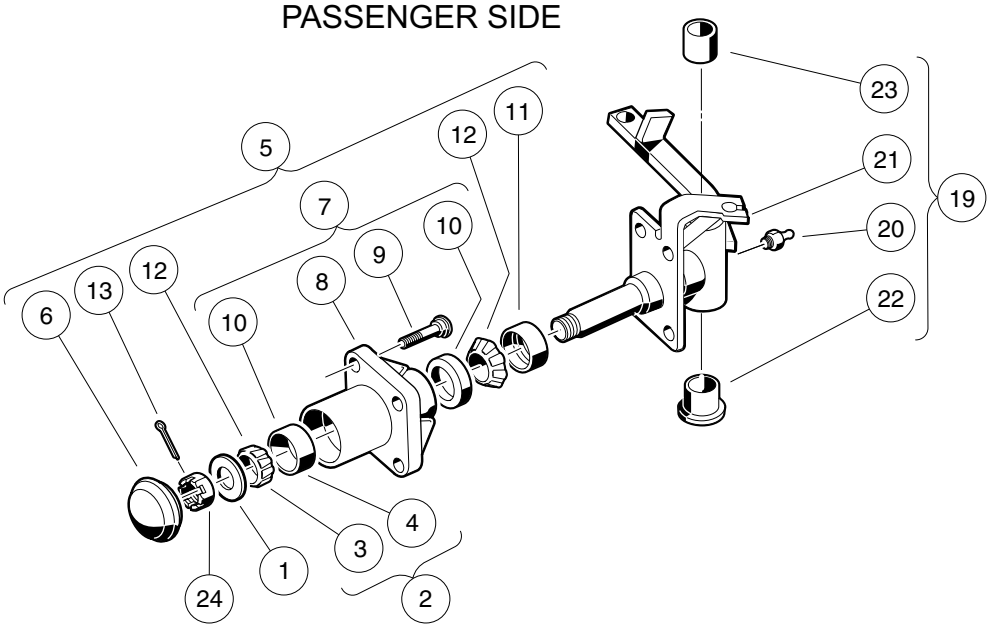

DRIVER SIDE

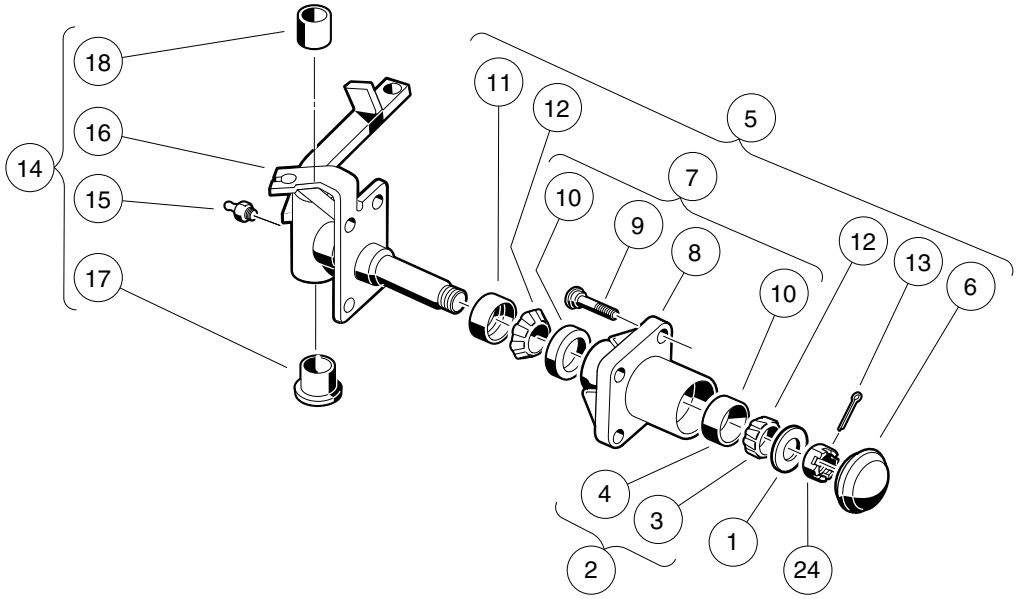

000310-002

FRONT SPINDLES AND HUBS

ITEM	PART NO.	DESCRIPTION	QTY
		1 2 3 4	
1	1010005	Washer, 3/4 Flat	2
2	1011393	Hub Bearing Package (includes items 3 and 4)	4
3	N/A	Bearing, Front Hub Wheel	1
4	N/A	Race, Front Hub Bearing	1
5	1011892	Hub Assembly (includes items 6 through 13)	2
6	1011887	Dust Cover	1
7	N/A	Hub (includes items 8 through 10)	1
8	N/A	Front Hub	1
9	N/A	50-20 Lug Stud	4
10	N/A	Race, Front Hub Bearing	2
11	1013135	Seal, Double Lip	1
12	N/A	Bearing, Front Hub Wheel	2
13	7910	Pin, 5/32 X 1.00 Cotter	1
14	101876901	Spindle Assembly Left (includes items 15 through 18)	1
15	1015597	Fitting, 1/4-28 Thread-Forming Grease	1
16	N/A	Spindle Assembly, Left	1
17	7048	Bushing, Flanged Bronze	1
18	8067	Bushing, Bronze Spindle	1
19	101877001	Spindle Assembly Right (includes items 20 through 23)	1
20	1015597	Fitting, 1/4-28 Thread-Forming Grease	1
21	N/A	Spindle Assembly, Right	1
22	7048	Bushing, Flanged Bronze	1
23	8067	Bushing, Bronze Spindle	1
24	7840	Nut, 3/4-16 Hex Slotted	2

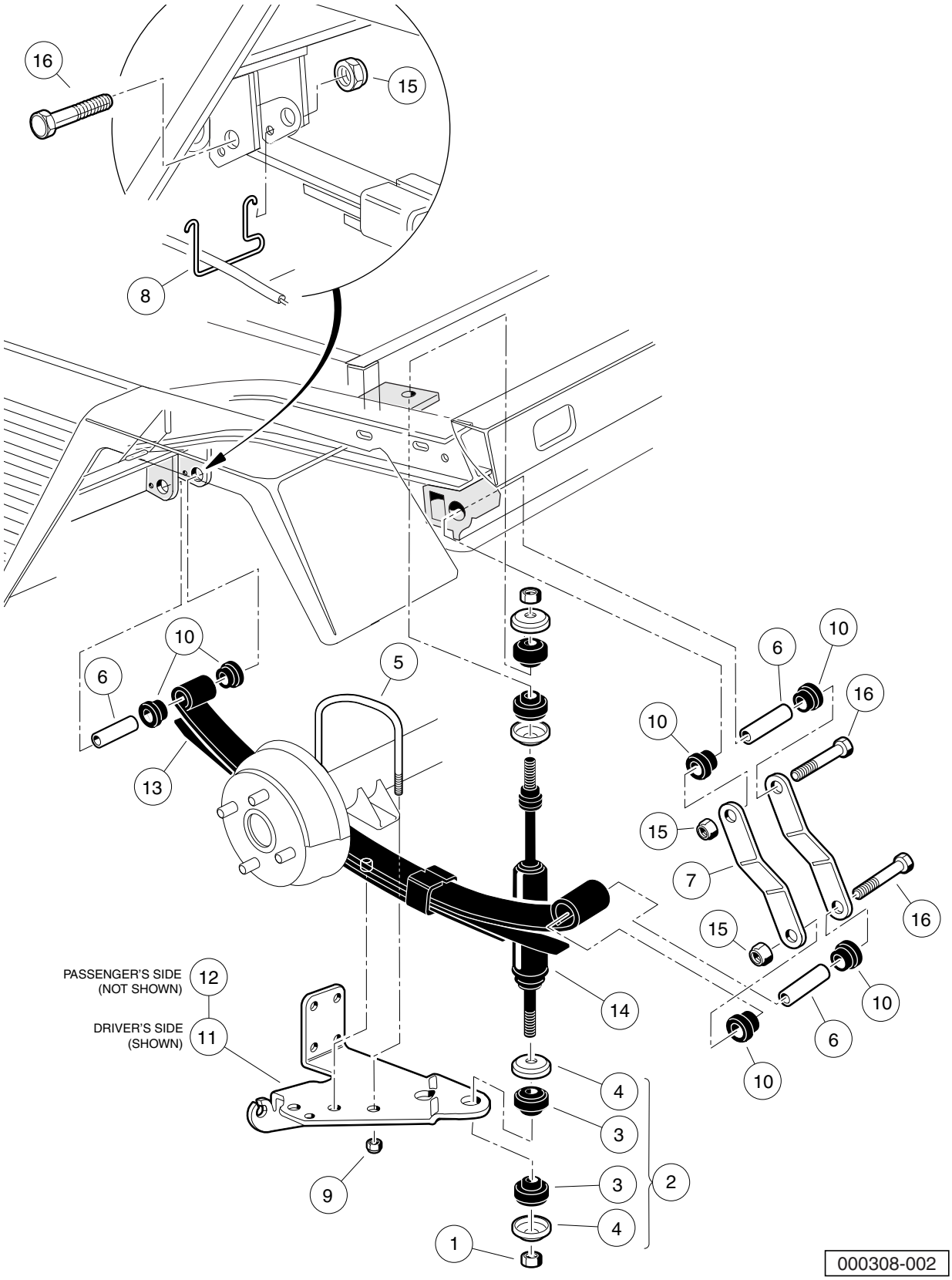
16
15
8
10
6
5
13
10
6
16
10
15
7
16
15
10
6
10
PASSENGER'S SIDE
(NOT SHOWN)
12
DRIVER'S SIDE
(SHOWN)
11
14
4
3
9
3
2
4
1
000308-002

ITEM	PART NO.	DESCRIPTION	QTY
		1 2 3 4	
1	1010145	Nut, 3/8-24 Hex	4
2	1011415	Kit, Shock Absorber Cushion (includes items 3 and 4)	4
3	N/A	Cushion, Shock Absorber	2
4	N/A	Retainer, Shock Absorber Cushion	2
5	1012180	U-Bolt	2
6	1012303	Bushing, Steel	6
7	1012304	Shackle, Rear Spring	4
8	1013207	Hanger, Brake Cable	2
9	1014555	Locknut, 7/16-14 Nylon Insert	4
10	1015583	Bushing, Urethane	12
11	101926501	Bracket, Left-Hand	1
12	101929401	Bracket, Right	1
13	102871801	Spring, Multi Leaf	2
14	103350901	Shock Absorber, Rear, Utility	2
15	8754	Locknut, 3/8-16 Hex	6
16	8755	Screw, 3/8-16 X 3.375 Hex Cap	6

Note: Only the driver-side rear suspension is shown. Parts for the passenger-side rear suspension are identical except for the leaf spring/shock mounting plate.

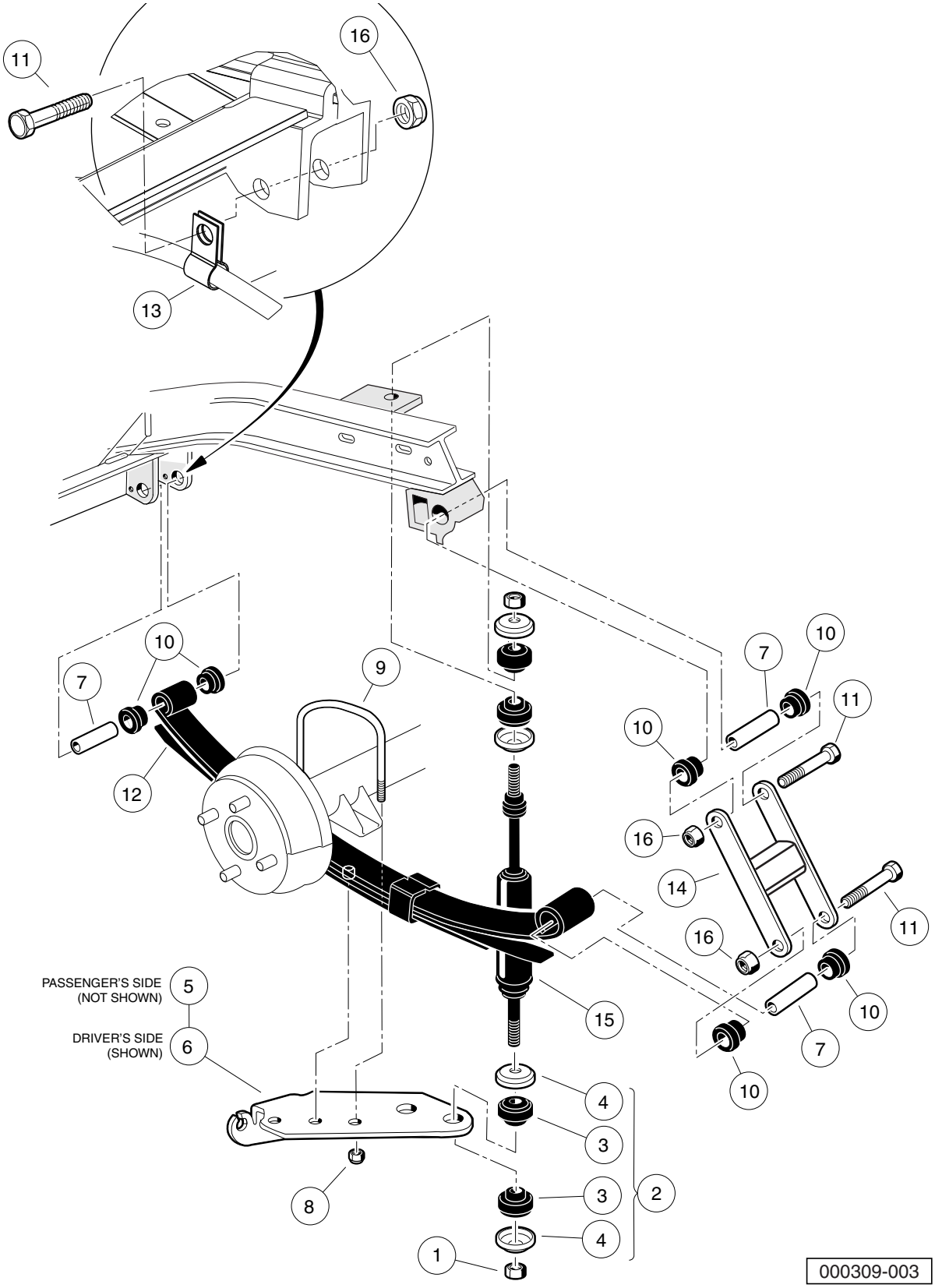
11
16
13
10
7
9
12
10
7
11
10
16
14
16
11
10
7
10
PASSENGER'S SIDE
(NOT SHOWN)
5
DRIVER'S SIDE
(SHOWN)
6
15
4
3
8
3
2
4
1
000309-003

ITEM	PART NO.	DESCRIPTION	QTY
		1 2 3 4	
1	1010145	Nut, 3/8-24 Hex	4
2	1011415	Kit, Shock Absorber Cushion (includes items 3 and 4)	4
3	N/A	Cushion, Shock Absorber	2
4	N/A	Retainer, Shock Absorber Cushion	2
5	1012181	Bracket, Shock Mounting, Right (Passenger)	1
6	1012182	Bracket, Shock Mounting, Left (Driver)	1
7	1012303	Bushing, Steel	6
8	1014555	Locknut, 7/16-14 Nylon Insert	4
9	1014902	U-Bolt	2
10	1015583	Bushing, Urethane	12
11	102066201	Screw, 3/8-16 X 3.50 Hex Cap	6
12	102871801	Spring, Multi Leaf	2
13	102891101	Clamp, Cable, Brake, Sym	2
14	102917101	Weldment, Shackle	2
15	103351101	Shock, Absorber, Utility	2
16	8754	Locknut, 3/8-16 Hex	6

Note: Only the driver-side rear suspension is shown. Parts for the passenger-side rear suspension are identical except for the leaf spring/shock mounting plate.

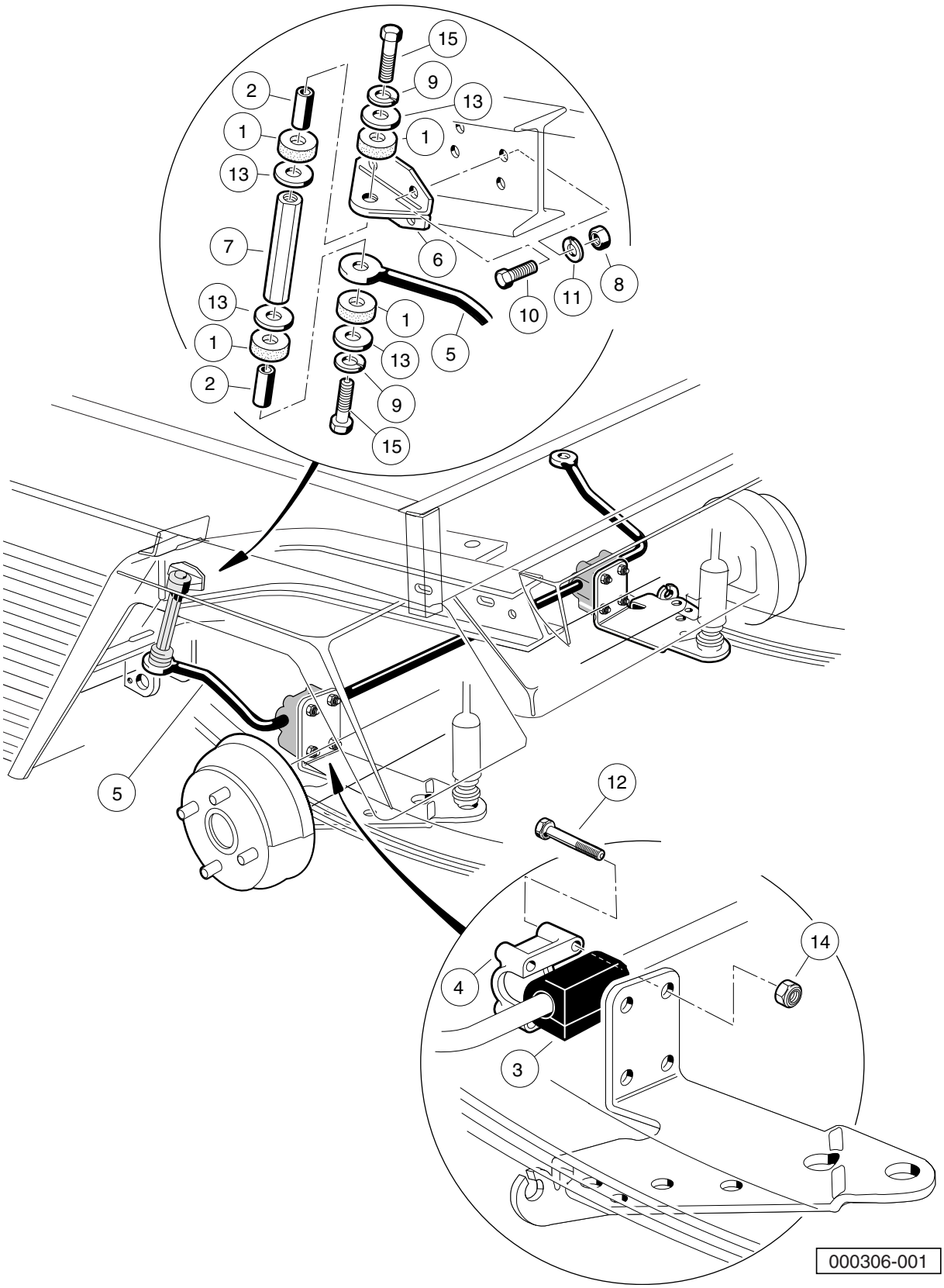
15
9
13
1
2
1
13
7
13
1
2
6
10
11
8
1
13
9
15
5
5
12
14
4
3
000306-001

STABILIZER BAR – GASOLINE VEHICLES

ITEM	PART NO.	DESCRIPTION	QTY
		1 2 3 4	
1	1015453	Compression Mount	8
2	1015457	Spacer, 0.720"	4
3	1015613	Bushing, Stabilizer Bar	2
4	1015614	Support, Bushing	2
5	1015760	Stabilizer Bar	1
6	1016813	Mounting Bracket, Stabilizer Bar	2
7	1016814	Link, Stabilizer Bar	2
8	1242	Nut, 5/16-18 Hex	8
9	357	Washer, Lock, Hel Sp 3/8 Reg	4
10	7173	Screw, 5/16-18 X 0.75 Hex-Head Cap	8
11	7174	Lockwasher, 5/16 Split	8
12	7311	Screw, 1/4-20 X 2.00 Hex-Head Cap	8
13	808	Washer, 3/8 Type B Flat	8
14	8233	Locknut, 1/4-20 Nylon Insert	8
15	8861	Bolt, 3/8-16 X 1.75 Hex	4

Note: Only the driver side of the stabilizer bar is shown. Parts for the passenger side of the stabilizer bar are identical.

5

G

E

ELECTRICAL SYSTEM – GASOLINE VEHICLES

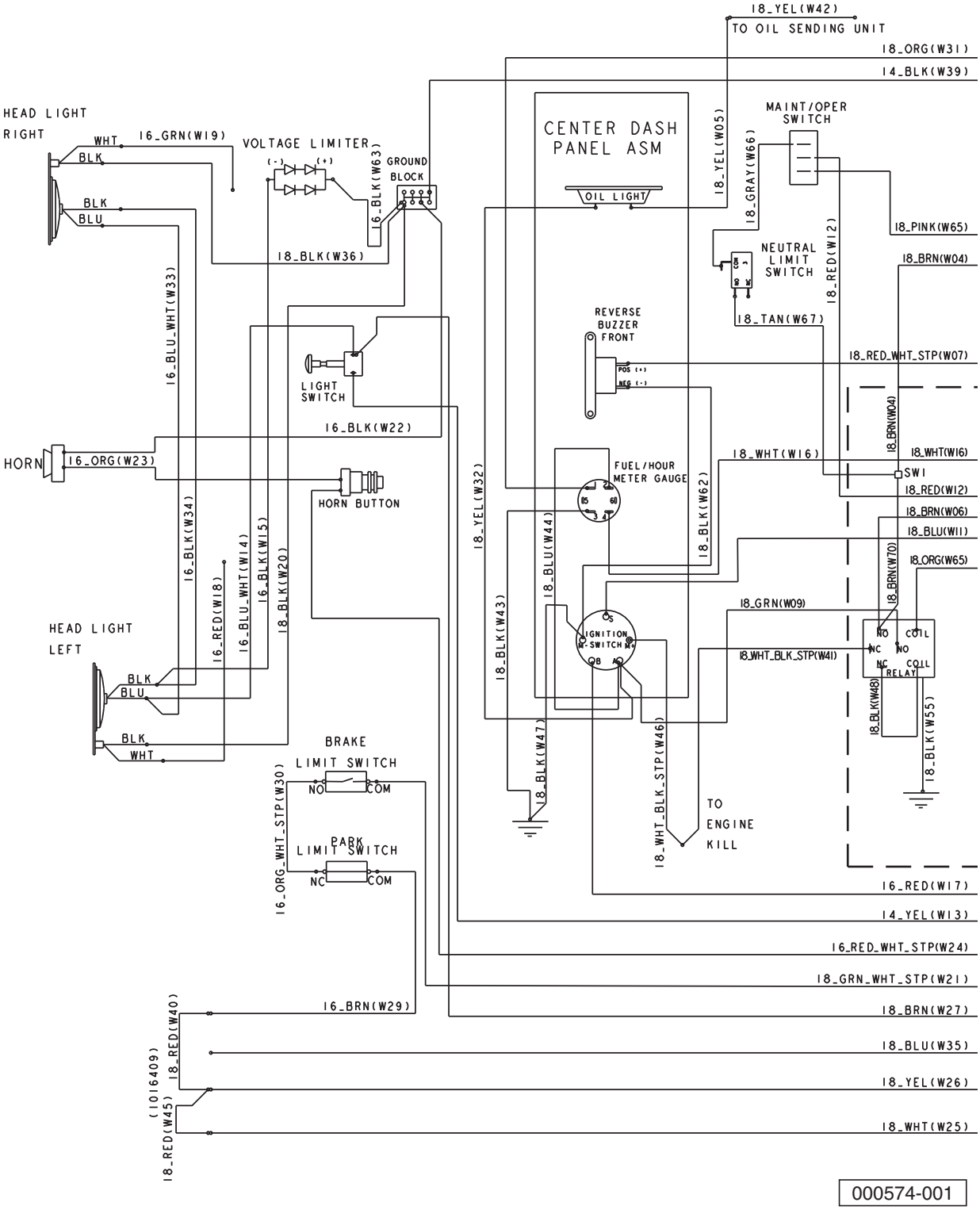
18_YEL(W42)
TO OIL SENDING UNIT
18_ORG(W31)
14_BLK(W39)
HEAD LIGHT
RIGHT
WHT
16_GRN(W19)
BLK
BLK
BLU
VOLTAGE LIMITER
(-)
(+)
GROUND
BLOCK
16_BLK(W63)
18_BLK(W36)
16_BLU_WHT(W33)
CENTER DASH
PANEL ASM
OIL LIGHT
18_YEL(W05)
MAINT/OPER
SWITCH
18_GRAY(W66)
18_PINK(W65)
NEUTRAL
LIMIT
SWITCH
18_RED(W12)
18_BRN(W04)
18_TAN(W67)
REVERSE
BUZZER
FRONT
POS (+)
NEG (-)
18_RED_WHT_STP(W07)
LIGHT
SWITCH
16_BLK(W22)
18_BRN(W04)
HORN
16_ORG(W23)
18_WHT(W16)
SW1
FUEL/HOUR
METER GAUGE
18_RED(W12)
HORN BUTTON
18_BRN(W06)
18_BLU(W11)
18_YEL(W32)
18_BLU(W44)
18_BLK(W62)
18_ORG(W65)
16_BLK(W34)
16_RED(W18)
16_BLU_WHT(W14)
16_BLK(W15)
18_BLK(W20)
18_BRN(W70)
18_GRN(W09)
HEAD LIGHT
LEFT
IGNITION
SWITCH
18_BLK(W43)
18_WHT_BLK_STP(W41)
NO
COIL
NC
NO
NC
COIL
RELAY
BLK
BLU
BLK
WHT
18_BLK(W48)
18_BLK(W55)
BRAKE
LIMIT SWITCH
NO
COM
18_BLK(W47)
TO
ENGINE
KILL
18_WHT_BLK_STP(W46)
16_ORG_WHT_STP(W30)
PARK
LIMIT SWITCH
NC
COM
16_RED(W17)
14_YEL(W13)
16_RED_WHT_STP(W24)
18_GRN_WHT_STP(W21)
16_BRN(W29)
18_BRN(W27)
18_BLU(W35)
(10)16409)
18_RED(W40)
18_YEL(W26)
18_RED(W45)
18_WHT(W25)
000574-001

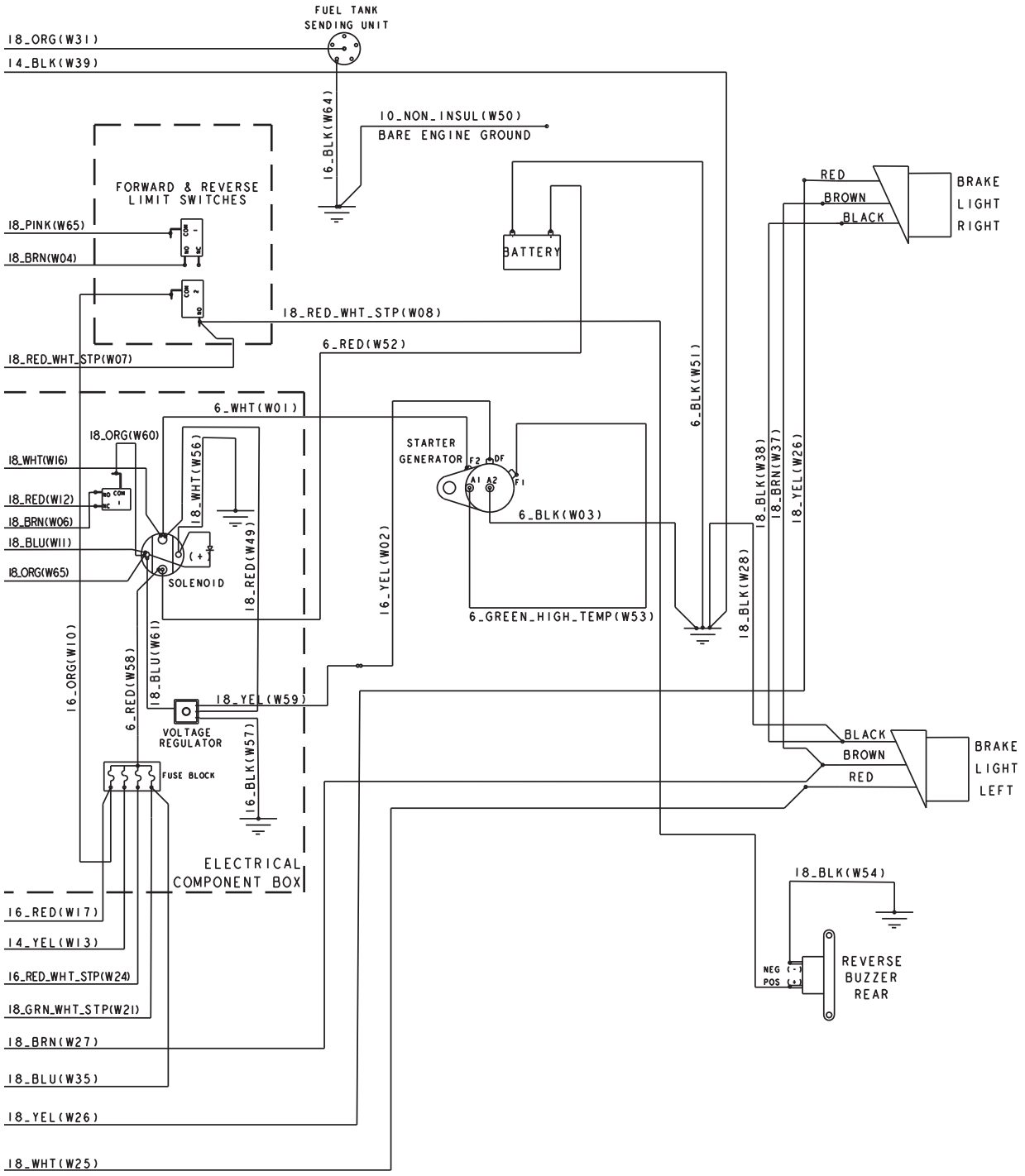
FUEL TANK
SENDING UNIT
18_ORG(W31)
14_BLK(W39)
16_BLK(W64)
10_NON_INSUL(W50)
BARE ENGINE GROUND
FORWARD & REVERSE
LIMIT SWITCHES
18_PINK(W65)
18_BRN(W04)
18_RED_WHT_STP(W08)
18_RED_WHT_STP(W07)
6_RED(W52)
BATTERY
6_BLK(W51)
RED
BROWN
BLACK
BRAKE
LIGHT
RIGHT
6_WHT(W01)
18_ORG(W60)
18_WHT(W16)
18_RED(W12)
18_BRN(W06)
18_BLU(W11)
18_ORG(W65)
18_WHT(W56)
SOLENOID
18_RED(W49)
STARTER
GENERATOR
F2
DF
A1
A2
F1
6_BLK(W03)
16_YEL(W02)
6_GREEN_HIGH_TEMP(W53)
18_BLK(W38)
18_BRN(W37)
18_YEL(W26)
18_BLK(W28)
16_ORG(W10)
6_RED(W58)
18_BLU(W61)
18_YEL(W59)
VOLTAGE
REGULATOR
FUSE BLOCK
16_BLK(W57)
BLACK
BROWN
RED
BRAKE
LIGHT
LEFT
ELECTRICAL
COMPONENT BOX
18_BLK(W54)
16_RED(W17)
14_YEL(W13)
16_RED_WHT_STP(W24)
18_GRN_WHT_STP(W21)
18_BRN(W27)
18_BLU(W35)
18_YEL(W26)
18_WHT(W25)
NEG
POS
REVERSE
BUZZER
REAR

000574-001

See previous two pages for illustration.

ITEM	PART NO.	DESCRIPTION	QTY
		1 2 3 4	
1	103197301	Asm, Wire Harness, Stretch, Gas	1
2	103255601	Wire Harness, Hd Lght, Ca, Gas	1

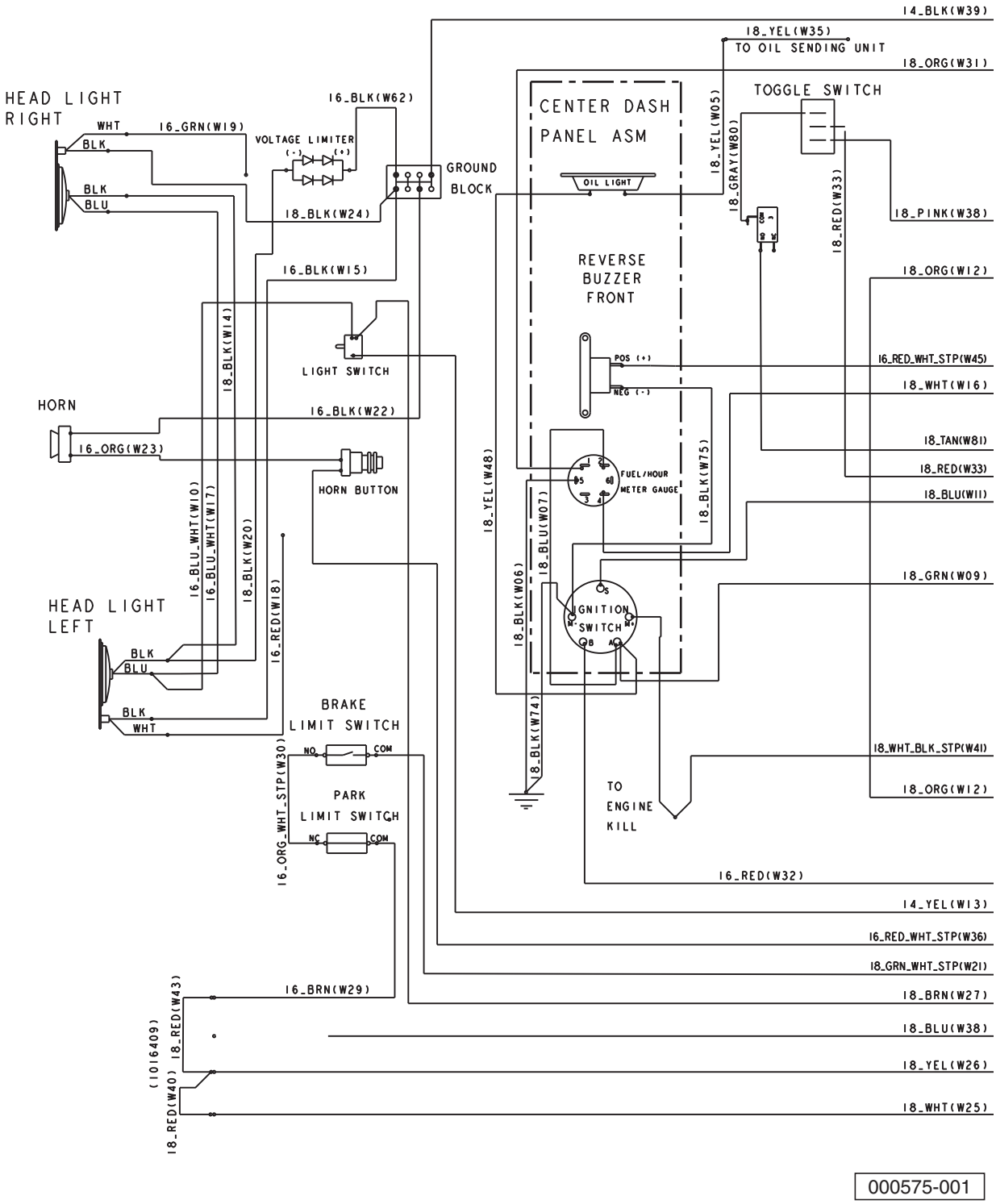
14_BLK(W39)
18_YEL(W35)
TO OIL SENDING UNIT
18_ORG(W31)
HEAD LIGHT
RIGHT
WHT
BLK
BLK
BLU
16_GRN(W19)
16_BLK(W62)
VOLTAGE LIMITER
GROUND
BLOCK
18_BLK(W24)
CENTER DASH
PANEL ASM
OIL LIGHT
TOGGLE SWITCH
18_YEL(W05)
18_GRAY(W80)
18_RED(W33)
18_PINK(W38)
16_BLK(W15)
REVERSE
BUZZER
FRONT
18_ORG(W12)
LIGHT SWITCH
POS (+)
NEG (-)
16_RED_WHT_STP(W45)
18_WHT(W16)
HORN
16_BLK(W22)
16_ORG(W23)
18_TAN(W81)
18_RED(W33)
HORN BUTTON
FUEL/HOUR
METER GAUGE
18_BLU(W11)
18_YEL(W48)
18_BLK(W75)
18_BLU(W07)
18_BLK(W06)
18_GRN(W09)
IGNITION
SWITCH
16_BLU_WHT(W10)
16_BLU_WHT(W17)
18_BLK(W20)
16_RED(W18)
HEAD LIGHT
LEFT
BLK
BLU
BLK
WHT
BRAKE
LIMIT SWITCH
NO
COM
18_WHT_BLK_STP(W41)
18_BLK(W74)
TO
ENGINE
KILL
18_ORG(W12)
PARK
LIMIT SWITCH
NC
COM
16_ORG_WHT_STP(W30)
16_RED(W32)
14_YEL(W13)
16_RED_WHT_STP(W36)
18_GRN_WHT_STP(W21)
16_BRN(W29)
18_BRN(W27)
18_BLU(W38)
(1016409)
18_RED(W43)
18_YEL(W26)
18_RED(W40)
18_WHT(W25)
000575-001

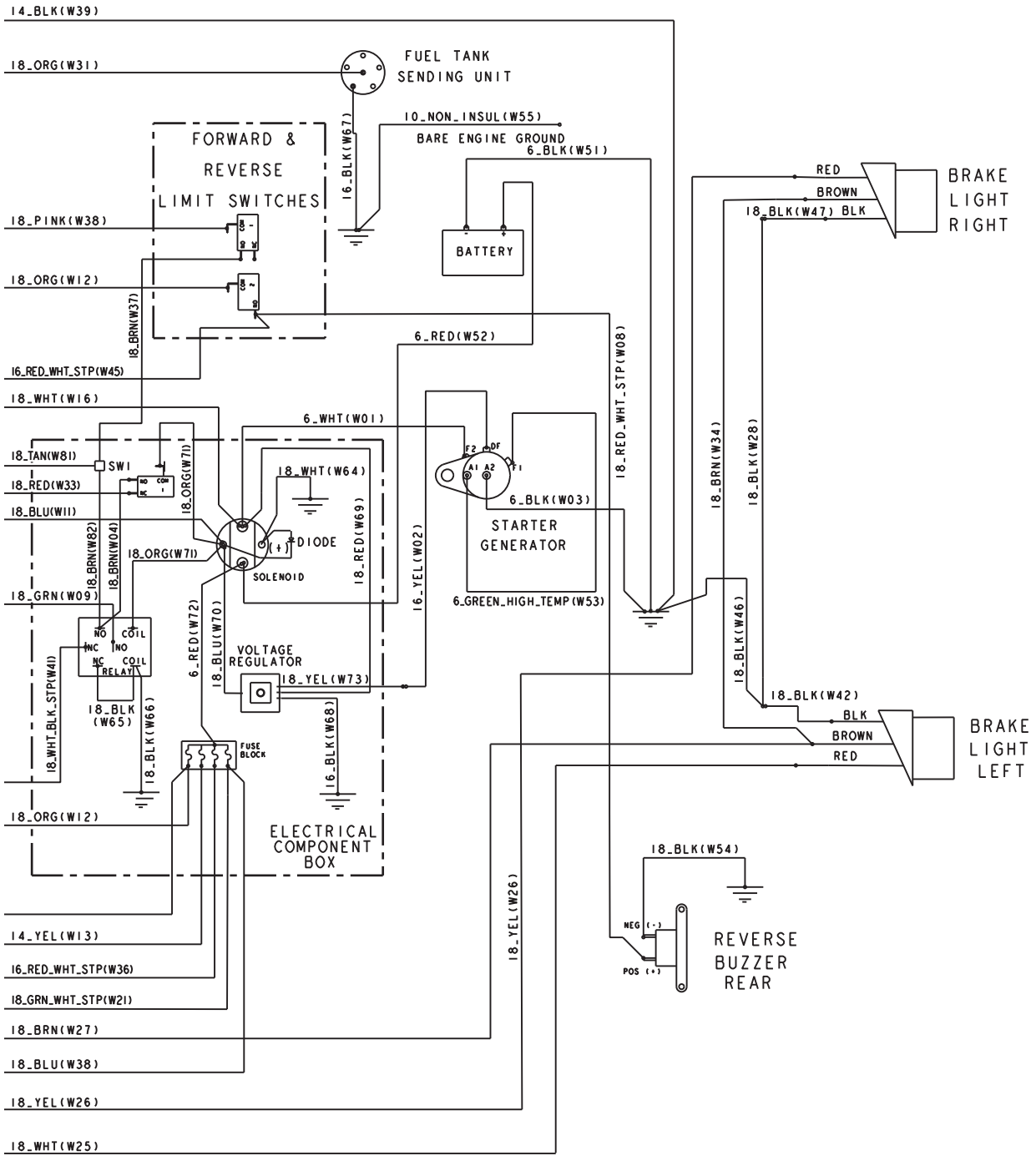
14_BLK(W39)
18_ORG(W31)
FUEL TANK
SENDING UNIT
10_NON_INSUL(W55)
BARE ENGINE GROUND
16_BLK(W67)
6_BLK(W51)
FORWARD &
REVERSE
LIMIT SWITCHES
18_PINK(W38)
18_ORG(W12)
18_BRN(W37)
BATTERY
6_RED(W52)
16_RED_WHT_STP(W45)
18_WHT(W16)
6_WHT(W01)
18_RED_WHT_STP(W08)
RED
BROWN
18_BLK(W47) BLK
BRAKE
LIGHT
RIGHT
18_TAN(W81)
SW1
18_RED(W33)
18_BLU(W11)
18_ORG(W71)
18_WHT(W64)
18_BRN(W82)
18_BRN(W04)
DIODE
SOLENOID
18_RED(W69)
16_YEL(W02)
F2
DF
A1
A2
F1
6_BLK(W03)
STARTER
GENERATOR
6_GREEN_HIGH_TEMP(W53)
18_BRN(W34)
18_BLK(W28)
18_GRN(W09)
NO
COIL
NC
NO
NC
COIL
RELAY
6_RED(W72)
18_BLU(W70)
VOLTAGE
REGULATOR
18_YEL(W73)
18_BLK(W46)
18_BLK(W42)
BLK
BROWN
RED
BRAKE
LIGHT
LEFT
18_WHT_BLK_STP(W41)
18_BLK
(W65)
18_BLK(W66)
FUSE
BLOCK
16_BLK(W68)
18_ORG(W12)
ELECTRICAL
COMPONENT
BOX
18_BLK(W54)
NEG (-)
POS (+)
REVERSE
BUZZER
REAR
18_YEL(W26)
14_YEL(W13)
16_RED_WHT_STP(W36)
18_GRN_WHT_STP(W21)
18_BRN(W27)
18_BLU(W38)
18_YEL(W26)
18_WHT(W25)

000575-001

See previous two pages for illustration.

ITEM	PART NO.	DESCRIPTION	QTY
		1 2 3 4	
1	103197401	Asm, Wire Harness, Villager 8, Gas	1
2	103254401	Wire Harness, Lght Pkg, V8, El	1

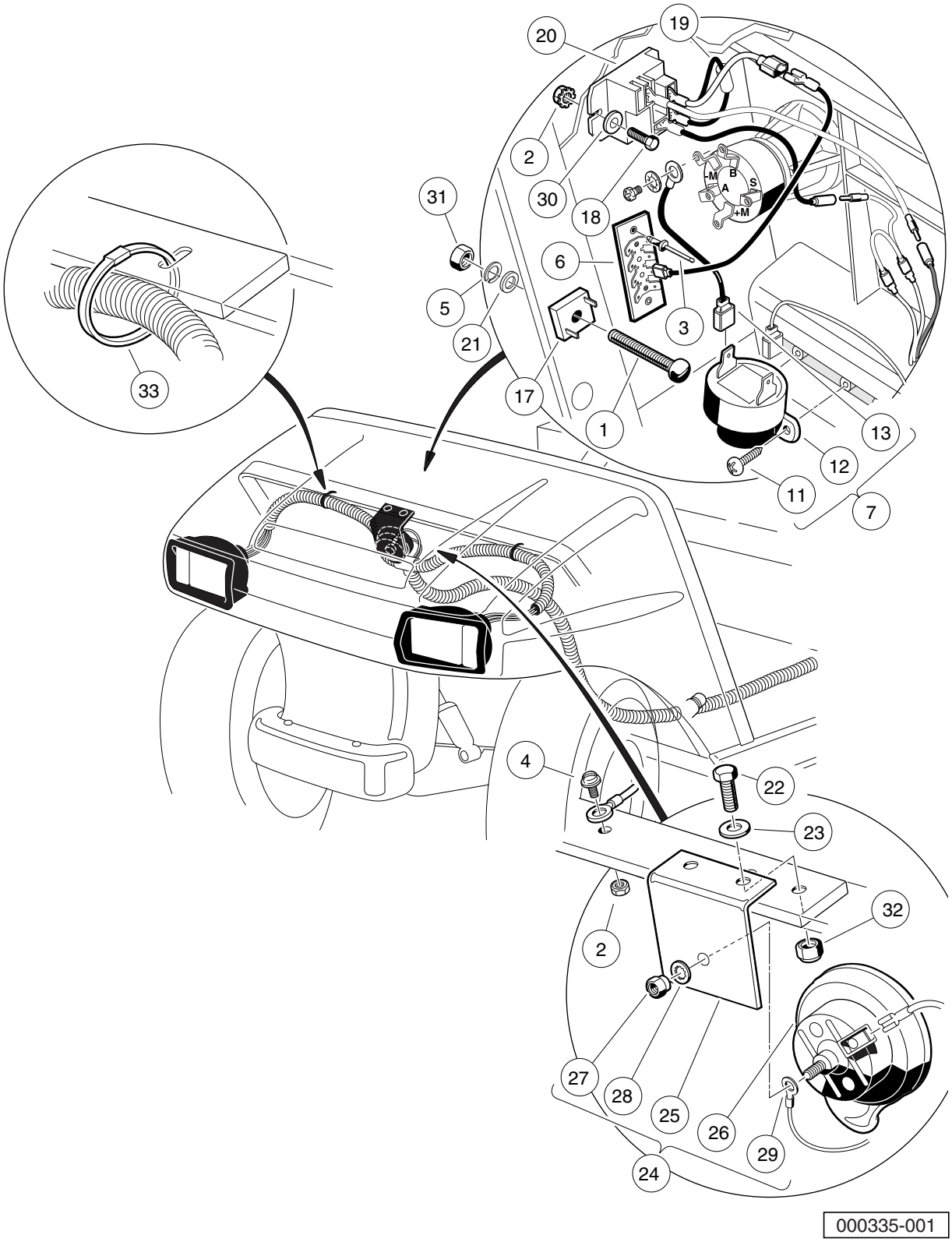
19
20
2
30
18
31
6
5
21
3
17
1
13
12
11
7
33
4
22
23
32
2
27
28
25
26
29
24
-M
B
A
S
+M
000335-001

FRONT BODY ELECTRICAL COMPONENTS

ITEM	PART NO.	DESCRIPTION	QTY
		1 2 3 4	
1	1010909	Screw, #10-32 X 1.25 Rd Hd Mch	1
2	1011229	Locknut, #6-32 Whiz	3
3	1013357	Rivet, 5/32 Aluminum Pop	2
4	N/A	Screw, #6-32 X 1/2 Hex Washer-Head	1
5	1016	Washer, #10 Split Lock	1
6	1016356	Terminal Block with Insulator	1
7	1016859	Kit, Reverse Buzzer (includes items 8 through 16)	1
8	1011229	Locknut, #6-32 Whiz	1
9	1012431	Washer, #4 Flat	2
10	N/A	Screw, #6-32 X 1/2 Hex Washer-Head	1
11	1016849	Screw, #4-24 X 0.33 Pan-Head Machine	2
12	1016851	Buzzer, Reverse (9-48 VDC)	1
13	N/A	Wire Assembly Black #18	1
14	8056	Screw, #4-40 X 0.75 Round-Head Machine	2
15	8057	Nut, #4-40 Hex Machine	2
16	8058	Lockwasher, #4 Helical Split	2
17	1017721	Limiter, Voltage	1
18	1017853	Screw, #6-32 X 0.75 Hex-Head Machine	2
19	101914401	Assembly, Voltage Suppressor	1
20	102199001	Relay, 12-Volt	1
21	183	Washer, #10 Type A Flat	1
22	304	Screw, 1/4-20 X 1.0 Hex-Head Cap	2
23	332	Washer, 1/4 Type A Narrow Flat	2
24	4029	Horn (includes items 25 through 29)	1
25	1011825	Horn Bracket	1
26	N/A	Horn, 12-VDC	1
27	101955101	Nut, M6 Hex	1
28	7820	Washer, 5/16 Internal-Tooth	1
29	N/A	5/16 Ring Term.	1
30	7591	Washer, #6 Flat	2
31	7893	Nut, #10-32 Hex	1
32	8233	Locknut, 1/4-20 Nylon Insert	2
33	8639	Tie Wrap, 11" Nylon	4

Note: Items 8 through 10, and 14 through 16 are included in the reverse buzzer kit, but are not used in this application.

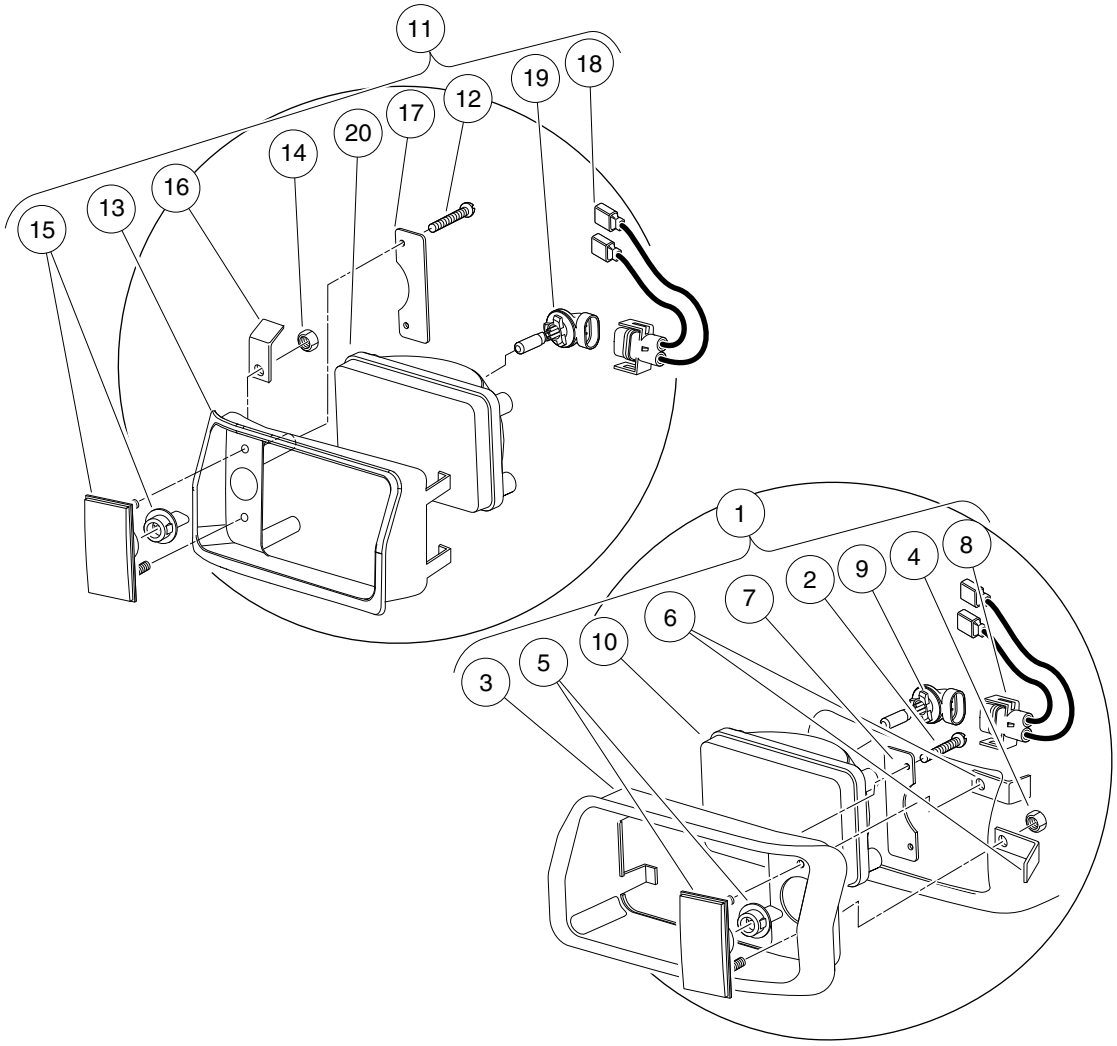

000073-001

ITEM	PART NO.	DESCRIPTION	QTY
		1 2 3 4	
1	101988001	Headlight Assembly, Driver-Side Single Beam (includes items 2 through 10)	1
2	1013461	Screw, #10-16 Hex-Head Hi-Lo	2
3	1016880	Headlight Bezel, Left	1
4	1017	Nut, #10-24 Stainless-Steel Hex Machine	2
5	1017062	Turn Signal Lens Assy	1
6	1017064	Mounting Bracket	2
7	1017065	Retainer, Headlight	1
8	101987901	Connector Harness Assembly, Headlight	1
9	101988101	Bulb, Headlight	1
10	101988201	Lens, Headlight	1
11	101988002	Headlight Assy, Passenger-Side Single Beam (includes items 12 through 20)	1
12	1013461	Screw, #10-16 Hex-Head Hi-Lo	2
13	1016879	Headlight Bezel, Right	1
14	1017	Nut, #10-24 Stainless-Steel Hex Machine	2
15	1017062	Turn Signal Lens Assy	1
16	1017064	Mounting Bracket	2
17	1017065	Retainer, Headlight	1
18	101987901	Connector Harness Assembly, Headlight	1
19	101988101	Bulb, Headlight	1
20	101988201	Lens, Headlight	1

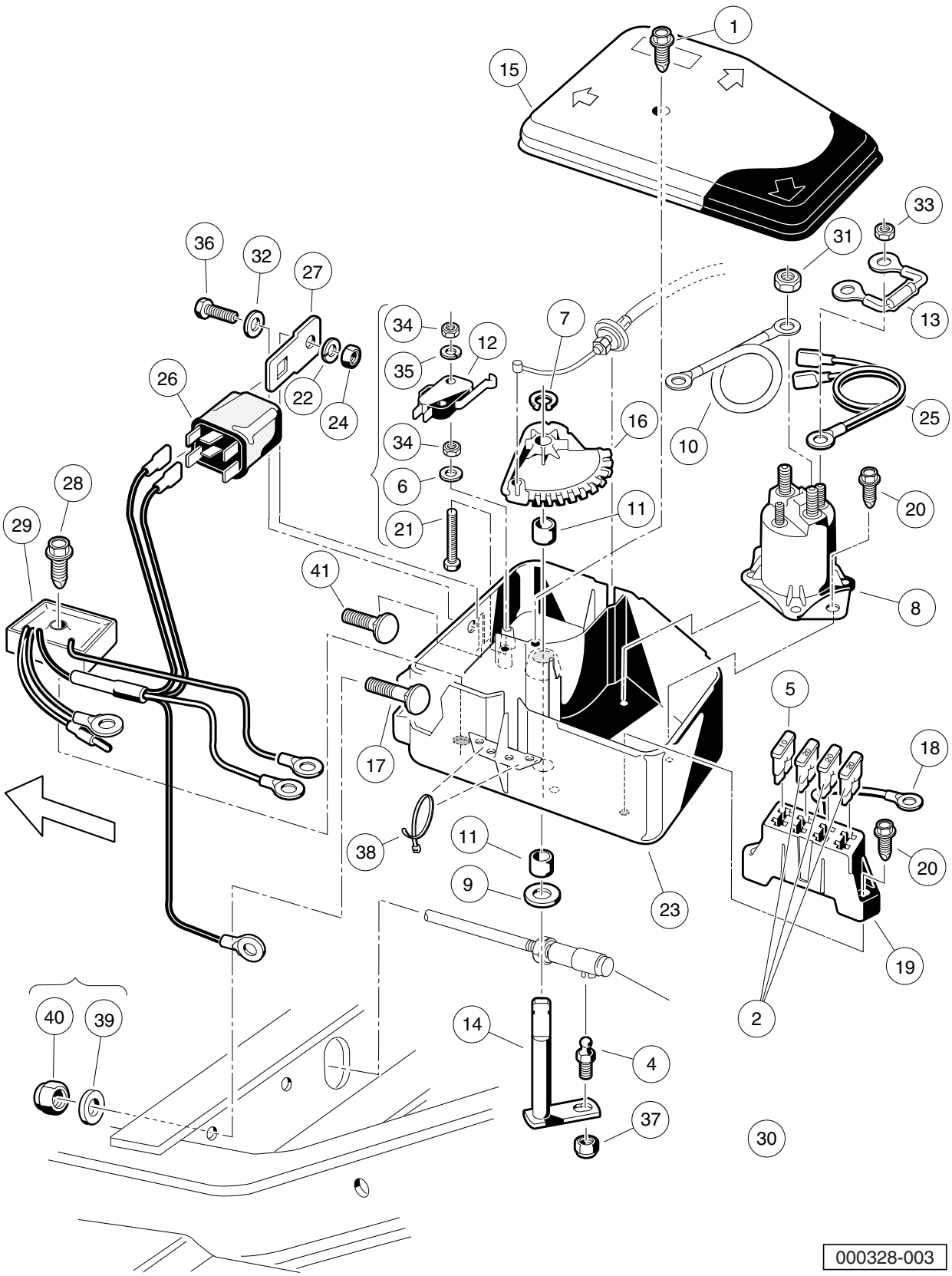
1
15
33
31
13
36
32
27
34
12
7
35
26
22
24
16
10
25
34
6
28
29
21
11
20
41
8
5
17
18
38
11
20
9
23
19
2
40
39
14
4
37
30
000328-003

ELECTRICAL COMPONENT BOX – VILLAGER 6

ITEM	PART NO.	DESCRIPTION	QTY
		1 2 3 4	
1	1015752	Screw, #12-16 X 0.625 Hi-Lo	1
2	1016423	Fuse, 20-Amp	3
3	N/A	Asm, Electrical Component Box (includes items 4 through 38)	1
4	1010954	Stud, 1/4-28 X 0.560 Ball	1
5	1012295	Fuse, 10-Amp	1
6	1012431	Washer, #4 Flat	2
7	1013589	Ring, 0.338" Internal Retaining	1
8	1013609	Solenoid, 12-Volt	1
9	1014065	Washer, 0.38" ID Delrin Flat	1
10	1014119	Wire Assembly #6 Red	1
11	1014145	Bushing, Secondary Weight, Split	2
12	1014807	Switch, Limit	1
13	1014948	Diode	1
14	1015345	Bell Crank and Shaft Assembly	1
15	1015372	Cover, Electric Box	1
16	1015373	Cam, Electric Box	1
17	1015405	Bolt, Carriage, 5/16-18 X 2.0	1
18	1015737	Wire Assy, #10 Red	1
19	1015741	Fuse Block	1
20	1015752	Screw, #12-16 X 0.625 Hi-Lo	4
21	1015878	Screw, #4-40 Hex Head Machine	2
22	1016	Washer, #10 Split Lock	1
23	1016997	Electrical Component Box	1
24	1017	Nut, #10-24 Stainless-Steel Hex Machine	1
25	N/A	Wire Assembly Orange #18	1
26	1017239	Relay	1
27	1017243	Mounting Bracket, Relay	1
28	101856102	Screw, 1/4-15 X 1.50 Hi-lo Hex	1
29	102803401	Asm, Voltage Regulator Key Sta	1
30	103197301	Asm, Wire Harness, Stretch, Gas	1
31	1242	Nut, 5/16-18 Hex	2
32	183	Washer, #10 Type A Flat	1
33	7893	Nut, #10-32 Hex	2
34	8057	Nut, #4-40 Hex Machine	4
35	8058	Lockwasher, #4 Helical Split	2
36	8450	Screw, #10-24 X 0.50 Hex-Head	1
37	8717	Locknut, 1/4-28 Nylon Insert	1
38	8990	Tie Wrap, 8" Nylon	3
39	1241	Washer, 5/16 Type A Flat	2
40	7473	Locknut, 5/16-18 Nylon Insert	2
41	7818	Bolt, Carriage, 5/16-18 X 1.5	1

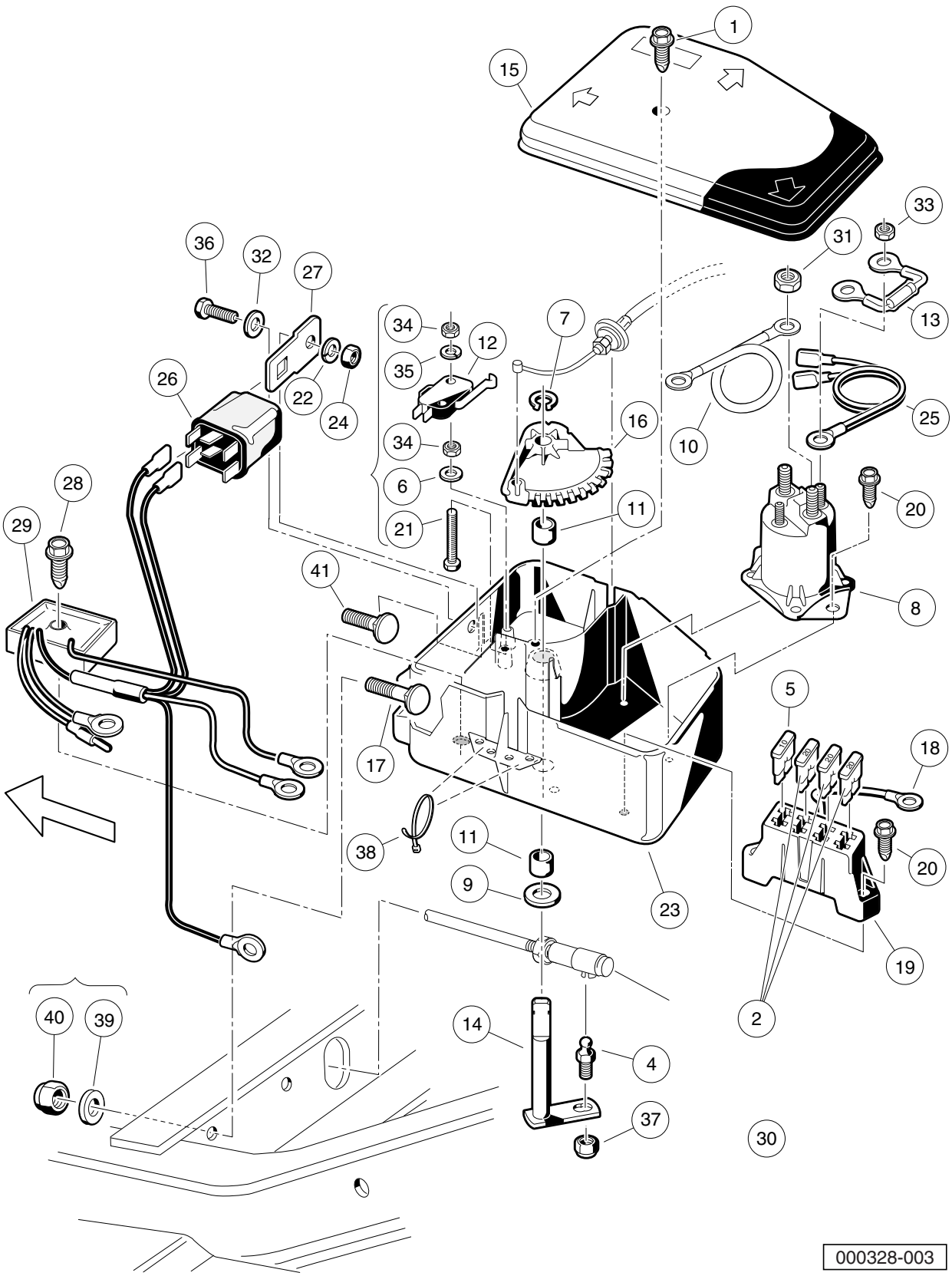
1
15
33
31
13
36
32
27
34
12
7
35
26
22
24
16
25
10
34
6
28
20
29
21
11
41
8
5
17
18
38
11
20
9
23
19
2
40
39
14
4
37
30
000328-003

ELECTRICAL COMPONENT BOX – VILLAGER 8

ITEM	PART NO.	DESCRIPTION	QTY
		1 2 3 4	
1	1015752	Screw, #12-16 X 0.625 Hi-Lo	1
2	1016423	Fuse, 20-Amp	3
3	N/A	Asm, Electrical Component Box (includes items 4 through 38)	1
4	1010954	Stud, 1/4-28 X 0.560 Ball	1
5	1012295	Fuse, 10-Amp	1
6	1012431	Washer, #4 Flat	2
7	1013589	Ring, 0.338" Internal Retaining	1
8	1013609	Solenoid, 12-Volt	1
9	1014065	Washer, 0.38" ID Delrin Flat	1
10	1014119	Wire Assembly #6 Red	1
11	1014145	Bushing, Secondary Weight, Split	2
12	1014807	Switch, Limit	1
13	1014948	Diode	1
14	1015345	Bell Crank and Shaft Assembly	1
15	1015372	Cover, Electric Box	1
16	1015373	Cam, Electric Box	1
17	1015405	Bolt, Carriage, 5/16-18 X 2.0	1
18	1015737	Wire Assy, #10 Red	1
19	1015741	Fuse Block	1
20	1015752	Screw, #12-16 X 0.625 Hi-Lo	4
21	1015878	Screw, #4-40 Hex Head Machine	2
22	1016	Washer, #10 Split Lock	1
23	1016997	Electrical Component Box	1
24	1017	Nut, #10-24 Stainless-Steel Hex Machine	1
25	N/A	Wire Assembly Orange #18	1
26	1017239	Relay	1
27	1017243	Mounting Bracket, Relay	1
28	101856102	Screw, 1/4-15 X 1.50 Hi-lo Hex	1
29	102803401	Asm, Voltage Regulator Key Sta	1
30	103197401	Asm, Wire Harness, Villager 8, Gas	1
31	1242	Nut, 5/16-18 Hex	2
32	183	Washer, #10 Type A Flat	1
33	7893	Nut, #10-32 Hex	2
34	8057	Nut, #4-40 Hex Machine	4
35	8058	Lockwasher, #4 Helical Split	2
36	8450	Screw, #10-24 X 0.50 Hex-Head	1
37	8717	Locknut, 1/4-28 Nylon Insert	1
38	8990	Tie Wrap, 8" Nylon	3
39	1241	Washer, 5/16 Type A Flat	2
40	7473	Locknut, 5/16-18 Nylon Insert	2
41	7818	Bolt, Carriage, 5/16-18 X 1.5	1

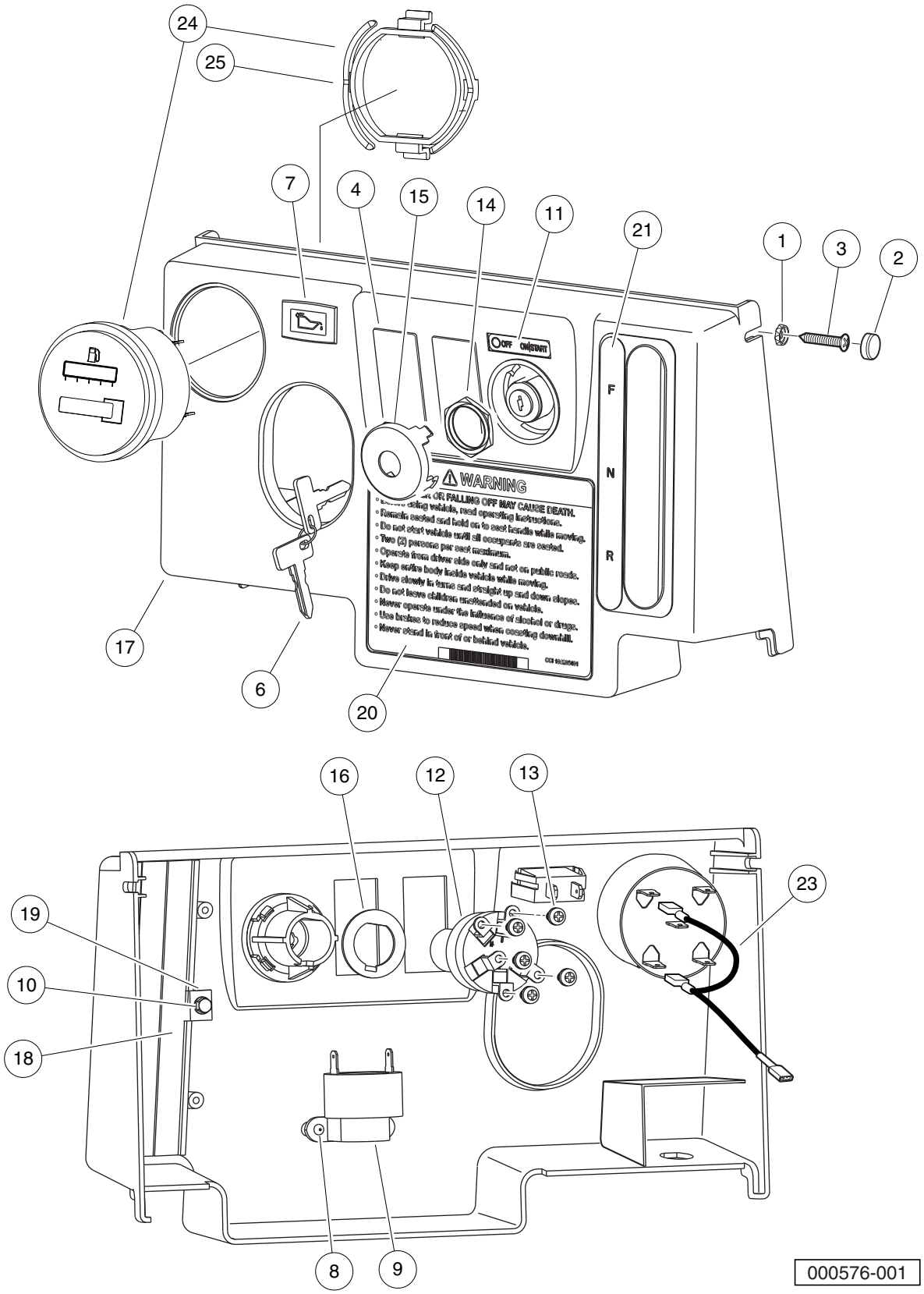
24
25
7
4
15
14
11
21
1
3
2
OFF
F
N
R
WARNING
17
6
20
16
12
13
23
19
10
18
8
9
000576-001

INSTRUMENT PANEL AND ELECTRICAL COMPONENTS – GASOLINE VEHICLES

ITEM	PART NO.	DESCRIPTION	QTY
		1 2 3 4	
1	N/A	Washer, #10 Pan-Head Screw	2
2	1013494	Cover, Screw Head	2
3	1015528	Screw, #10 x 1-1/4 Phillips Head	2
4	103180101	Cover, Hole, Switch, Rocker	2
5	N/A	Asm, Dash, Gas, Key Start (Instrument Panel) (includes items 6 through 22)	1
6	1012505	Keys (set of 2)	1
7	1016630	Light, Oil	1
8	1016849	Screw, #4-24 X 0.33 Pan-Head Machine	2
9	1016851	Buzzer, Reverse (9-48 VDC)	1
10	101804301	Screw, #8 X 0.500, Hex-Head Hi-Lo	2
11	101825102	Decal, Off/On/Start	1
12	101826401	Key Switch, 12-Volt, Off/On/Start	1
13	101830601	Screw and Washer Assembly	5
14	101830701	Nut, Key Switch	1
15	101834502	Cap, Black Key Switch	1
16	101851101	Washer, Key Switch	1
17	102977001	Panel, Dash, Center, Gas (Instrument Panel)	1
18	103199001	Brush, Closeout, FNR	2
19	103199101	Washer, Retaining, Brush, FNR	2
20	103205401	Decal, Warning, Rollover, Utl	1
21	103210201	Decal, Forward/Reverse, Gas	1
22	103390801	Kit, F-h Replmnt Utl Pre2007 (includes items 23 through 26)	1
23	103348501	Asm Wire Meter F-h Jumper	1
24	103348601	Gauge, Fuel-hour,sep Gnd,utl (includes item 25)	1
25	103348201	Clip, Meter, Round	1
26	N/A	Instr, F-h Replmnt Pre2007	1

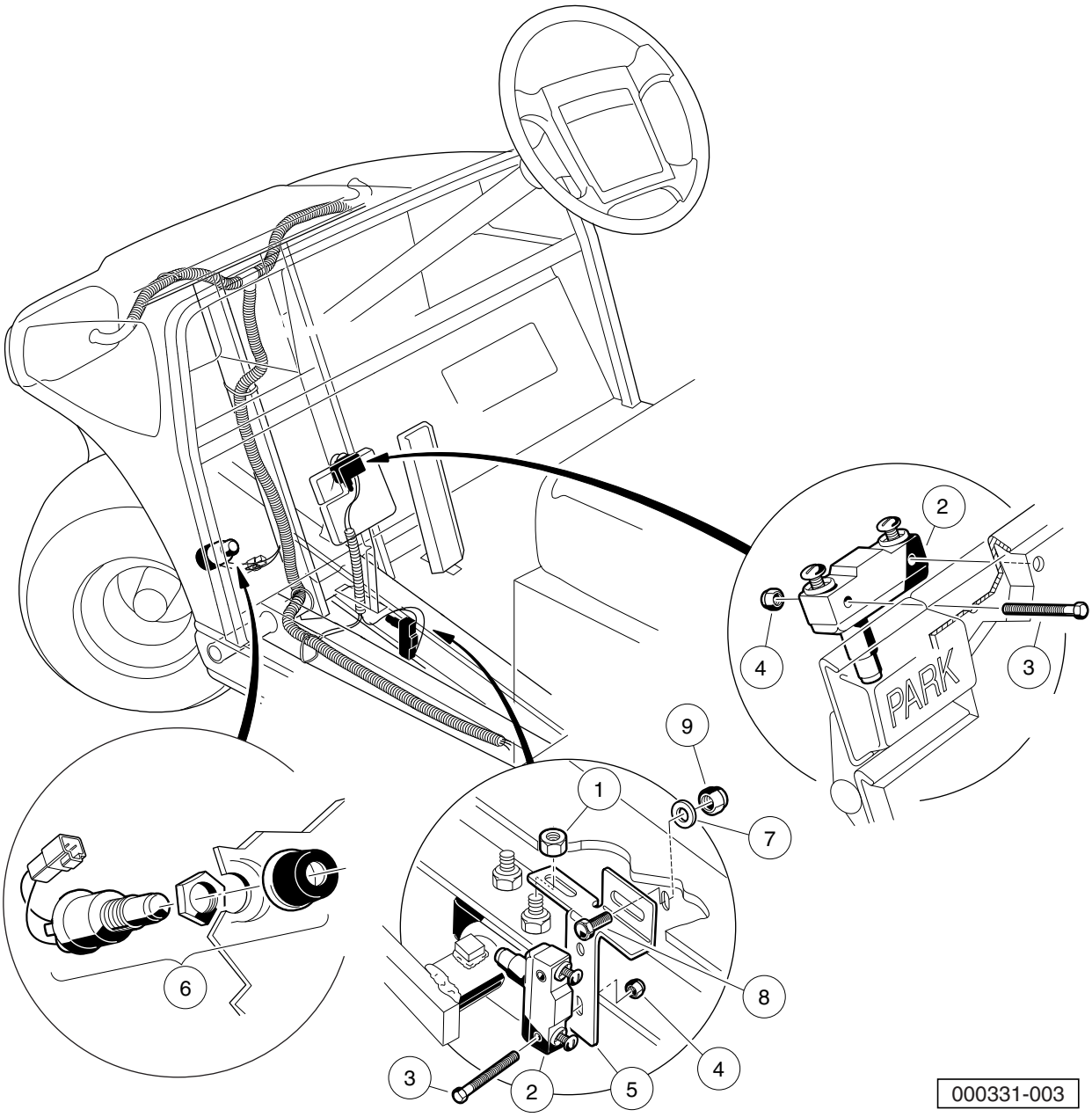
2
4
3
PARK
9
1
7
6
8
3
2
5
4
000331-003

HORN AND BRAKE SWITCHES

ITEM	PART NO.	DESCRIPTION	QTY
		1 2 3 4	
1	1011280	Locknut, 5/16-18	1
2	1011439	Switch, Limit	2
3	1011557	Screw, #6-32 X 1.00 Hex-Head Machine	4
4	101932201	Locknut, #6-32 Nylon	4
5	101957101	Bracket, Brake Light Switch	1
6	101969701	Horn Button and Wire Assembly	1
7	1241	Washer, 5/16 Type A Flat	1
8	7173	Screw, 5/16-18 X 0.75 Hex-Head Cap	1
9	7473	Locknut, 5/16-18 Nylon Insert	1

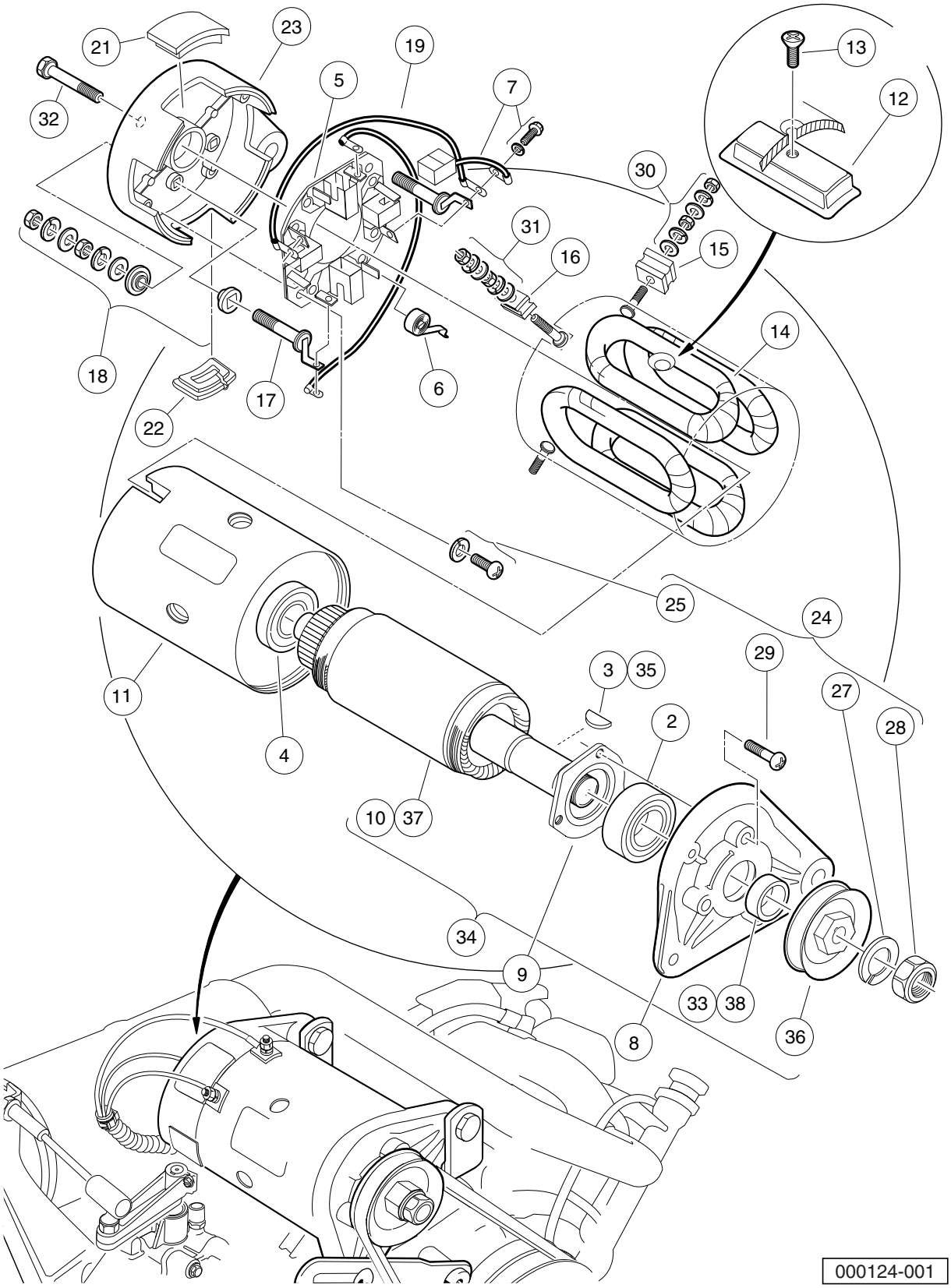
21
23
19
5
7
13
12
32
30
31
16
15
14
18
17
6
22
25
24
29
3
35
27
11
2
28
4
10
37
34
9
33
38
36
8
000124-001

STARTER/GENERATOR ASSEMBLY

ITEM	PART NO.	DESCRIPTION	QTY
		1 2 3 4	
1	101833701	Starter/Generator (cw) (includes items 2 through 33)	1
2	1013001	Bearing, Output Shaft Ball	1
3	1013003	Key, Starter/Generator	1
4	1013005	Bearing, Ball	1
5	101301102	Brush Holder Assembly (cw) (includes item 6)	1
6	101878101	Brush Spring Set	4
7	101869302	Brush and Screw Set (cw)	1
8	101874901	Front Bracket	1
9	101875001	Retainer	1
10	N/A	Armature	1
11	101875201	Field Coil Housing	1
12	101875301	Pole Set	1
13	101875401	Screw Set	1
14	101875501	Field Stator Coil Assembly	1
15	101875601	F Insulator Set	2
16	101875701	DF Insulator	1
17	101875802	A Connector (cw)	1
18	101876001	Screw and Mold Assembly	2
19	101876202	Brush Connector Assembly (cw)	2
20	101876301	Cover Set (includes items 21 and 22)	1
21	N/A	Brush Inspection Port Cover	3
22	N/A	Brush Port Cover w/Drain	1
23	101876402	Rear Bracket (cw)	1
24	101876501	Nut and Screw Set (includes items 25 through 29)	1
25	101896501	Brush Holder Asm Screw	2
26	N/A	Washer, M5 Flat	1
27	N/A	Washer, M14 Lock	1
28	N/A	Nut, Hex, M14 x 2	1
29	N/A	Screw, M5 x 0.8 x 18mm	3
30	101877601	Nut and Washer Set	2
31	101877701	Nut and Washer Set	1
32	101879001	Through Bolt Set	2
33	101939901	Spacer	1
34	101875102	Armature Asm Conversion Kit (includes items 35 through 38)	1
35	1013003	Key, Starter/Generator	1
36	1014289	Pulley, Starter/Generator	1
37	N/A	Armature	1
38	101939901	Spacer	1

Note: Item 36 will ONLY fit Model G425419 Starter/Generator.

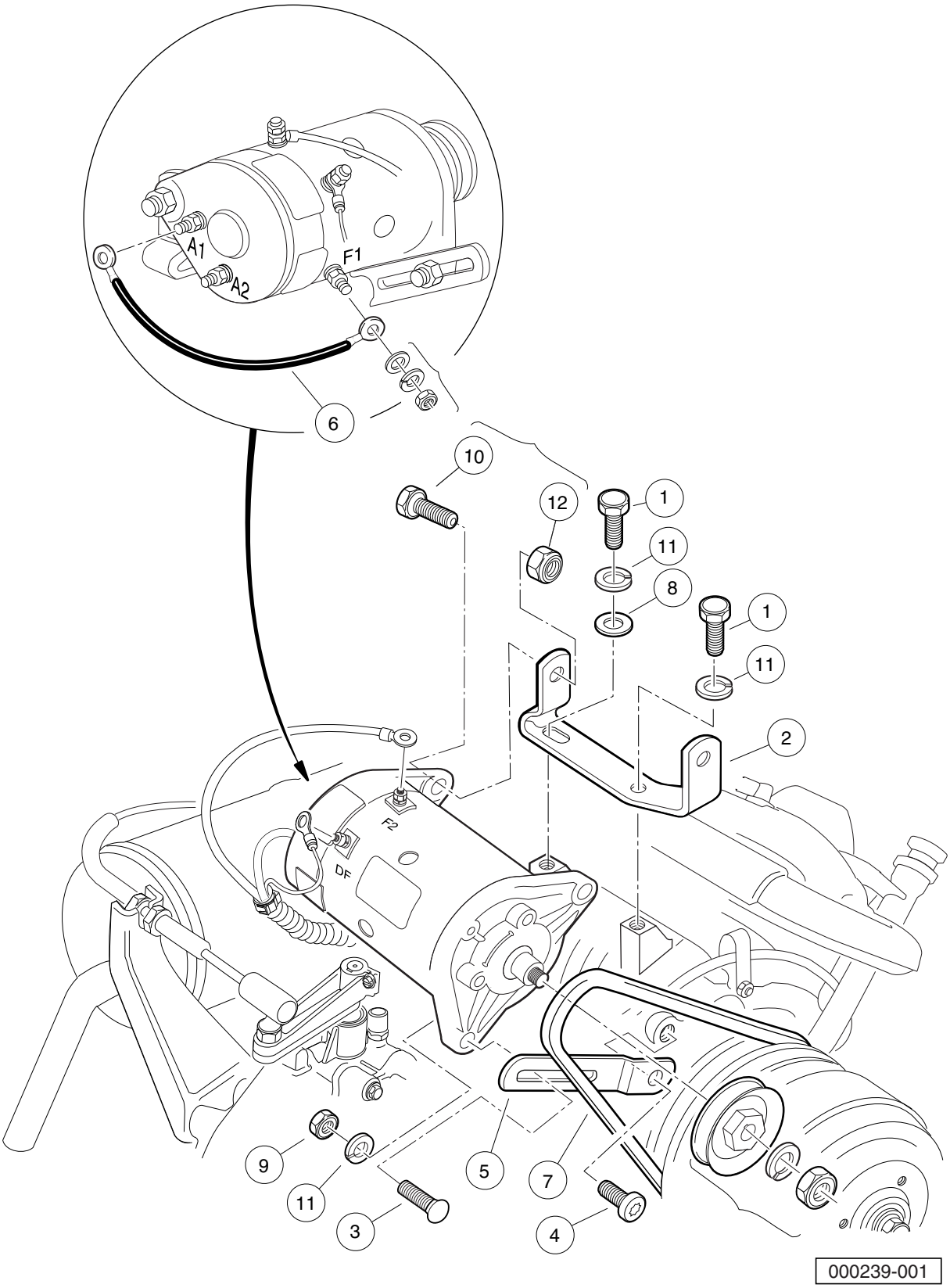
A1
A2
F1
F2
DF
6
10
12
1
11
8
1
11
2
9
11
3
5
7
4
000239-001

FE350 STARTER/GENERATOR MOUNTING

ITEM	PART NO.	DESCRIPTION	QTY
		1 2 3 4	
1	1012830	Screw, M8-125 X 22 Hex-Head	2
2	101524002	Bracket, Starter/Generator Mounting	1
3	1015932	Bolt, Carriage, 5/16-18	1
4	1016074	Screw, M8-1.25 X 18mm Torx	1
5	1016883	Bracket, Starter/Generator Adjustment	1
6	101837301	Wire Assy, #6 Green	1
7	101916701	V-Belt	1
8	1241	Washer, 5/16 Type A Flat	1
9	1242	Nut, 5/16-18 Hex	1
10	705	Screw, Cap-hex Hd 3/8-16x1.25	2
11	7174	Lockwasher, 5/16 Split	3
12	8754	Locknut, 3/8-16 Hex	2

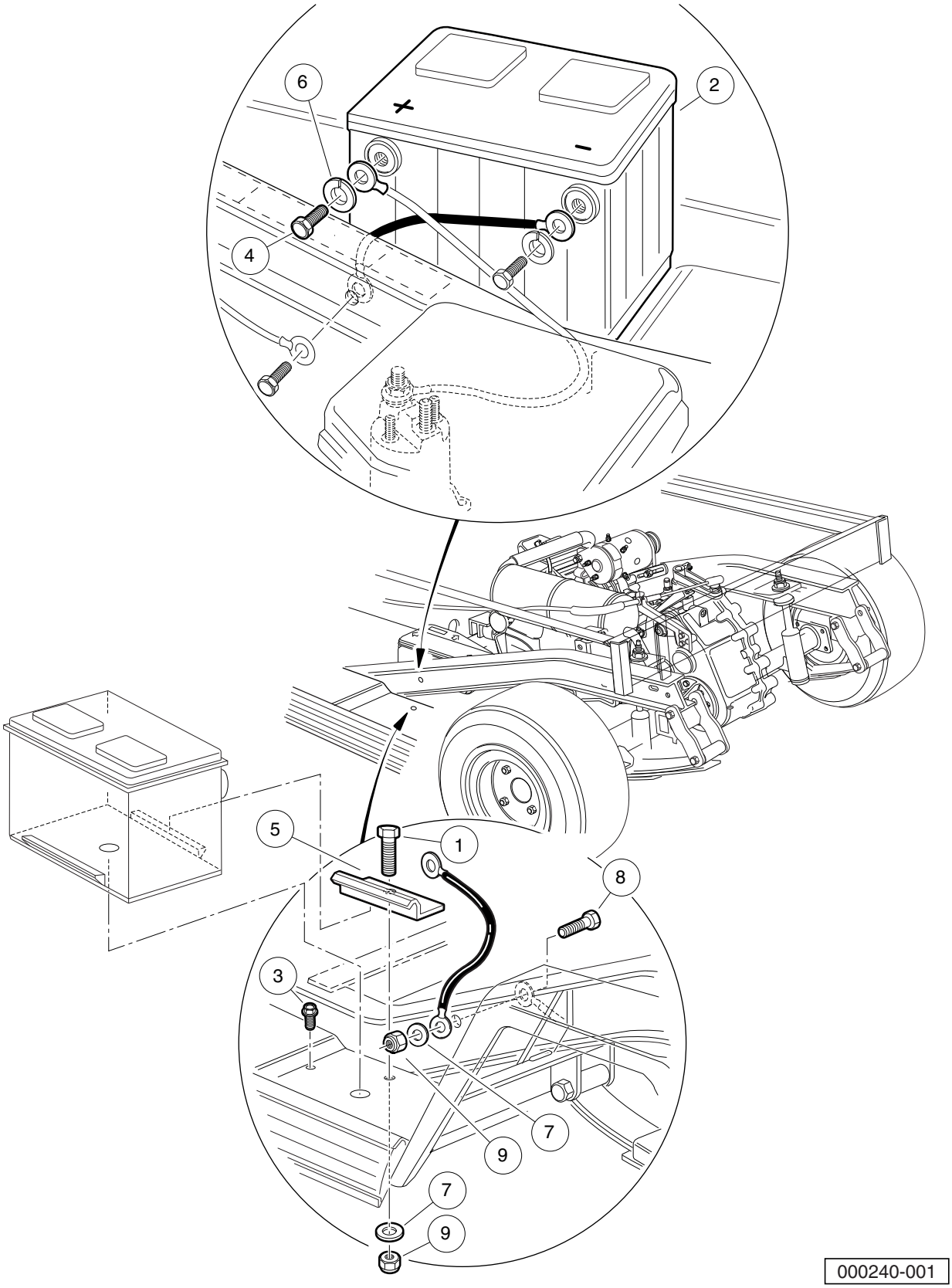
6
2
4
5
1
8
3
7
9
7
9
000240-001

BATTERY – GASOLINE VEHICLE

ITEM	PART NO.	DESCRIPTION	QTY
		1 2 3 4	
1	1010934	Screw, 5/16-18 X 1.00 Hex Cap	1
2	1012328	Battery, 12-Volt	1
3	1014288	Screw, 5/16-18 X 0.75 Thread-Forming	1
4	1014375	Screw, 3/8-16 X 0.50 Stainless Steel Hex-Head	2
5	101898001	Clamp, Battery	1
6	102355301	Lockwasher, 3/8 Stainless Stl	2
7	1241	Washer, 5/16 Type A Flat	2
8	7173	Screw, 5/16-18 X 0.75 Hex-Head Cap	1
9	7473	Locknut, 5/16-18 Nylon Insert	2

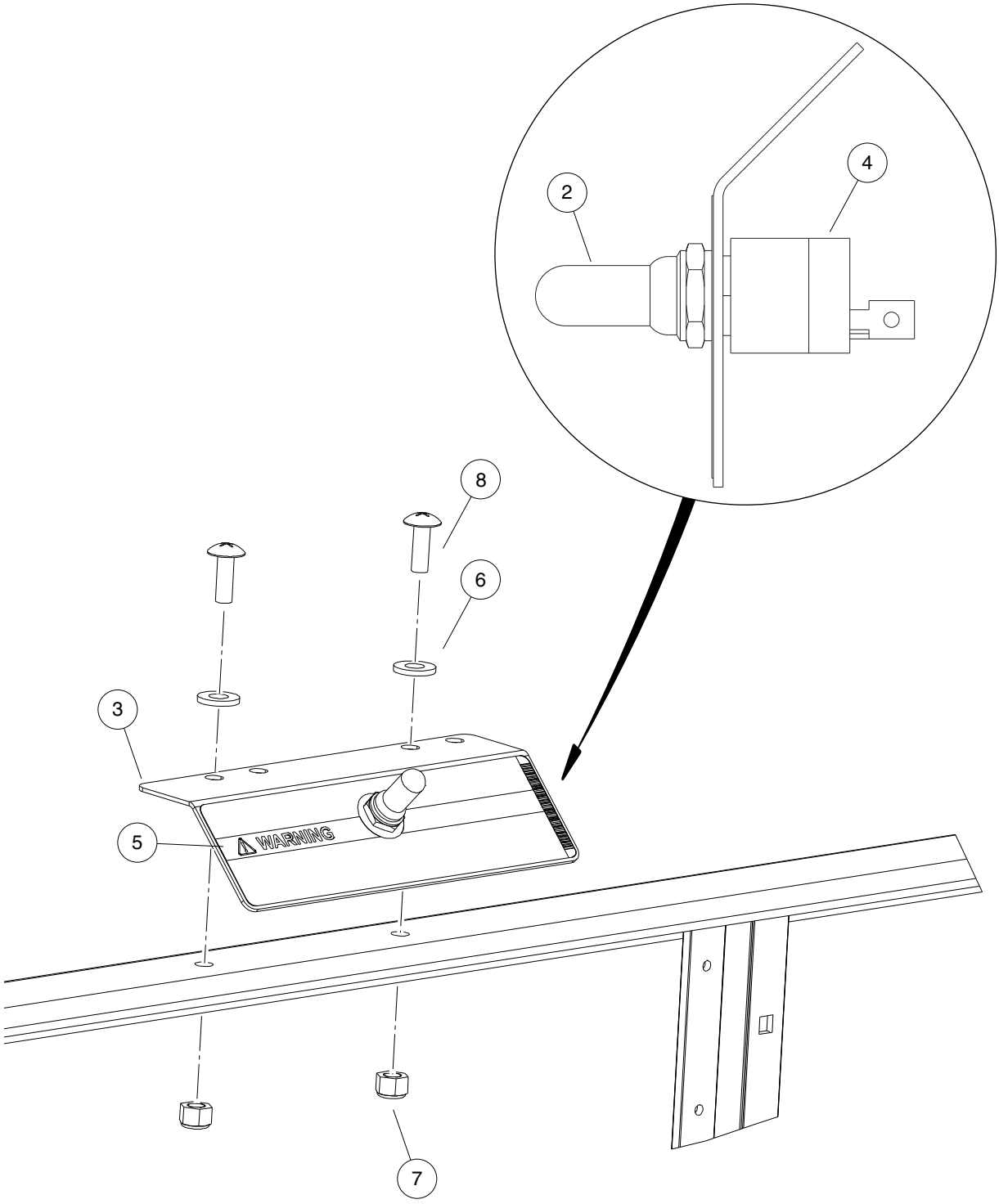
2
4
8
6
3
5
WARNING
7
000755-001

OPERATION AND MAINTENANCE SWITCH

ITEM	PART NO.	DESCRIPTION	QTY
		1 2 3 4	
1	N/A	Switch, Operation/Maintenance (includes items 2 through 5)	1
2	101908401	Boot, Switch	1
3	101922501	Bracket, Tow/Run Switch Mounting	1
4	103198401	Switch, Toggle, SPDT	1
5	103205501	Decal, Run/Service Switch	1
6	332	Washer, 1/4 Type A Narrow Flat	2
7	8233	Locknut, 1/4-20 Nylon Insert	2
8	8248	Screw, 1/4-20 X 0.75 Truss-Head Machine	2

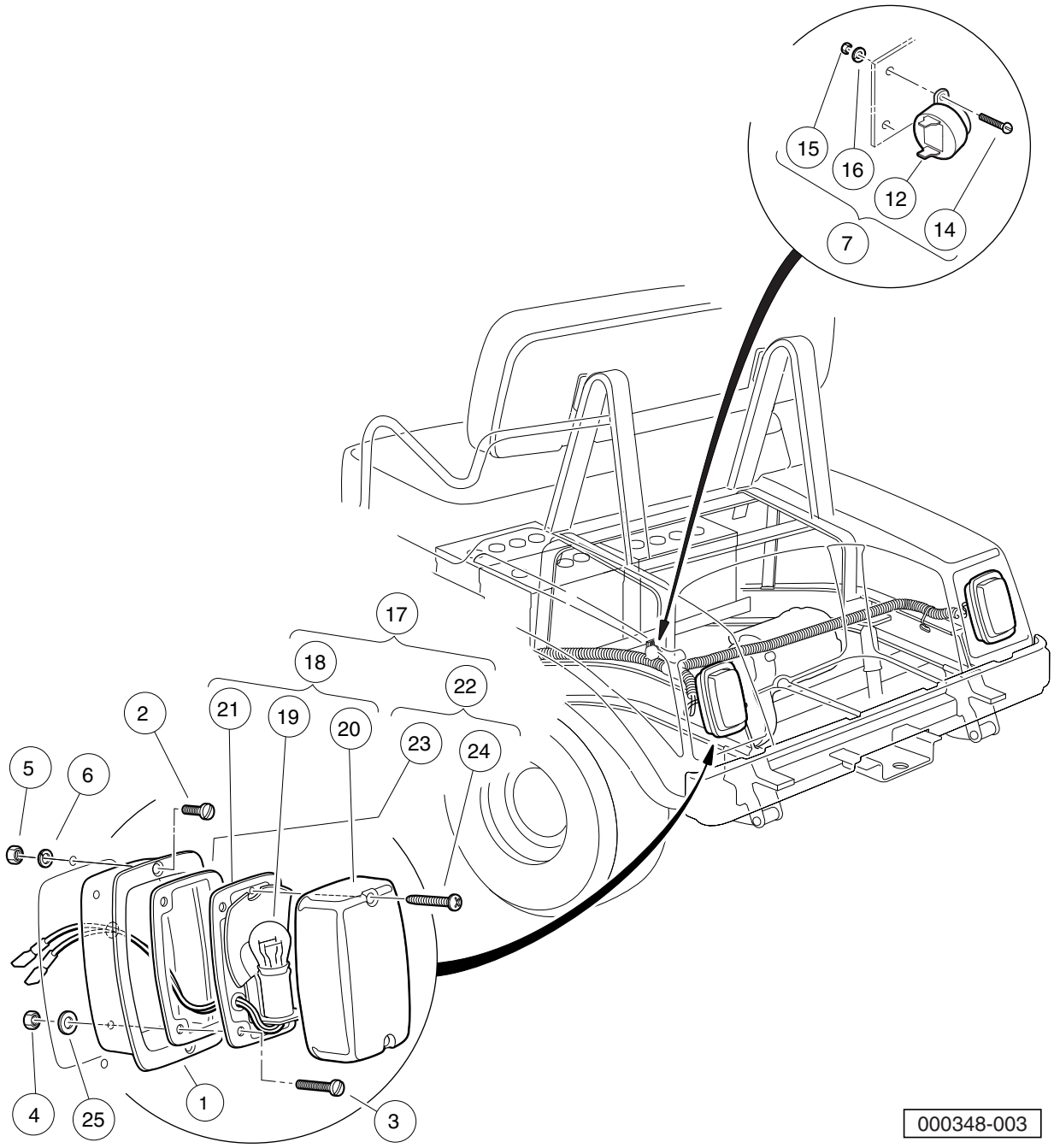
15
16
12
14
7
17
18
22
2
21
19
20
23
24
5
6
4
25
1
3
000348-003

ELECTRICAL COMPONENTS, REAR BODY

ITEM	PART NO.	DESCRIPTION	QTY
		1 2 3 4	
1	1011497	Bezel, Taillight	2
2	1011498	Screw, #8-32 X 0.50 Oval-Head	4
3	1011557	Screw, #6-32 X 1.00 Hex-Head Machine	4
4	1011558	Nut, #6-32 Hex	4
5	1011571	Nut, #8-32 Hex	4
6	1011610	Lockwasher, #8 Helical	4
7	1016859	Kit, Reverse Buzzer (includes items 8 through 16)	1
8	1011229	Locknut, #6-32 Whiz	1
9	1012431	Washer, #4 Flat	2
10	N/A	Screw, #6-32 X 1/2 Hex Washer-Head	1
11	1016849	Screw, #4-24 X 0.33 Pan-Head Machine	2
12	1016851	Buzzer, Reverse (9-48 VDC)	1
13	N/A	Wire Assembly Black #18	1
14	8056	Screw, #4-40 X 0.75 Round-Head Machine	2
15	8057	Nut, #4-40 Hex Machine	2
16	8058	Lockwasher, #4 Helical Split	2
17	1017035	Taillight Assembly (includes items 18 through 22)	2
18	N/A	Light, Tail (includes items 19 through 21)	1
19	1011582	Taillight Bulb	1
20	1011843	Taillight Lens	1
21	N/A	Base, Taillight	1
22	1017699	Hardware Kit, Tail Light (includes items 23 and 24)	1
23	N/A	Gasket	1
24	N/A	Screw, Tapered	2
25	7591	Washer, #6 Flat	4

6

G

FE350 ENGINE WITH ACR (KEY-START VEHICLES)

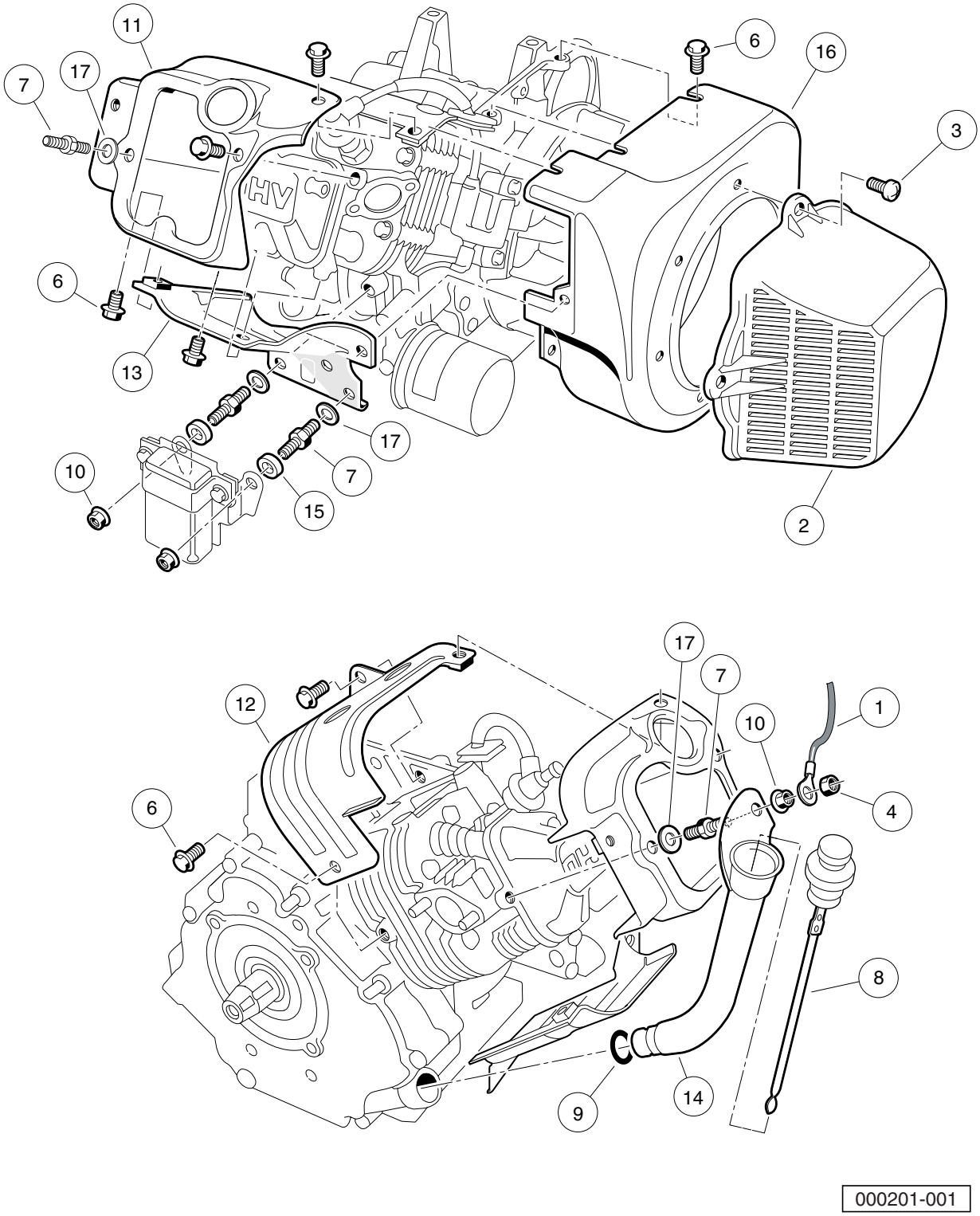

000201-001

FE350 ENGINE WITH ACR (AUTOMATIC COMPRESSION RELEASE) – SHROUDS AND BRACKETS

ITEM	PART NO.	DESCRIPTION	QTY
		1 2 3 4	
1	1015332	Wire Assembly, #10, Uninsulated	1
2	1015649	Shroud, Fan	1
3	1015969	Screw, M6-1.00 X 10mm Pan Hd	4
4	101887601	Locknut, M6-1.00 Nylon Insert	1
5	101953801	Engine, FE350 (cw) with ACR * (includes items 6 through 17)	1
6	1016456	Bolt, Flange Head, M6 x 1 x 12 mm	14
7	1016507	Bolt, Two-Ended	3
8	1016531	Dipstick	1
9	1016539	O-Ring	1
10	1016547	Nut	3
11	1017474	Shroud, Engine	1
12	1017475	Shroud, Engine	1
13	1017476	Shroud, Engine	1
14	1017486	Tube, Oil Filler	1
15	1017500	Spacer 6.50 X 12 X 5.5	2
16	101916101	Housing, FE350 Fan	1
17	N/A	Washer, 6mm Flat	3

* Note: FE350 engine component listings span several pages.

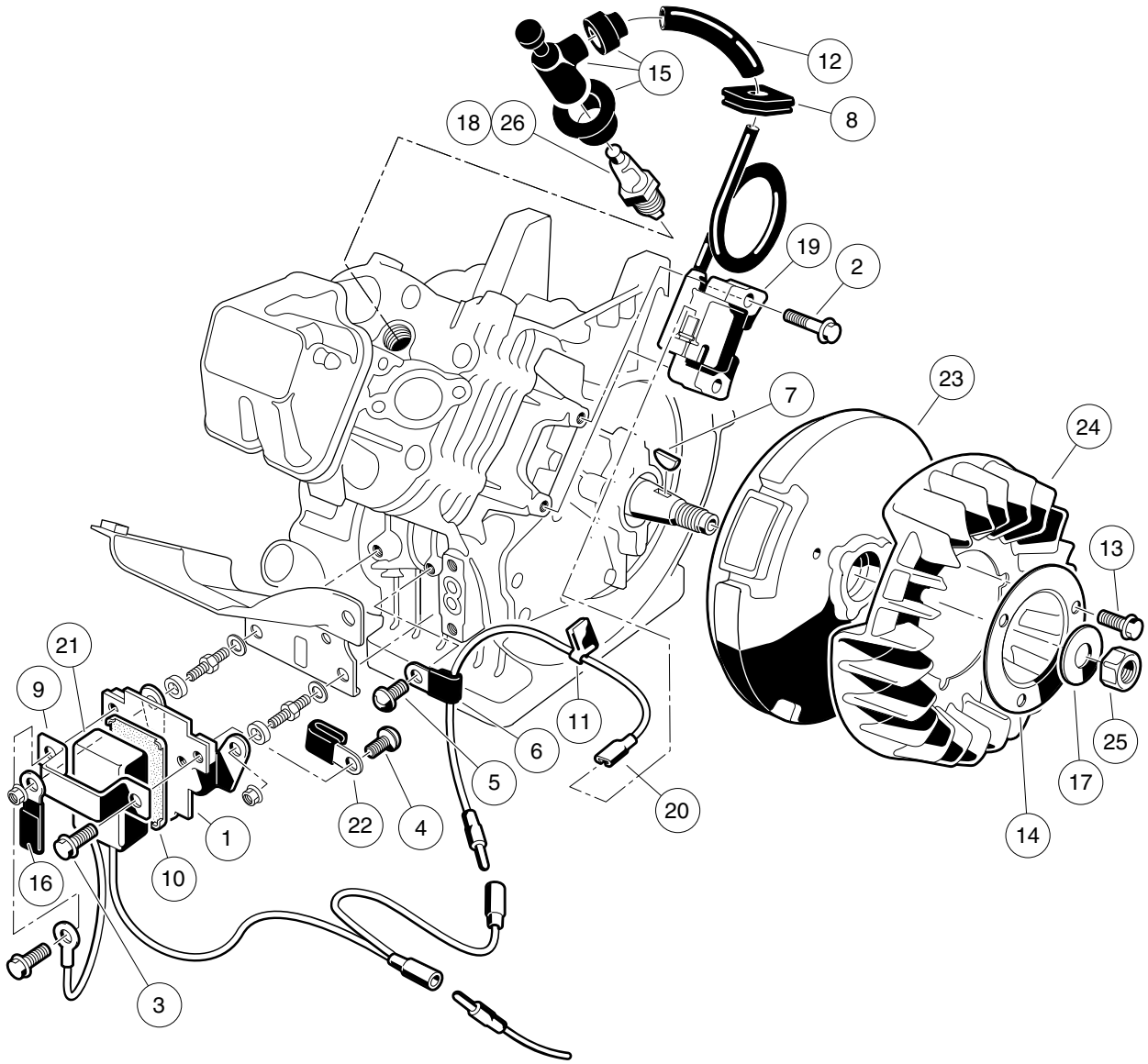

000202-001

AS11 FE350 ENGINE – IGNITION COMPONENTS AND FLYWHEEL

ITEM	PART NO.	DESCRIPTION	QTY
		1 2 3 4	
1	1016445	Bracket, RPM Limiter	1
2	1016455	Bolt, Flange Head	2
3	1016456	Bolt, Flange Head, M6 x 1 x 12 mm	2
4	1016497	Screw, Pan WP Cross	1
5	1016544	Screw	1
6	1016561	Clamp	1
7	1016562	Key	1
8	1016578	Grommet	1
9	1016579	Band, RPM Limiter Mount	1
10	1016586	Damper, RPM Limiter	1
11	1016587	Clamp	1
12	1016588	Tube, 7mm X 10mm X 70mm	1
13	1017448	Bolt, Flanged	3
14	1017455	Plate, Flywheel Fan	1
15	1017463	Cap Asm Plug	1
16	1017468	Clamp	1
17	1017490	Washer, Flat	1
18	101881101	Spark Plug, OHV (Autolite)	1
19	101909201	Coil, Ignition	1
20	101909301	Lead Wire Assy	1
21	101909401	Limiter, RPM	1
22	N/A	Clamp, Steel	1
23	101916201	Flywheel	1
24	101916301	Fan (cw)	1
25	N/A	Nut, Hex, 18 mm Fine	1
26	AM10724	Spark Plug, OHV (NGK)	1

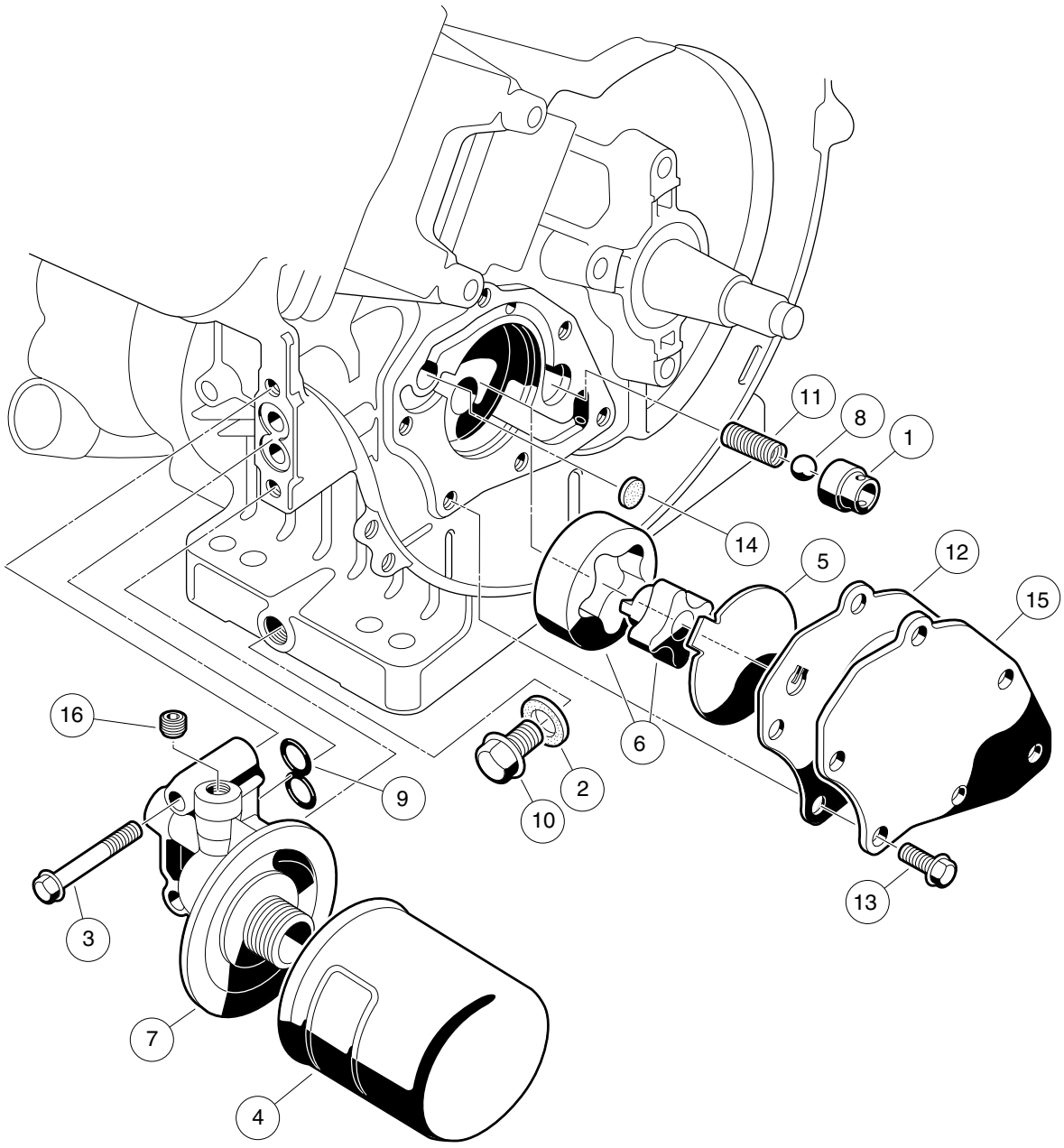

000203-001

ITEM	PART NO.	DESCRIPTION	QTY
		1 2 3 4	
1	1016429	Seat, Value Oil Press Relief	1
2	1016432	Gasket, Drain Plug	1
3	1016457	Bolt, Flange Head	2
4	1016467	Filter, Oil	1
5	1016473	Plate, Oil Pump	1
6	101648203	Oil Pump And Rotor	1
7	1016502	Bracket, Oil Filter Mount	1
8	1016537	Ball, Steel, Press, Relief	1
9	1016570	O-Ring	1
10	1016576	Plug, Drain	1
11	1016581	Spring	1
12	1017442	Gasket	1
13	1017456	Bolt, Flanged	6
14	1017458	Filter	1
15	1017460	Cover, Pump	1
16	1017507	Plug	2

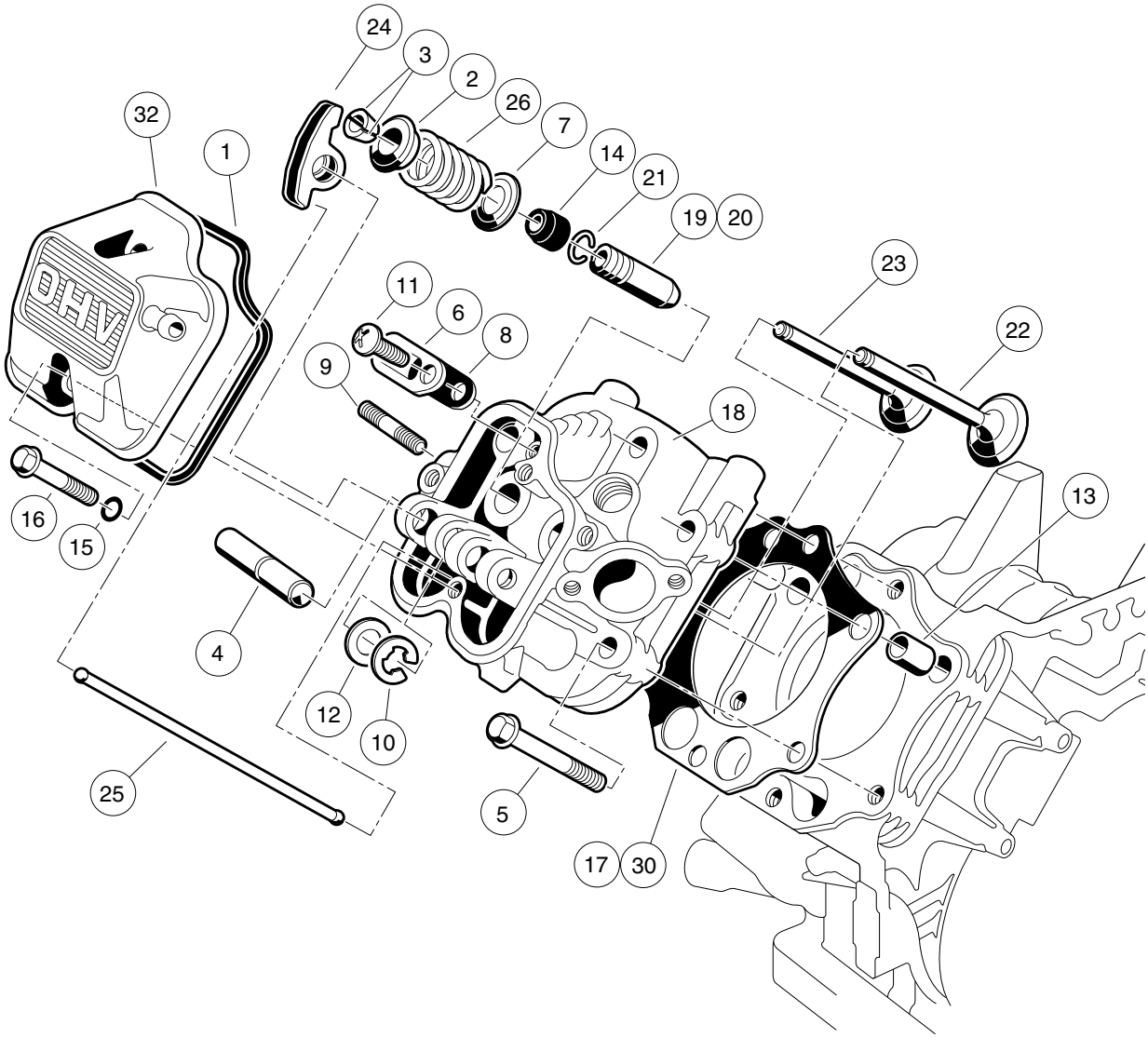
24
3
2
26
7
14
21
19
20
32
1
11
6
8
9
23
22
18
13
16
15
4
12
10
25
5
17
30
OHV

000204-001

AS11 FE350 ENGINE – CYLINDER HEAD

ITEM	PART NO.	DESCRIPTION	QTY
		1 2 3 4	
1	1016436	Gasket, Rocker Case	1
2	1016449	Retainer, Valve Spring	2
3	1016450	Collet	4
4	1016452	Shaft, Rocker	1
5	1016458	Bolt, Flange Head, M8 x 1.25 x 45 mm	6
6	1016474	Plate	1
7	1016479	Seat, Spring	2
8	1016483	Valve	1
9	1016489	Stud, Two-Ended, M8-1.25	2
10	1016517	Circlip, Type-E	1
11	1016544	Screw	1
12	1016549	Washer, 12.1x19x1.8	1
13	1016563	Pin	2
14	1016566	Seal, Oil	2
15	1016569	O-Ring	2
16	1016583	Bolt, 6x35	2
17	1017434	Gasket, Head	1
18	1017435	Assembly, Cylinder Head, FE350 (includes items 19 through 21)	1
19	1016518	Guide, Valve, Exhaust	1
20	1016519	Guide, Valve	1
21	1016560	Snap Ring	2
22	1017444	Valve, Intake	1
23	1017445	Valve, Exhaust	1
24	1017446	Arm, Rocker	2
25	1017454	Rod, Push	2
26	1017473	Spring, Engine Valve	2
27	102304801	Kit, Gasket, FE350 (includes items 28 through 31)	1
28	1016440	Gasket, Engine to Insulator	1
29	1016904	Gasket, Exhaust	1
30	1017434	Gasket, Head	1
31	1017443	Gasket, Crankcase Cover	1
32	102753401	Case, Rocker -w/o Logo Fe290	1

Note: Item 28 is not a component of the FE350 engine.

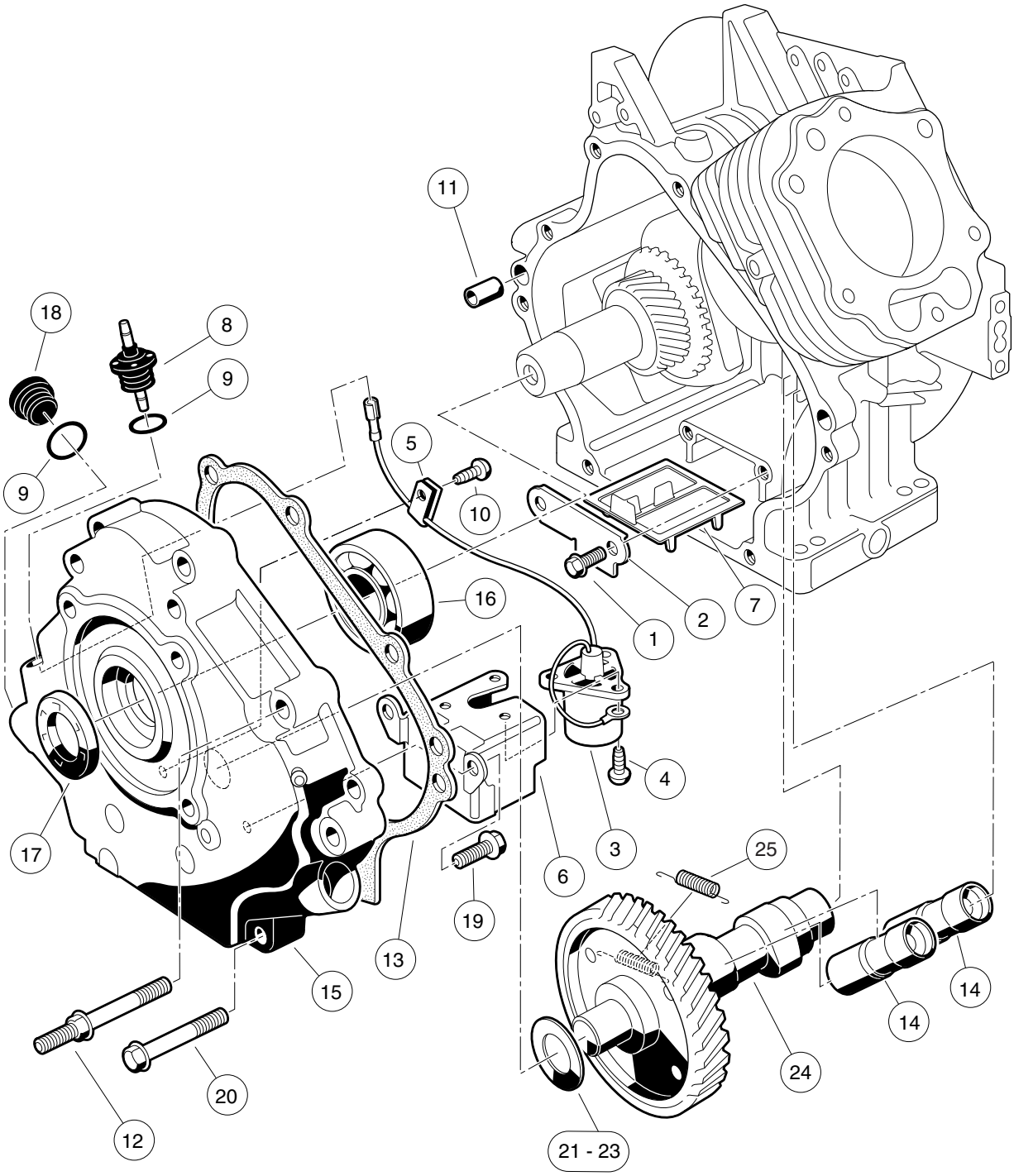

000205-001

FE350 ENGINE WITH ACR – CRANKCASE, CAMSHAFT, AND OIL SENSOR

ITEM	PART NO.	DESCRIPTION	QTY
		1 2 3 4	
1	1016454	Bolt, Flange Head, M5 x 0.8 x 8 mm	2
2	1016472	Plate, Oil Filter Screen	1
3	1016494	Sensor, Oil Level	1
4	1016496	Screw, Cross Pan-Head, M4 x 0.7 x 8 mm	3
5	1016506	Clamp	1
6	1016510	Bracket, Switch, Oil Level	1
7	1016521	Screen, Oil Filter	1
8	1016535	Connector, Cord	1
9	1016538	O-Ring	2
10	1016544	Screw	1
11	1016564	Pin	2
12	1016584	Bolt, Two-Ended, M8 x 1.25 x 69 mm	2
13	1017443	Gasket, Crankcase Cover	1
14	1017447	Adjuster, Lash	2
15	1017472	Cover Crankcase	1
16	1017487	Bearing, Ball	1
17	1017504	Seal, Oil	1
18	1017508	Plug	1
19	1017513	Bolt	2
20	1017514	Screw, M8-1.25 X 45mm Hex	6
21	101751801	Shim, 0.3	A/R
22	101751802	Shim, 0.4	A/R
23	101751803	Shim, 0.5	A/R
24	102271601	Camshaft, FE350/FE400 with ACR, 44-tooth (includes item 25)	1
25	1017511	Spring	1

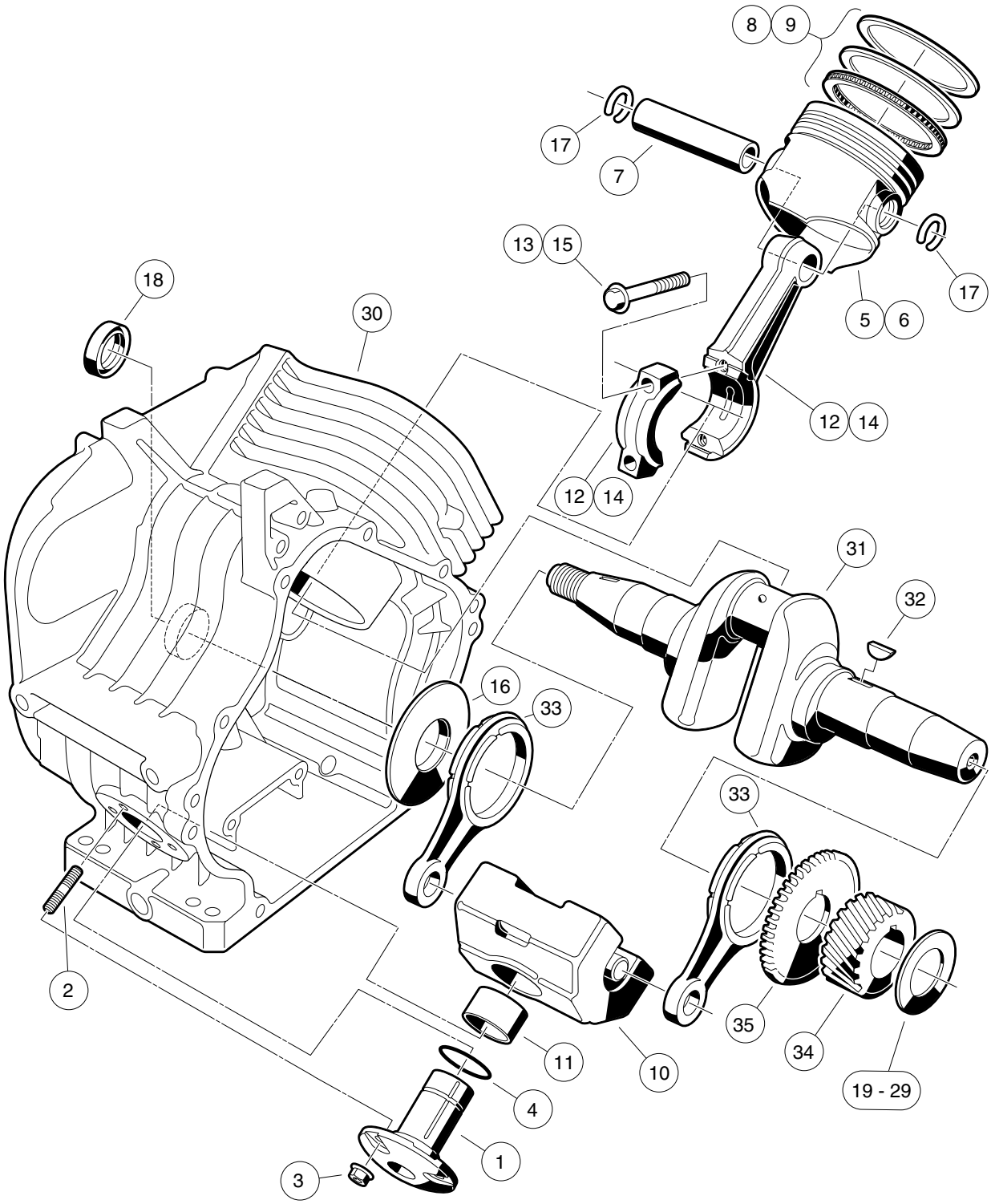
8
9
17
7
13
15
18
30
17
5
6
12
14
12
14
31
32
16
33
33
2
35
34
11
10
19 - 29
4
1
3
000206-001

AS11 FE350 ENGINE – CRANKCASE AND CRANKSHAFT

ITEM	PART NO.	DESCRIPTION	QTY
		1 2 3 4	
1	1016470	Shaft, Guide, Counterbalance	1
2	1016541	Stud, 6x14	4
3	1016547	Nut	4
4	1016571	O-Ring	1
5	101744901	Piston, Standard	1
6	101744902	Piston, 0.50 mm Oversize	1
7	1017450	Pin, Piston	1
8	101745101	Ring Set, Standard Piston	1
9	101745102	Ring Set, Piston, 0.50 mm Oversize	1
10	1017453	Weight (includes item 11)	1
11	1017510	Bearing, Plain	1
12	101745701	Asm, Con. Rod Std (includes item 13)	1
13	1017512	Bolt	2
14	101745702	Rod Assembly Connnecting Rod 0.5mm (includes item 15)	1
15	1017512	Bolt	2
16	1017501	Spacer	1
17	1017502	Snap Ring	2
18	1017503	Seal, Oil	1
19	101773301	Shim, Crankshaft, 1.18mm	A/R
20	101773302	Shim, Crankshaft, 1.25mm	A/R
21	101773303	Shim, Crankshaft, 1.32mm	A/R
22	101773304	Shim, Crankshaft, 1.39mm	A/R
23	101773305	Shim, Crankshaft, 1.46mm	A/R
24	101773306	Shim, Crankshaft, 1.53mm	A/R
25	101773307	Shim, Crankshaft, 1.60mm	A/R
26	101773308	Shim, Crankshaft, 1.67mm	A/R
27	101773309	Shim, Crankshaft, 1.74mm	A/R
28	101773310	Shim, Crankshaft, 1.11mm	A/R
29	101773311	Shim, Crankshaft, 1.81mm	A/R
30	101916001	Crankcase Complete, FE350 (cw)	1
31	102430901	Crankshaft, FE350 Left-Hand, 22-Tooth (includes items 32 through 35)	1
32	1016562	Key	1
33	1017471	Rod	2
34	N/A	Gear, Helical	1
35	N/A	Gear, Spur	1

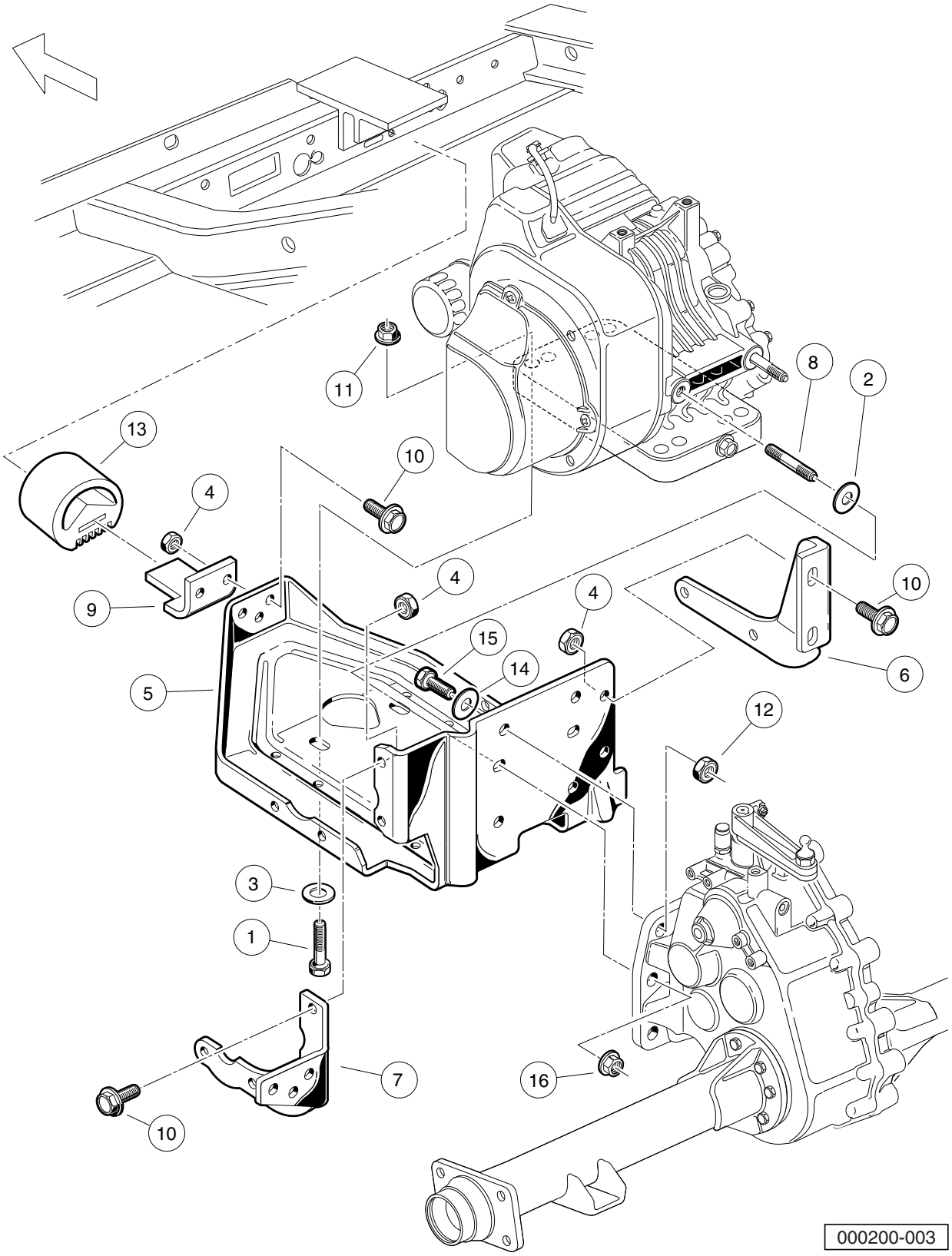
11
8
2
13
10
4
9
4
4
10
15
14
5
6
12
3
1
7
16
10
000200-003

FE350 ENGINE MOUNTING

ITEM	PART NO.	DESCRIPTION	QTY
		1 2 3 4	
1	1010577	Bolt, Hex-Head, 5/16-18 X 1.50	4
2	1011697	Washer, 5/16 Flat	2
3	1012571	Washer, 5/16 Extra Thick Flat	4
4	1013924	Nut, 5/16-24 Hex Head Cone	10
5	101827101	Plate, Engine Mounting	1
6	101832601	Stiffener (PTO Side)	1
7	101832701	Stiffener (Flywheel Side)	1
8	101833101	Stud, M8-1.25 X 50 mm Two-Ended	2
9	101834601	Snubber Bracket	1
10	101884801	Screw, 5/16-24 X 0.875 Grade-8	10
11	101963401	Locknut, 5/16-18 Hex Flange	4
12	102065901	Locknut, 3/8-16 Flanged Dimple	4
13	102540301	Inner Frame Snubber	1
14	334	Washer, 3/8 Type A Flat	4
15	705	Screw, Cap-hex Hd 3/8-16x1.25	4
16	96704416	Nut Flg, M8 X 1.25 Serrated	2

7

G

FUEL, INTAKE, AND GOVERNOR SYSTEM

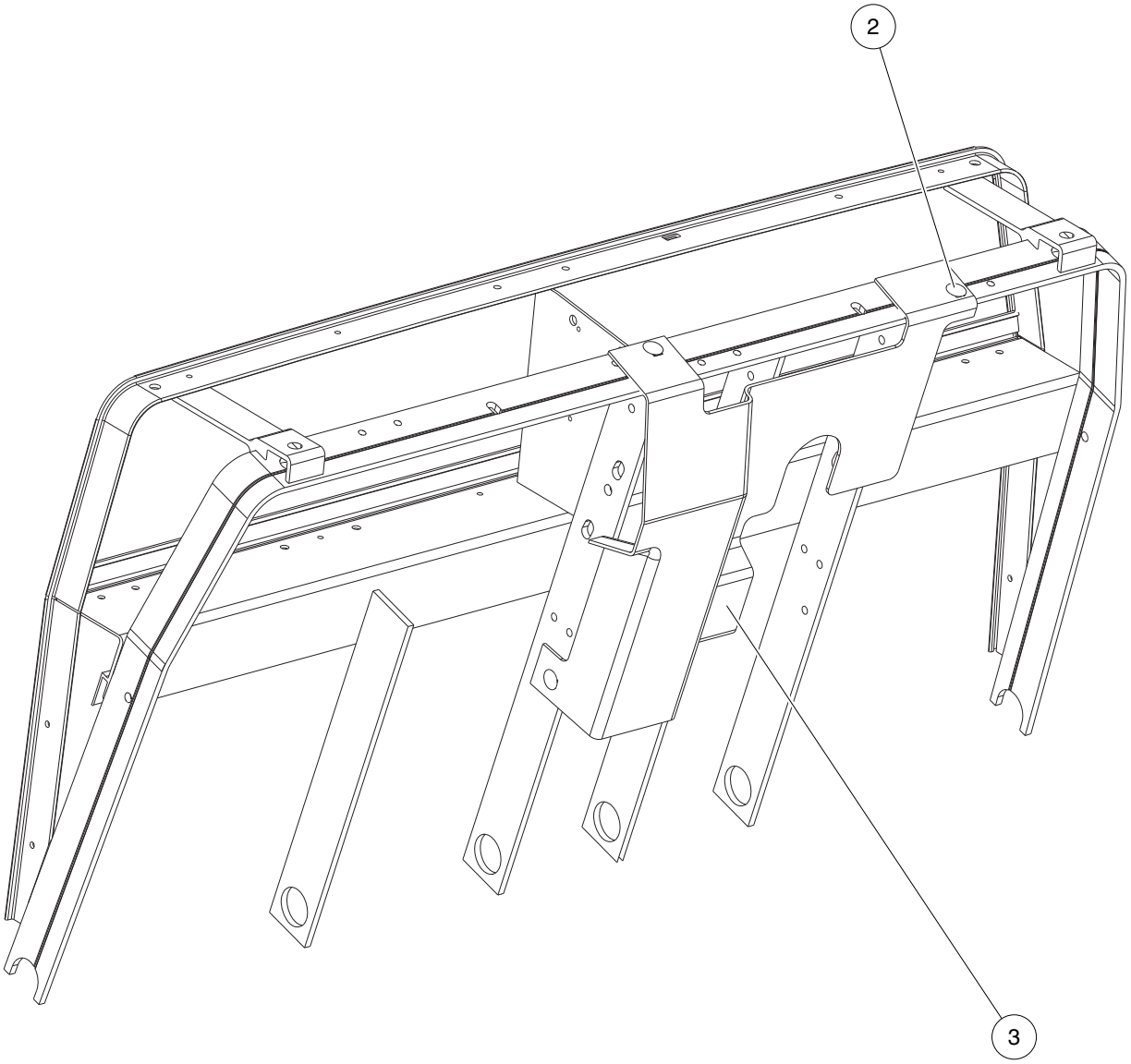

000593-001

SPLASH GUARD

ITEM	PART NO.	DESCRIPTION	QTY
		1 2 3 4	
1	N/A	Instl, Splashguard, Ca (includes items 2 and 3)	1
2	1010434	Barrel - Plastic	3
3	103174401	Splash Guard	1

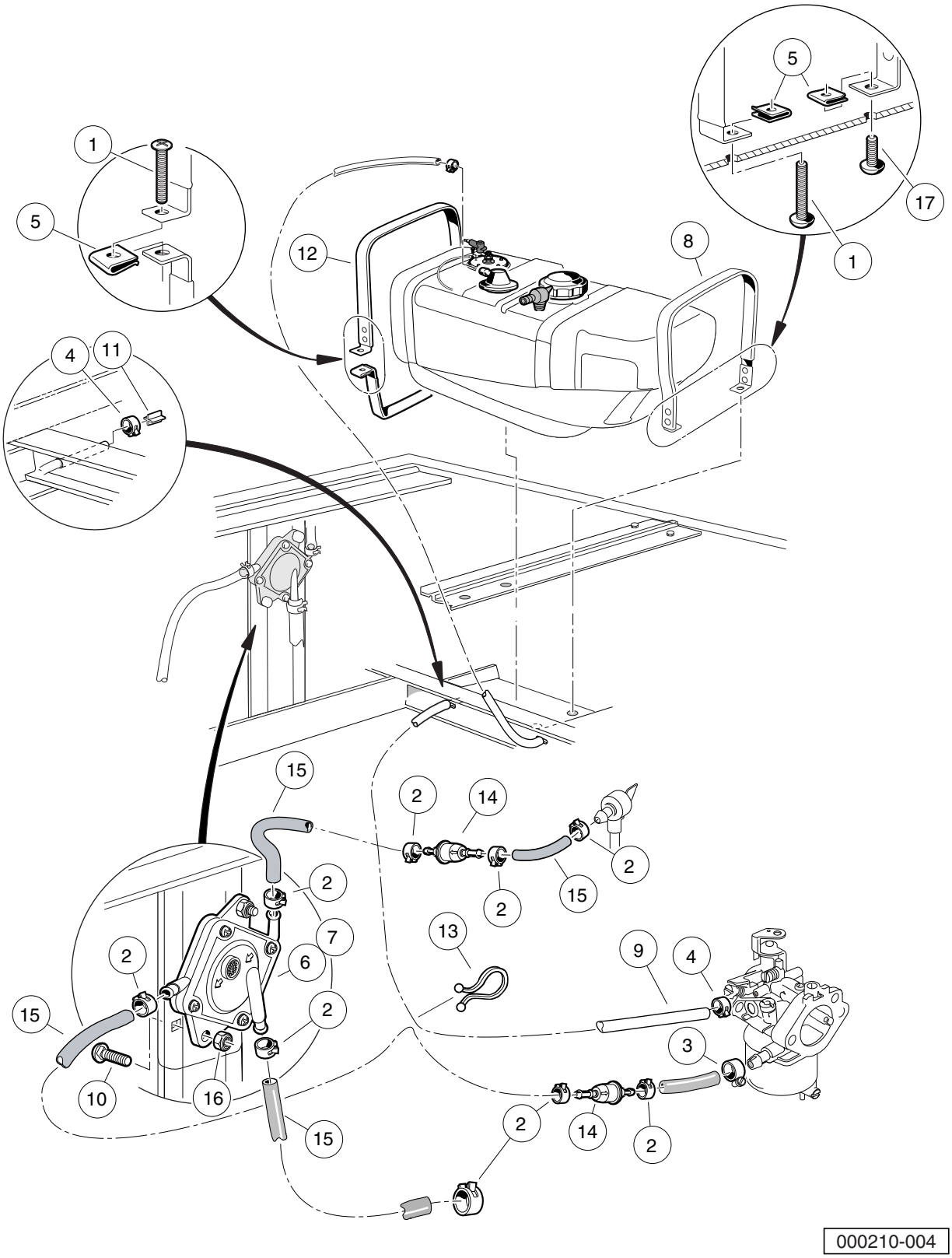
1
5
12
8
5
17
1
4
11
15
2
14
2
2
15
2
7
13
9
4
2
6
15
2
3
10
16
15
2
14
2
000210-004

ITEM	PART NO.	DESCRIPTION	QTY
		1 2 3 4	
1	1011988	Screw, 1/4-20 X 2.00 Phillips Truss-Head	2
2	1012649	Clamp, 0.460 Red Hose	9
3	1013687	Clamp, 3/8" Hose (screw type)	1
4	1013746	Clamp, 0.301 ID Hose	2
5	1014116	Nut, 1/4-20 Speed	3
6	1014523	Pump, Impulse Fuel	1
7	1014524	Kit, Impulse Pump Rebuild	A/R
8	1014928	Fuel Strap Assembly Rear	1
9	1015137	Fuel Line (available by the foot)	A/R
10	1017203	Carriage Bolt	2
11	101824401	Vent Barb	1
12	101955301	Fuel Strap Assy, Front	1
13	101987701	Clamp, Plastic Tie	1
14	102003201	Filter, Fuel, 30 Micron	2
15	102865101	Fuel Line	A/R
16	8233	Locknut, 1/4-20 Nylon Insert	2
17	8248	Screw, 1/4-20 X 0.75 Truss-Head Machine	1
		Note: Total fuel line length: 47 inches (119.4 cm)	

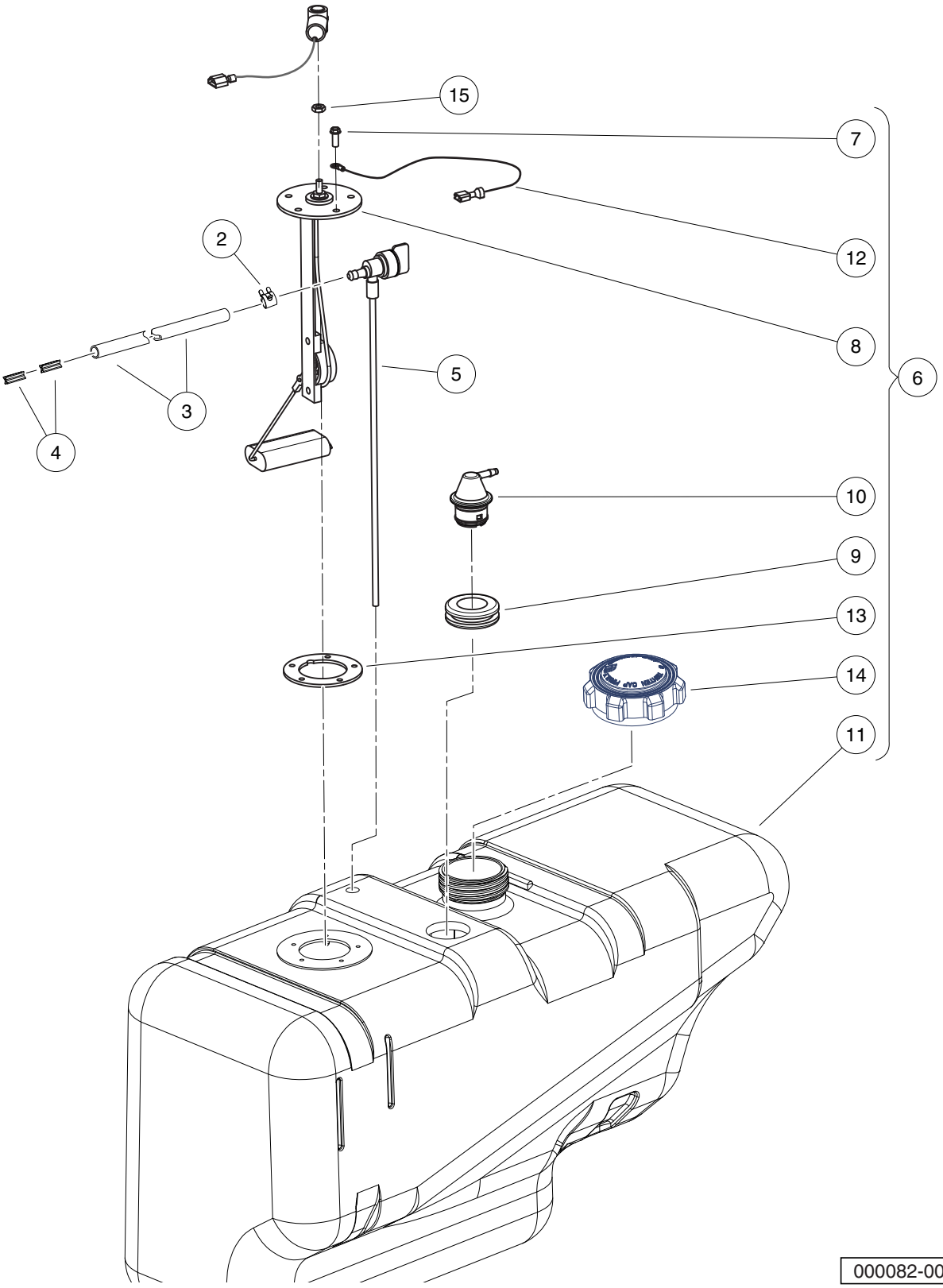
15
7
12
2
8
6
5
3
4
10
9
13
14
11
000082-003

FUEL TANK WITH FUEL LEVEL SENDING UNIT

ITEM	PART NO.	DESCRIPTION	QTY
		1 2 3 4	
1	1016004	Tank Kit w/Sending Unit (includes items 2 through 6)	1
2	1013746	Clamp, 0.301 ID Hose	2
3	1015137	Fuel Line (available by the foot)	1
4	101824401	Vent Barb	2
5	101896901	Fuel Pickup w/Shut-Off Valve	1
6	N/A	Fuel Tank with Sending Unit (includes items 7 through 14)	1
7	1013461	Screw, #10-16 Hex-Head Hi-Lo	5
8	1013462	Sending Unit, Fuel Level *	1
9	1015139	Insulation Grommet	1
10	1015143	Vent, Fuel Tank	1
11	N/A	Fuel Tank with Vent and Sending Unit Hole	1
12	N/A	Wire Assembly #16 Black	1
13	102522001	Gasket, Rubber	1
14	102751601	Cap, Fuel Tank, Gasoline	1
15	8797	Nut, #10-32 Brass Hex	1

* Note: Must replace fuel sending unit gasket when servicing this component.

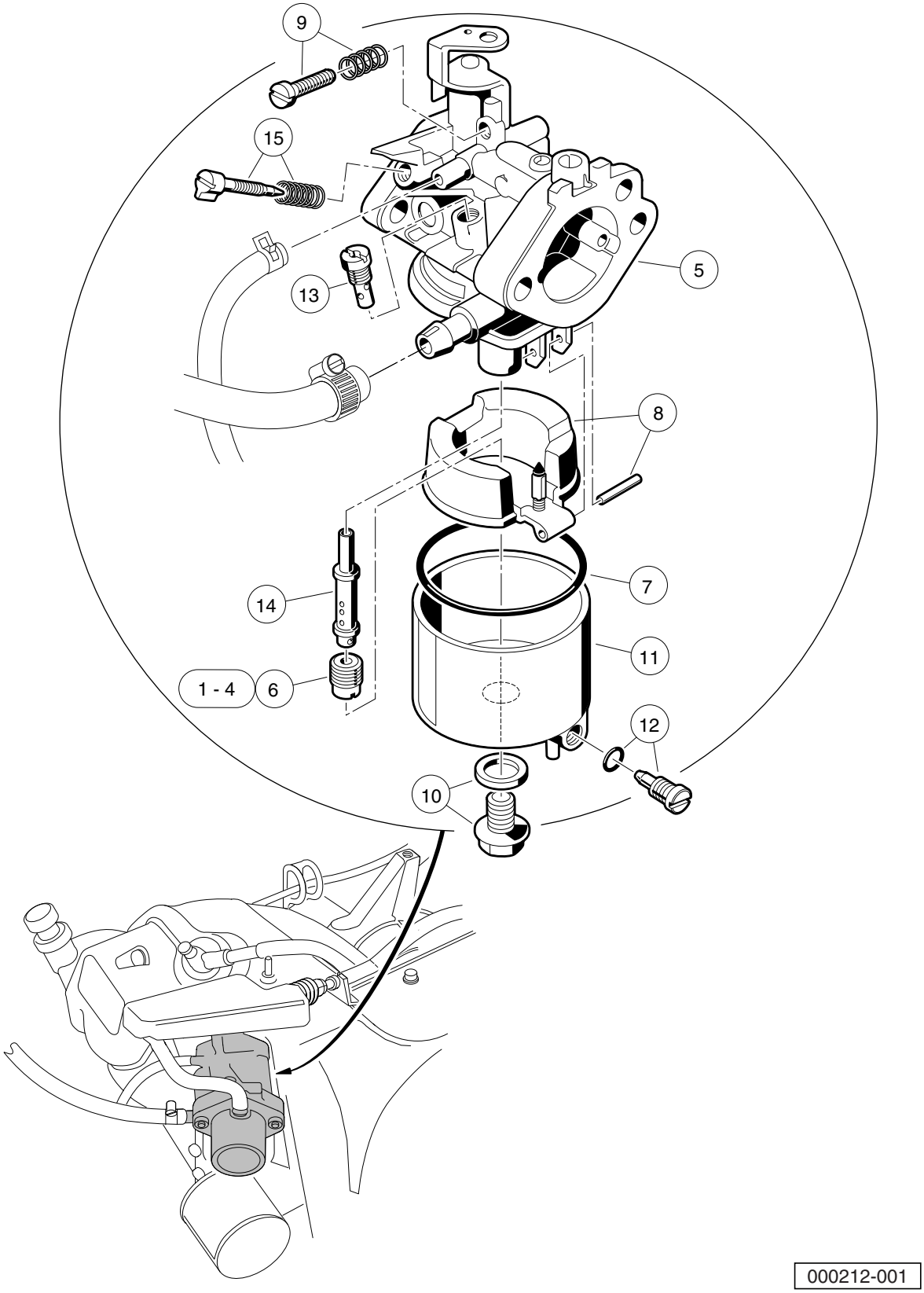
9
15
13
5
8
14
7
11
1 - 4
6
12
10
000212-001

CARBURETOR ASSEMBLY – FE350

ITEM	PART NO.	DESCRIPTION	QTY
		1 2 3 4	
1	101642575	Jet, Altitude, # 75	A/R
2	101642578	Jet, Altitude, # 78	A/R
3	101642580	Jet, Altitude, # 80	A/R
4	101642582	Jet, Altitude, # 82	A/R
5	101905901	Carburetor, FE350D (includes items 6 through 15)	1
6	101642585	Jet, Altitude, # 85	1
7	1016437	Gasket, Carburetor Bowl OHV	1
8	1016486	Float Assembly	1
9	1016501	Screw Assembly	1
10	1016585	Bolt	1
11	1017461	Chamber Assembly, Float (includes item 12)	1
12	1016499	Screw Assembly	1
13	101973101	Jet, #40 Pilot	1
14	101973301	Nozzle, Main	1
15	N/A	Assembly, Pilot Air Screw	1

Note: 101642585 for 0 - 3,000 feet; 101642582 for 3,000 - 5,000 feet; 101642580 for 5,000 - 8,000 feet; 101642578 for 8,000 - 10,000 feet; 101642575 for 10,000 feet and higher.

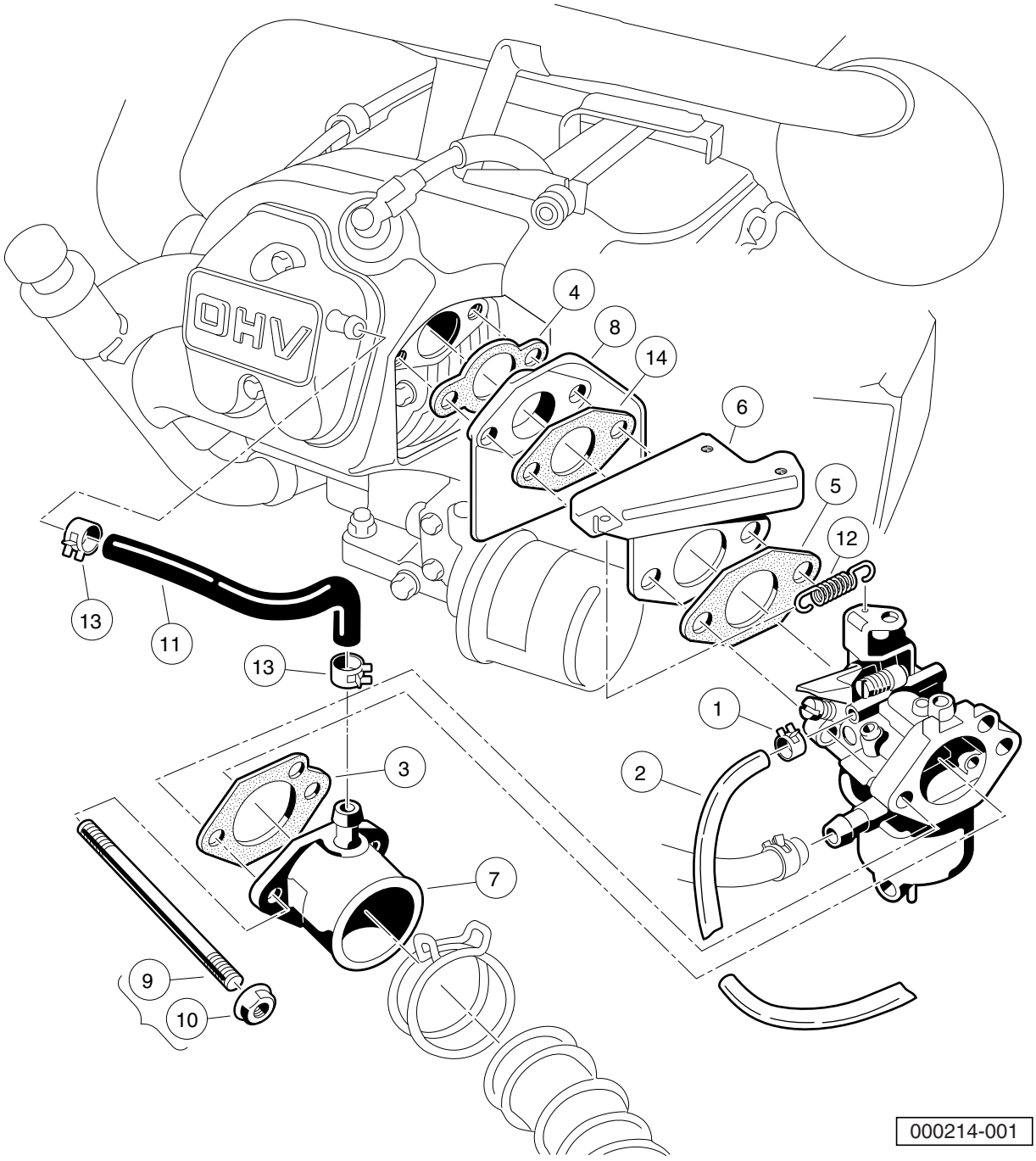
OHV
4
8
14
6
5
12
13
11
13
1
2
3
7
9
10
000214-001

CARBURETOR INSTALLATION – FE350

ITEM	PART NO.	DESCRIPTION	QTY
		1 2 3 4	
1	1013746	Clamp, 0.301 ID Hose	1
2	1015137	Fuel Line (available by the foot)	A/R
3	1016438	Gasket, Carb To Intake Manifold	1
4	1016440	Gasket, Engine to Insulator	1
5	1016441	Gasket, Sprg Brkt To Carb OHV	1
6	1016444	Bracket, Throttle Spring Return	1
7	1016480	Pipe, Intake Manifold	1
8	101648102	Insulator, Carburetor	1
9	101649002	Stud, M6-1.00 Two-Ended	2
10	1016547	Nut	2
11	1016572	Tube, Crankcase Vent	1
12	1016582	Spring, Throttle Return	1
13	1017466	Clamp	2
14	101973401	Gasket, Insulator To Bracket	1

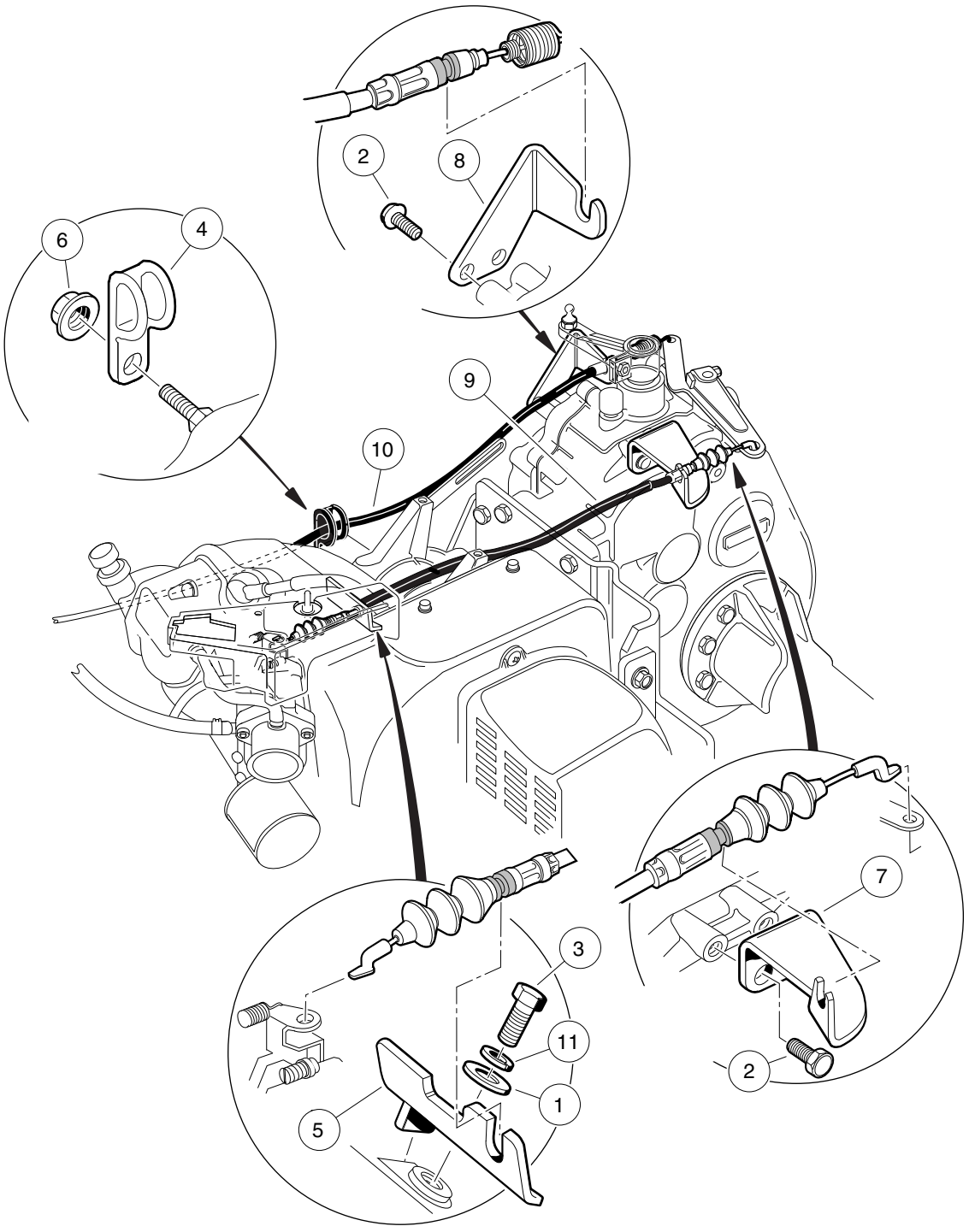

000215-001

GOVERNOR AND ACCELERATOR CABLES

ITEM	PART NO.	DESCRIPTION	QTY
		1 2 3 4	
1	1011697	Washer, 5/16 Flat	1
2	1012285	Screw, 1/4 X 0.625 Hex-Head	4
3	1012830	Screw, M8-125 X 22 Hex-Head	1
4	1013700	Clamp	2
5	101584502	Bracket, Governor Cable Snap-In	1
6	1016546	Nut	2
7	101832202	Bracket, Rear Governor Cable Snap-In	1
8	101832302	Bracket, Rear Accelerator Cable Snap-In	1
9	102336001	Cable, Governor, Snap-In	1
10	102336101	Cable, Accelerator, Snap-In	1
11	7174	Lockwasher, 5/16 Split	1

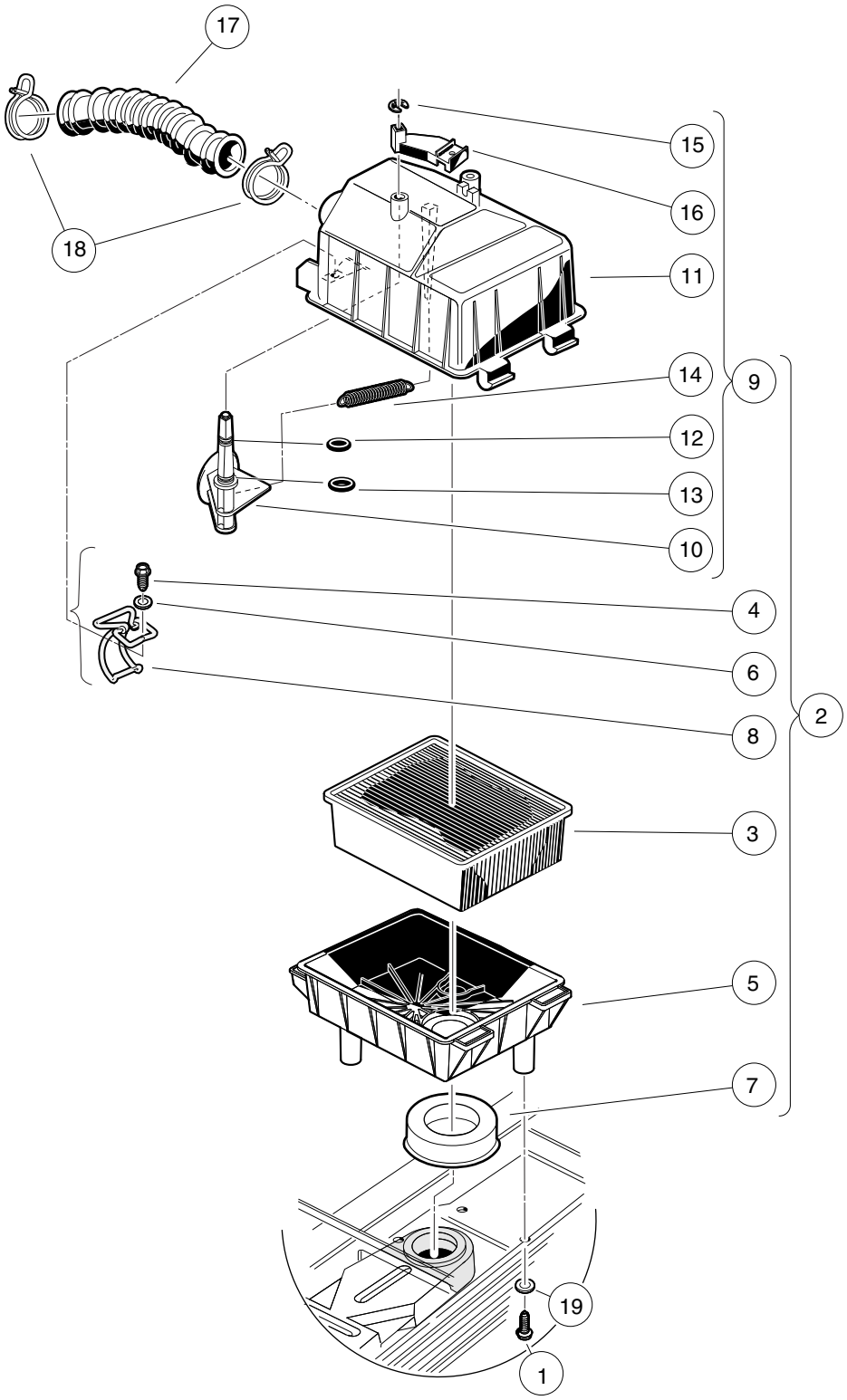
17
15
16
18
11
14
9
12
13
10
4
6
2
8
3
5
7
19
1
000332-001

AIR BOX AND INTAKE HOSE

ITEM	PART NO.	DESCRIPTION	QTY
		1 2 3 4	
1	1015752	Screw, #12-16 X 0.625 Hi-Lo	3
2	101821501	Assembly, Air Box (includes items 3 through 9)	1
3	1015426	Filter, Air	1
4	101804301	Screw, #8 X 0.500, Hex-Head Hi-Lo	2
5	101811901	Bottom, Air Box	1
6	101881701	Washer, #8 Stainless-Steel Flat	2
7	101921501	Seal, Intake	1
8	101925701	Latch, Wireform	2
9	101972801	Top Assy, Air Box (includes items 10 through 16)	1
10	N/A	Valve, Choke	1
11	N/A	Top, Air Box	1
12	N/A	O-Ring, 5/16	1
13	N/A	O-Ring, 3/8	1
14	101812301	Spring, Extension Return	1
15	101813001	Retaining Ring 0.25, Shaft	1
16	101917601	Lever, Choke	1
17	101837101	Hose, Air Intake	1
18	101971301	Clamp, 1.58" ID Hose	2
19	332	Washer, 1/4 Type A Narrow Flat	3

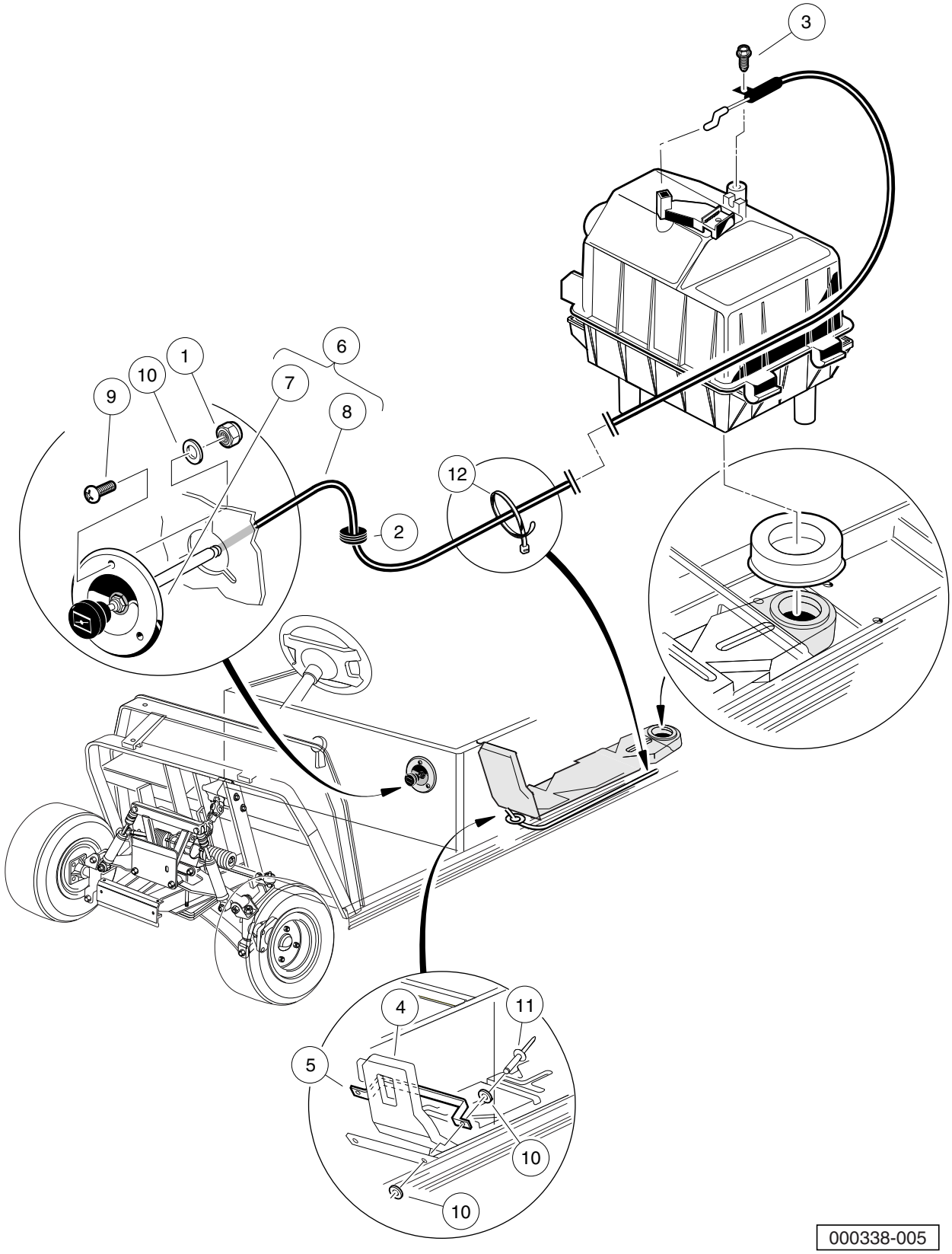
3
1
10
9
6
7
8
12
2
4
11
5
10
10
000338-005

INTAKE SYSTEM – VILLAGER 6

ITEM	PART NO.	DESCRIPTION	QTY
		1 2 3 4	
1	1012438	Locknut, #10-24 Nylon Insert	3
2	1015139	Insulation Grommet	1
3	101804301	Screw, #8 X 0.500, Hex-Head Hi-Lo	1
4	101811301	Duct, Intake	1
5	101825701	Retaining Bracket	1
6	101926802	Cable, Choke (includes items 7 and 8)	1
7	101933701	Bezel, Choke Cable	1
8	N/A	Choke Cable without Bezel, Long	1
9	1631	Screw, #10-24 X 0.75 Phillips Pan-Head	3
10	183	Washer, #10 Type A Flat	7
11	7973	Rivet, 3/16 X .400 Blind	2
12	8639	Tie Wrap, 11" Nylon	2

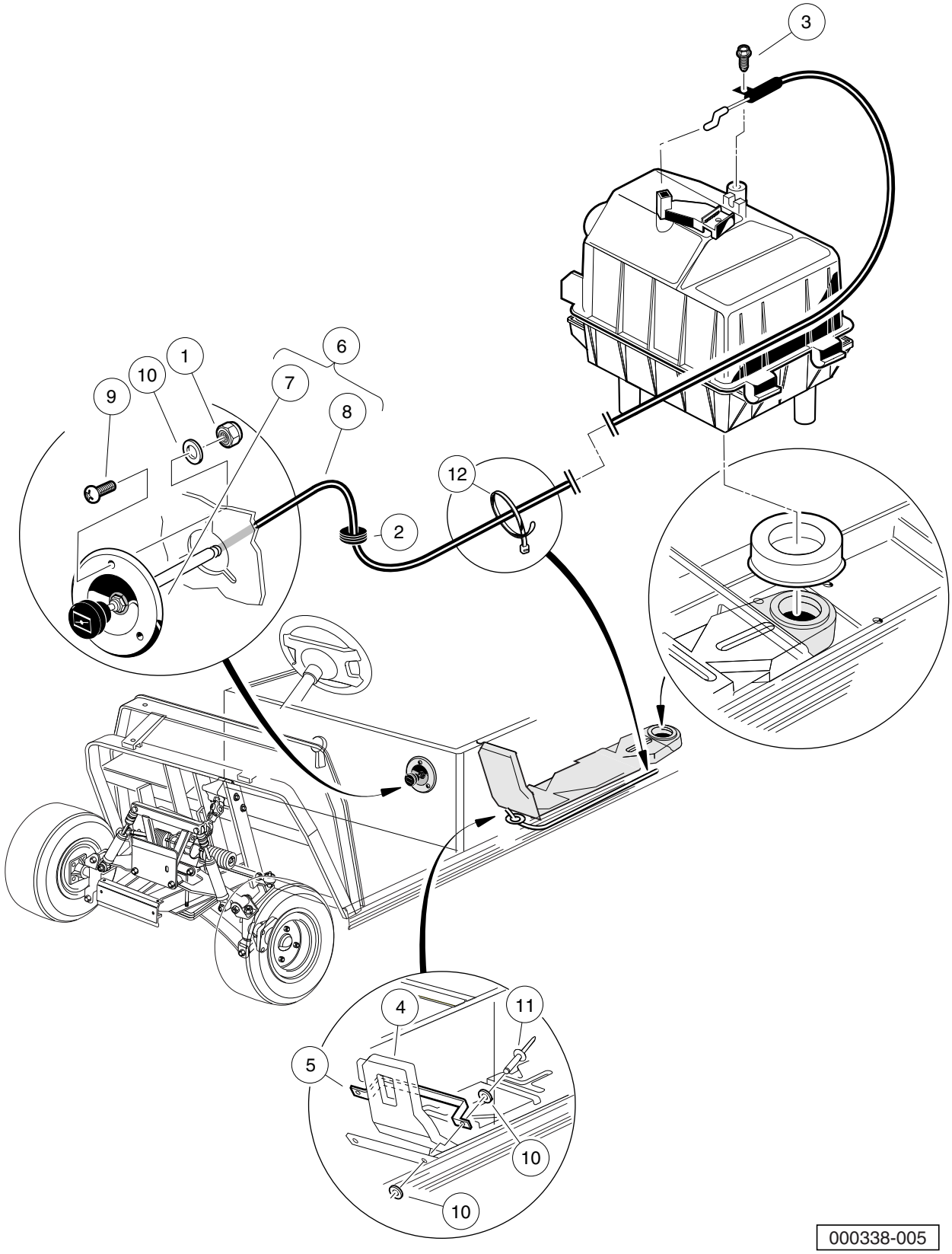
3
1
10
9
6
7
8
12
2
4
11
5
10
10
000338-005

INTAKE SYSTEM – VILLAGER 8

ITEM	PART NO.	DESCRIPTION	QTY
		1 2 3 4	
1	1012438	Locknut, #10-24 Nylon Insert	3
2	1015139	Insulation Grommet	1
3	101804301	Screw, #8 X 0.500, Hex-Head Hi-Lo	1
4	101811301	Duct, Intake	1
5	101825701	Retaining Bracket	1
6	101926803	Cable, Choke (includes items 7 and 8)	1
7	101933701	Bezel, Choke Cable	1
8	N/A	Choke Cable without Bezel, Long	1
9	1631	Screw, #10-24 X 0.75 Phillips Pan-Head	3
10	183	Washer, #10 Type A Flat	7
11	7973	Rivet, 3/16 X .400 Blind	2
12	8639	Tie Wrap, 11" Nylon	2

8

G

EXHAUST SYSTEM

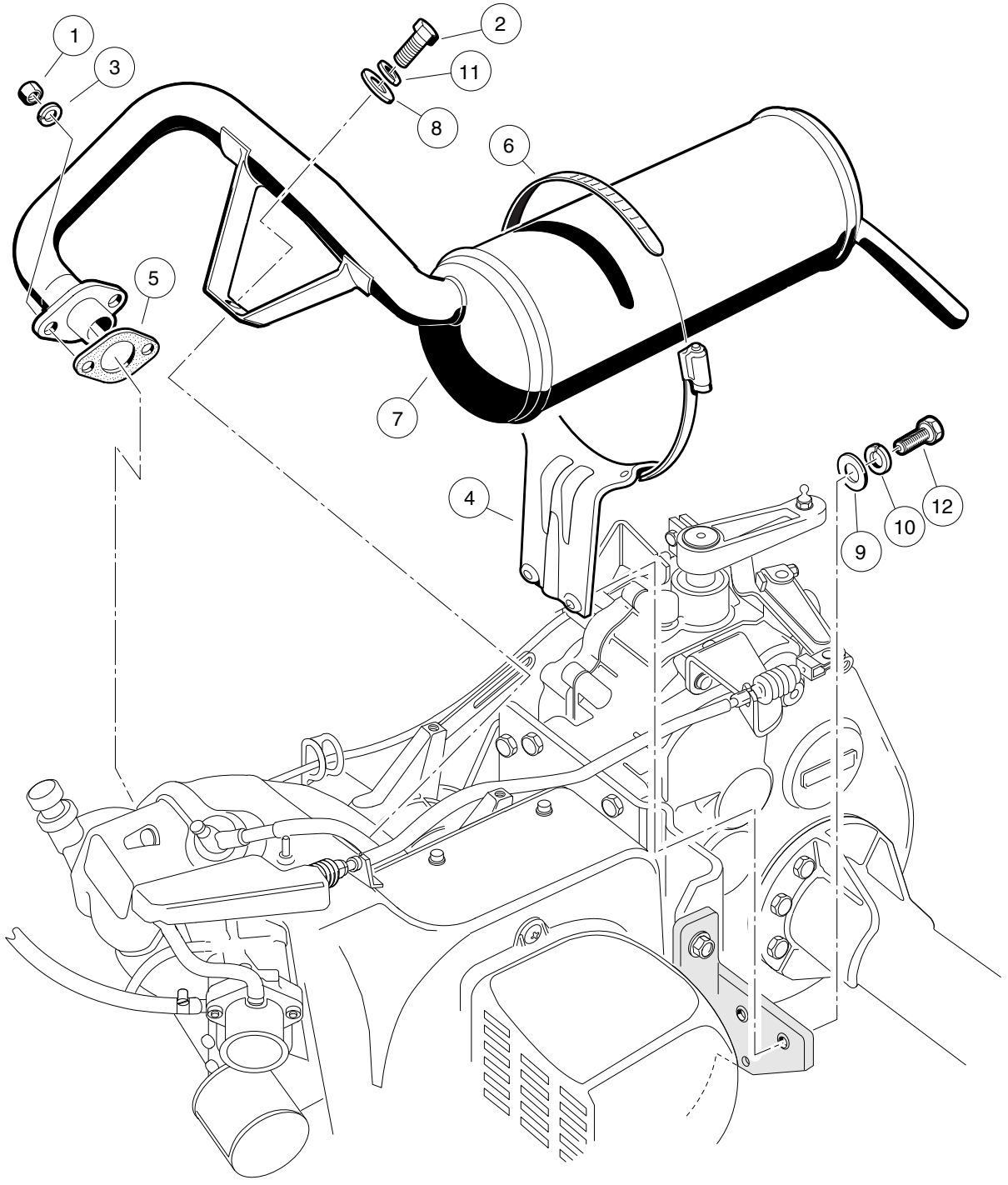

000209-001

EXHAUST SYSTEM – FE350 ENGINE

ITEM	PART NO.	DESCRIPTION	QTY
		1 2 3 4	
1	1012528	Nut, M8-1.25 Hex	2
2	1012830	Screw, M8-125 X 22 Hex-Head	1
3	1013734	Lockwasher, 8mm Split	2
4	1015814	Bracket, Muffler Mounting	1
5	1016904	Gasket, Exhaust	1
6	1017689	Clamp, 5" Muffler Hose	1
7	101859401	Exhaust System, FE350	1
8	1241	Washer, 5/16 Type A Flat	1
9	332	Washer, 1/4 Type A Narrow Flat	2
10	451	Lockwasher, 1/4 Helical Split	2
11	7174	Lockwasher, 5/16 Split	1
12	7847	Screw, 1/4-20 X 0.75 Hex-Head Cap	2

9

G

TORQUE CONVERTER

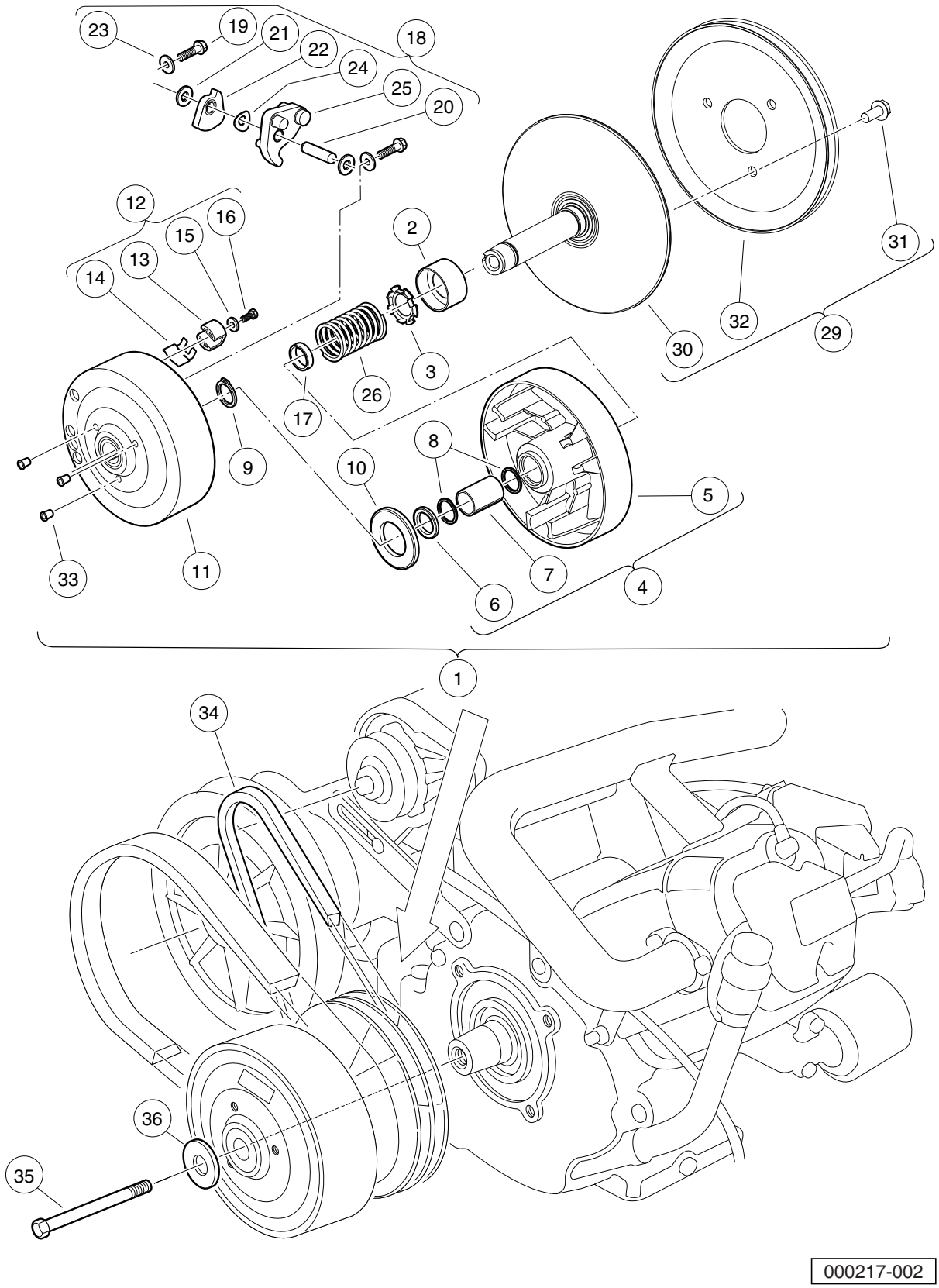
23
19
21
22
18
24
25
20
12
16
15
2
31
13
14
32
29
30
26
3
17
9
10
8
5
33
11
7
4
6
1
34
36
35
000217-002

DRIVE CLUTCH

ITEM	PART NO.	DESCRIPTION	QTY
		1 2 3 4	
1	101833904	Assembly, Drive Clutch (includes items 2 through 33)	1
2	1014049	Bearing, Idler	1
3	1014050	Retainer, Spring	1
4	1014052	Movable-Face Assembly (includes items 5 through 7)	1
5	N/A	Drive Clutch Movable Face	1
6	1014055	Retainer	1
7	N/A	Bushing, Split, Drive Clutch	1
8	1014056	Ring, Spiral Backup	2
9	1014057	Ring, 0.810" Internal Retaining	1
10	1014058	Washer, Thrust	1
11	1014059	Drive Hub Assy, Drive Clutch	1
12	1014453	Kit, Drive Clutch Button (includes items 13 through 16)	1
13	1014062	Driver, Drive Clutch	3
14	1014287	Spring, Drive Button	3
15	183	Washer, #10 Type A Flat	3
16	8450	Screw, #10-24 X 0.50 Hex-Head	3
17	1016289	Spacer, Fixed Face Shaft	1
18	1016801	Kit, Drive Clutch Weight (includes items 19 through 25)	1
19	1014063	Screw, 1/4-20 X 1.00 Hex Head	6
20	N/A	Pin, 0.3752 X 1.50 Dowel	3
21	1014065	Washer, 0.38" ID Delrin Flat	6
22	N/A	Clutch Weight, Secondary	3
23	N/A	Washer	6
24	1016201	Washer, Wave	3
25	N/A	Weight, Primary	3
26	1016901	Spring, Drive Clutch	1
27	101738302	Kit, Fixed Face - Drive (includes items 28 and 29)	1
28	N/A	Desiccant Bag (Not Shown)	1
29	N/A	Fixed Face Drive (includes items 30 through 32)	1
30	N/A	Fixed Face Assembly, Drive Clutch	1
31	1014288	Screw, 5/16-18 X 0.75 Thread-Forming	3
32	N/A	Pulley, Drive Clutch	1
33	N/A	Cap Plug	3
34	101916701	V-Belt	1
35	103345701	Screw 3/8-24x5.5 Hex Loc Ptch	1
36	808	Washer, 3/8 Type B Flat	1

Note: Item 28 not shown.

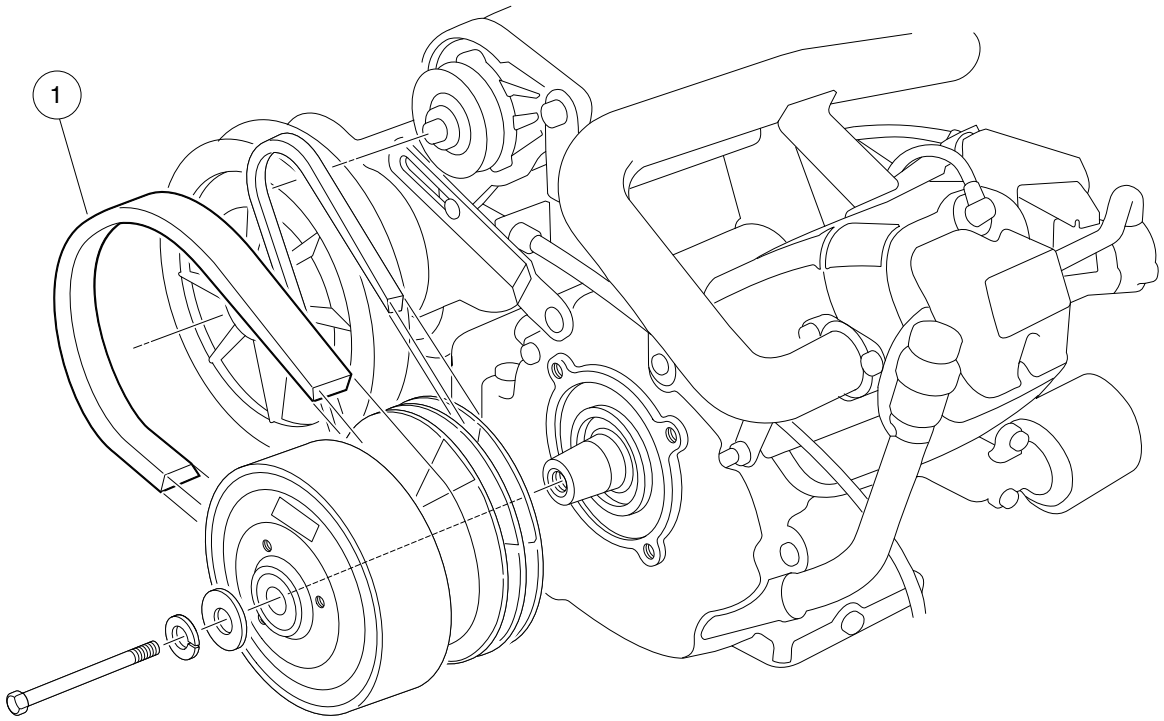

000218-001

DRIVE BELT – FE350

ITEM	PART NO.	DESCRIPTION	QTY
		1 2 3 4	
1	1017188	Belt, Drive (FE350)	1

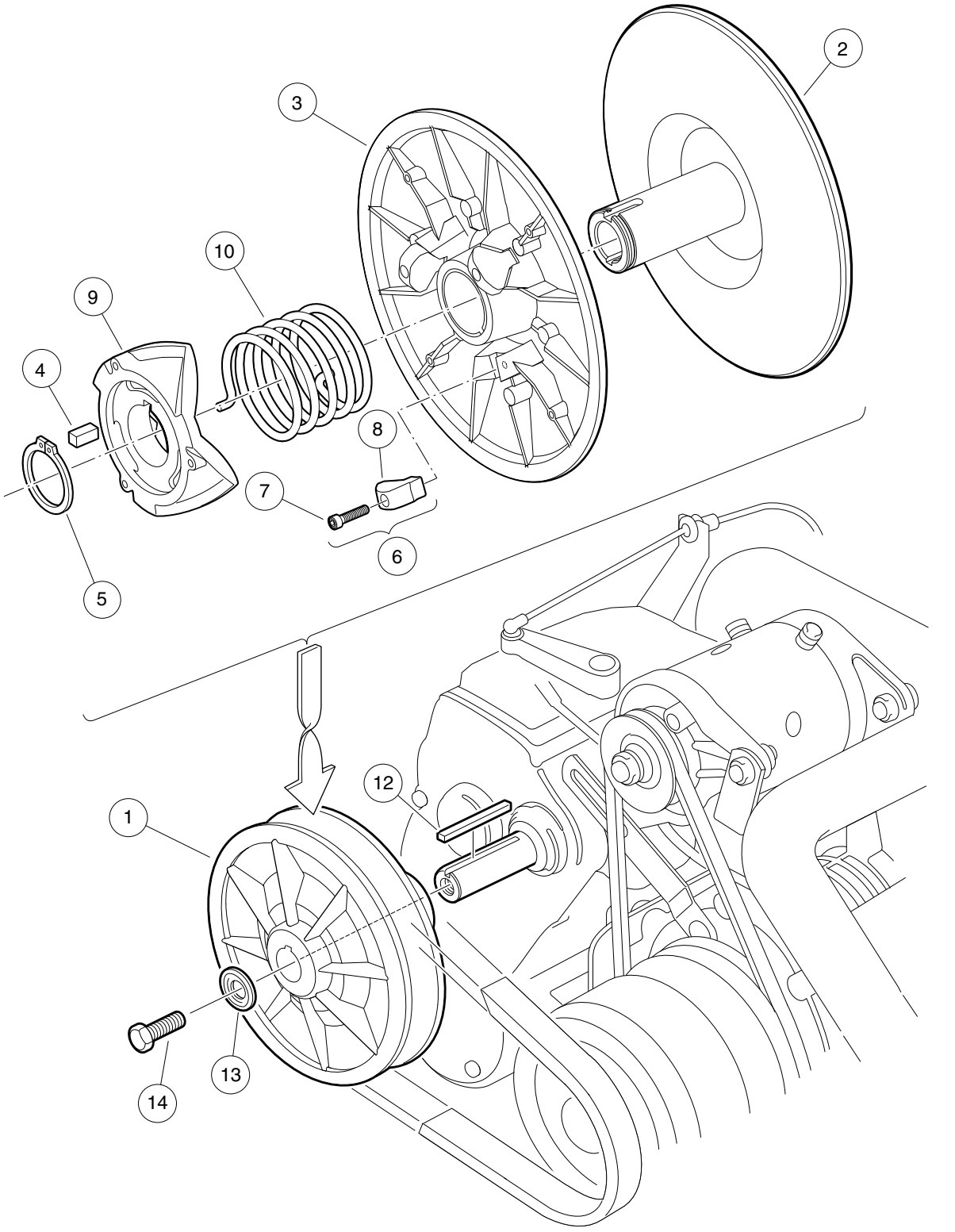
2
3
10
9
4
8
7
6
5
12
1
13
14
000219-001

DRIVEN CLUTCH

ITEM	PART NO.	DESCRIPTION	QTY
		1 2 3 4	
1	101834001	Assembly, Driven Clutch (includes items 2 through 10)	1
2	1014070	Fixed Face Assy, Driven Clutch	1
3	1014072	Movable-Face Assembly with Bushing	1
4	1014078	Key, Driven Clutch	1
5	1014080	Ring, Retaining	1
6	1014454	Kit, Driven Clutch Button (includes items 7 and 8)	1
7	1012836	Screw, #8-32 X 3/4 Socket-Head Cap	3
8	N/A	Button, Drive	3
9	1017686	Cam, Driven Clutch	1
10	101836201	Spring, Driven Clutch, Reversed	1
11	AM10419	Kit, Clutch Repair (includes items 12 through 14)	1
12	101833401	Key, 3/16 Sq X 1.50"	1
13	N/A	Washer, Driven Clutch	1
14	102242101	Screw, 5/16-18 X 3/4 Hex-Head with Patch	1

10

G

UNITIZED TRANSAXLE – GASOLINE VEHICLES

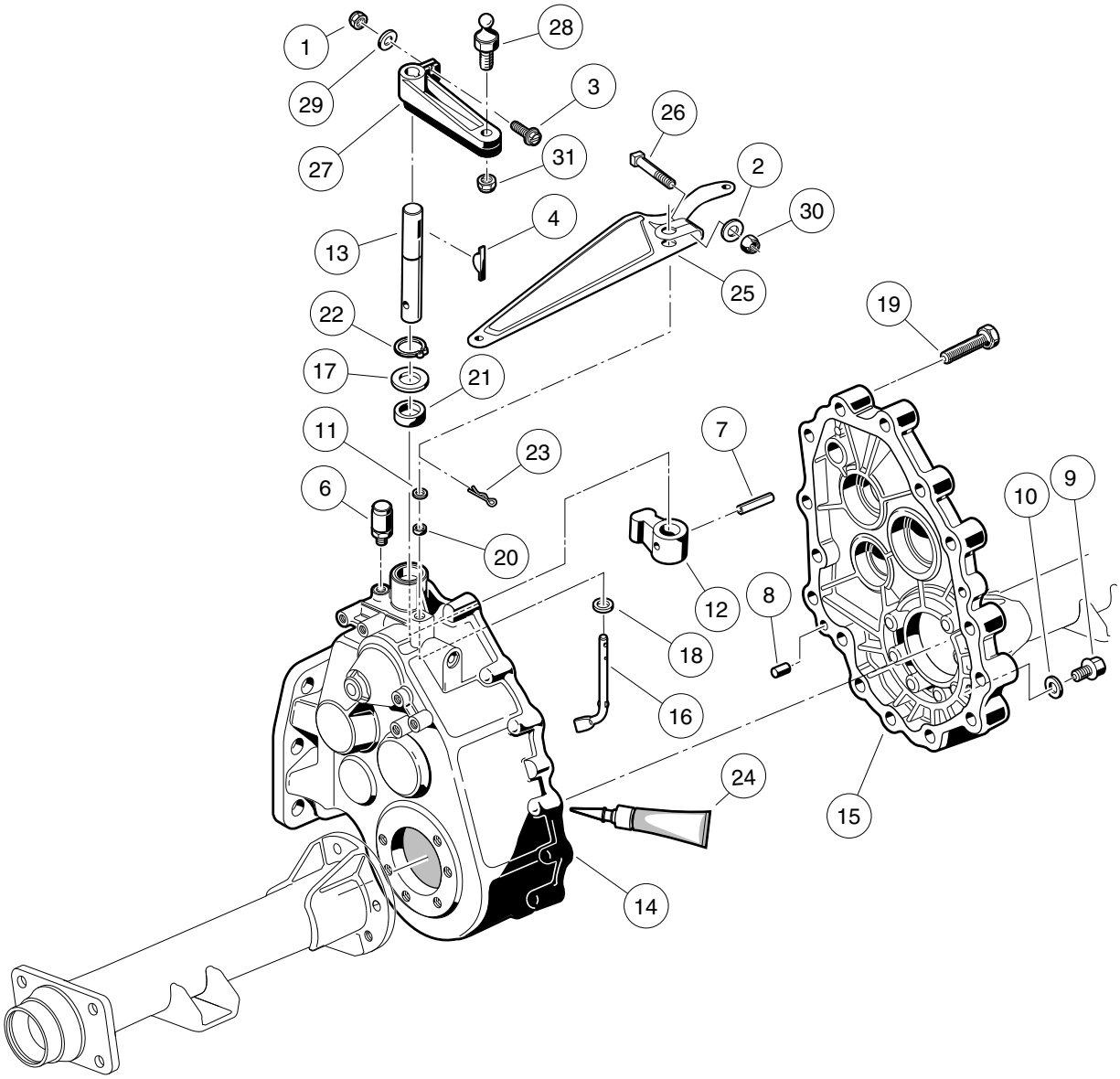
1
28
29
3
26
27
31
2
30
4
13
25
22
19
17
21
11
7
23
6
9
10
20
12
8
18
16
24
15
14

000220-002

UNITIZED TRANSAXLE – GEAR CASES AND BRACKETS

ITEM	PART NO.	DESCRIPTION	QTY
		1 2 3 4	
1	1013061	Locknut, #10-32 Nylon Insert	1
2	1014007	Washer, 1/4 Flat	1
3	1017082	Screw, #10-32 X 0.75, Hex-Head Machine	1
4	1017231	Key, Woodruff	1
5	101833601	Transaxle, 11.77 Ratio (includes items 6 through 24)	1
6	1012711	Breather	1
7	1012752	Roll Pin	1
8	1012896	Pin, Dowel	2
9	1013760	Fill Plug	2
10	1016432	Gasket, Drain Plug	1
11	1016513	Washer, M6 Flat	1
12	101890101	Lever, Change	1
13	101890201	Shaft - Change	1
14	101890501	Gear Case (driver side)	1
15	101890601	Gear Case (passenger side)	1
16	101891301	Arm Pivot	1
17	101892901	Washer	1
18	101893801	Washer	1
19	101926901	Screw, M8-1.25 X 40mm Hex-Head	15
20	101927101	Seal, Oil	1
21	101927201	Seal, Oil	1
22	101927301	Snap Ring	1
23	101928601	Pin, Cotter	1
24	101928701	Liquid Gasket (Transaxle case)	A/R
25	101834801	Arm, Governor	1
26	101886101	Screw, 1/4-20 X 1.00 Square-Head	1
27	102515401	Lever, Transmission Shift	1
28	102526201	Stud, Thread, 1/4-28	1
29	183	Washer, #10 Type A Flat	1
30	8233	Locknut, 1/4-20 Nylon Insert	1
31	8717	Locknut, 1/4-28 Nylon Insert	1

Note: Unitized transaxle component listings span several pages.

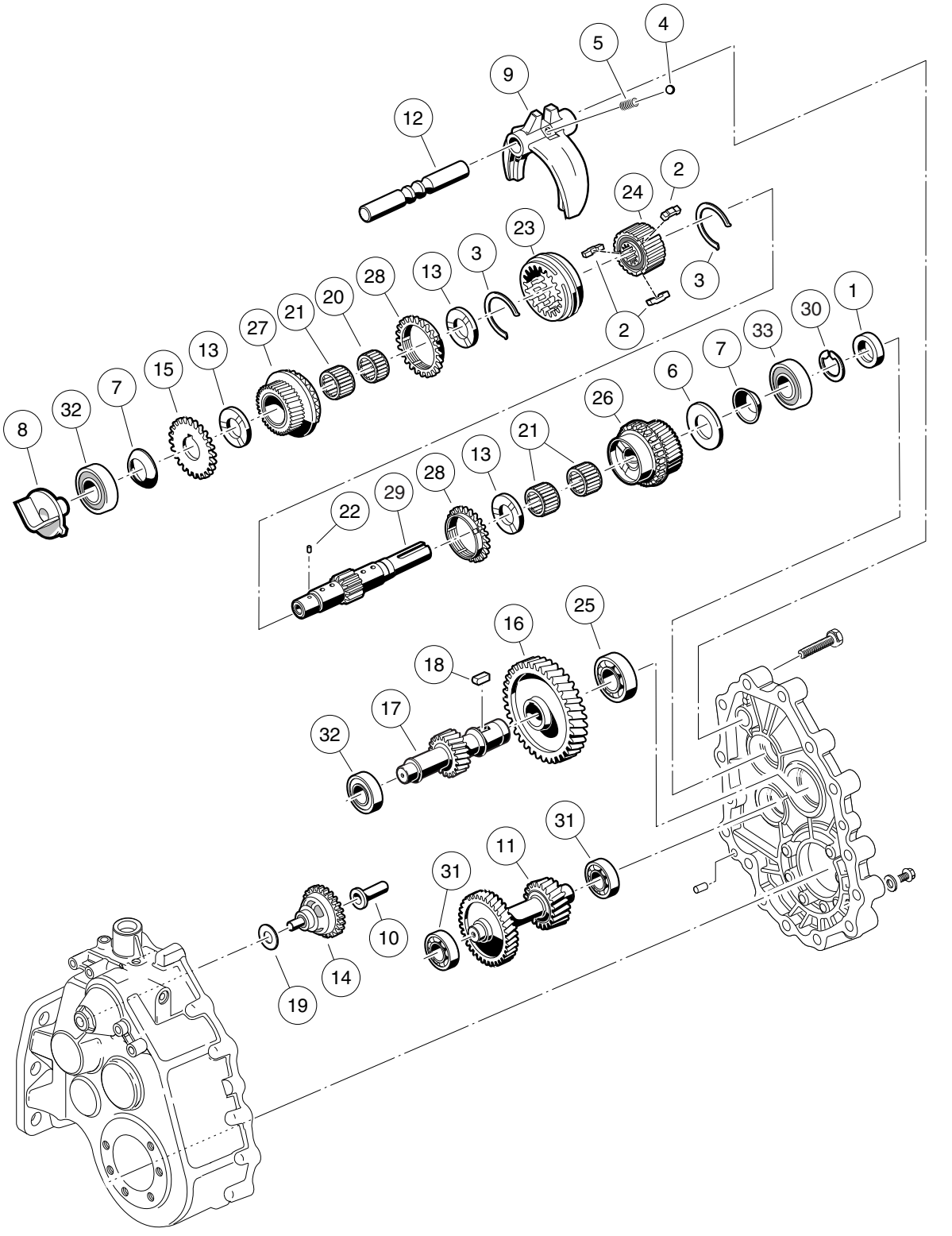
4
5
9
12
2
24
23
3
28
13
20
21
27
15
7
32
8
1
30
33
6
26
22
29
16
25
18
17
31
11
10
14
19
000221-001

TRANSAXLE – TRANSMISSION AND GEAR REDUCTION

ITEM	PART NO.	DESCRIPTION	QTY
		1 2 3 4	
1	1012714	Oil Seal	1
2	1012740	Synchro Insert	3
3	1012741	Synchro Spring	2
4	1012747	Shifter Ball	1
5	1012748	Shifter Spring	1
6	1016337	Washer, Thrust	1
7	1016338	Washer, Spring	2
8	101889401	Guide	1
9	101890001	Fork - Shift	1
10	101891601	Sleeve, Governor	1
11	101891901	Gear, Cluster	1
12	101892001	Rod, Shift	1
13	101892201	Plate, Thrust	3
14	101892301	Governor Assembly	1
15	101892401	Gear, Spur	1
16	101892501	Gear, Helical (61 Tooth)	1
17	101892601	Gear, Helical (17 Tooth)	1
18	101893201	Key Sunk	1
19	101893901	Washer	1
20	101927501	Needle Bearing	1
21	101927601	Needle Bearing	3
22	101927701	Pin, .116" Dia X 0.264 Dowel	1
23	101927901	Sleeve, Synchro	1
24	101928001	Hub, Synchro Clutch	1
25	101928101	Bearing, Ball	1
26	101980801	Gear Assembly, 16-Degree Synchro (25 Tooth)	1
27	101980901	Gear Assembly, 16-Degree Rear Synchro (28 Tooth)	1
28	101981001	Ring, 16-Degree Synchronizer	2
29	102453001	Shaft, Trans, with Circlip	1
30	102453101	Circlip	1
31	7335	Bearing	2
32	AM10080	Bearing, Ball, Sealed	2
33	AM10081	Bearing, Ball, Sealed	1

Note: Items listed on this page are components of the unitized transaxle.

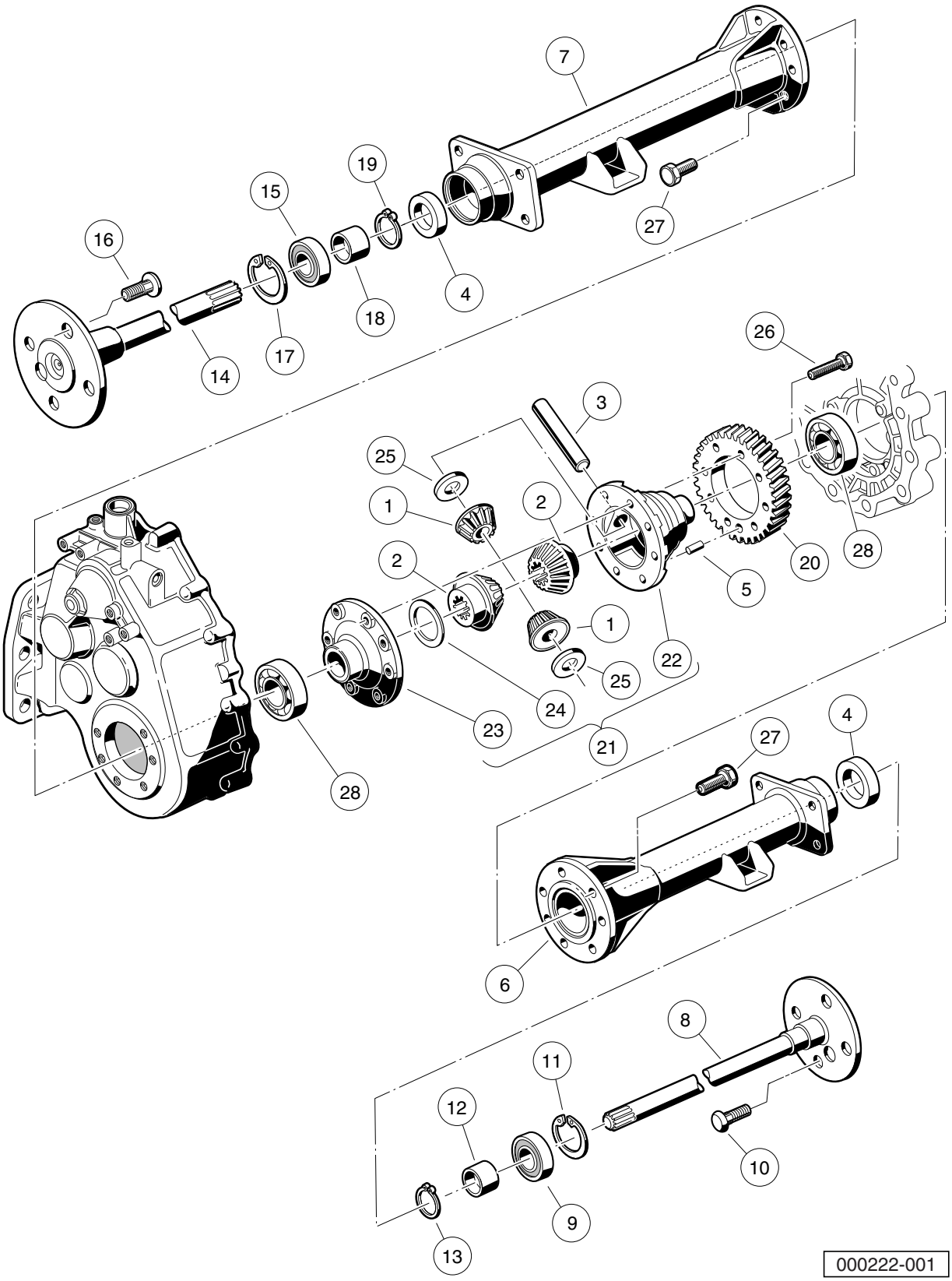
7
19
15
16
4
18
17
14
27
26
3
25
1
2
2
20
28
5
1
22
25
24
23
21
28
4
27
6
8
11
12
10
9
13
000222-001

ITEM	PART NO.	DESCRIPTION	QTY
		1 2 3 4	
1	1013770	Differential Idler Gear	2
2	1013771	Gear, Differential	2
3	1013772	Pin, Differential	1
4	1013794	Axle Shaft Oil Seal	2
5	N/A	Dowel Pin	1
6	101890901	Pipe	1
7	101891001	Pipe	1
8	101891401	Axle Assembly, Passenger Side (includes items 9 through 13)	1
9	1011291	Outer Axle, Tube Bearing	1
10	1013787	Lug Stud	4
11	1013792	Circlip Type C	1
12	1014207	Bushing	1
13	1016672	Retaining Ring	1
14	101891501	Axle Assembly, Driver-Side (includes items 15 through 19)	1
15	1011291	Outer Axle, Tube Bearing	1
16	1013787	Lug Stud	4
17	1013792	Circlip Type C	1
18	1014207	Bushing	1
19	1016672	Retaining Ring	1
20	101892701	Gear, Helical	1
21	101910501	Kit, Differential Gear Case (includes items 22 through 25)	1
22	1013768	Differential Gear Case, Left-Hand	1
23	1013769	Differential Gear Case, Right-Hand	1
24	1013773	Plate, Thrust (Differential Gear)	1
25	1013774	Plate, Thrust (Idler Gear)	2
26	101928301	Screw, M8-1.25 X 35mm Hex Head	8
27	102031901	Bolt, M10 X 1.5 X 30mm	14
28	7330	Inner Axle Tube Bearing	2

Note: Items listed on this page are components of the unitized transaxle.

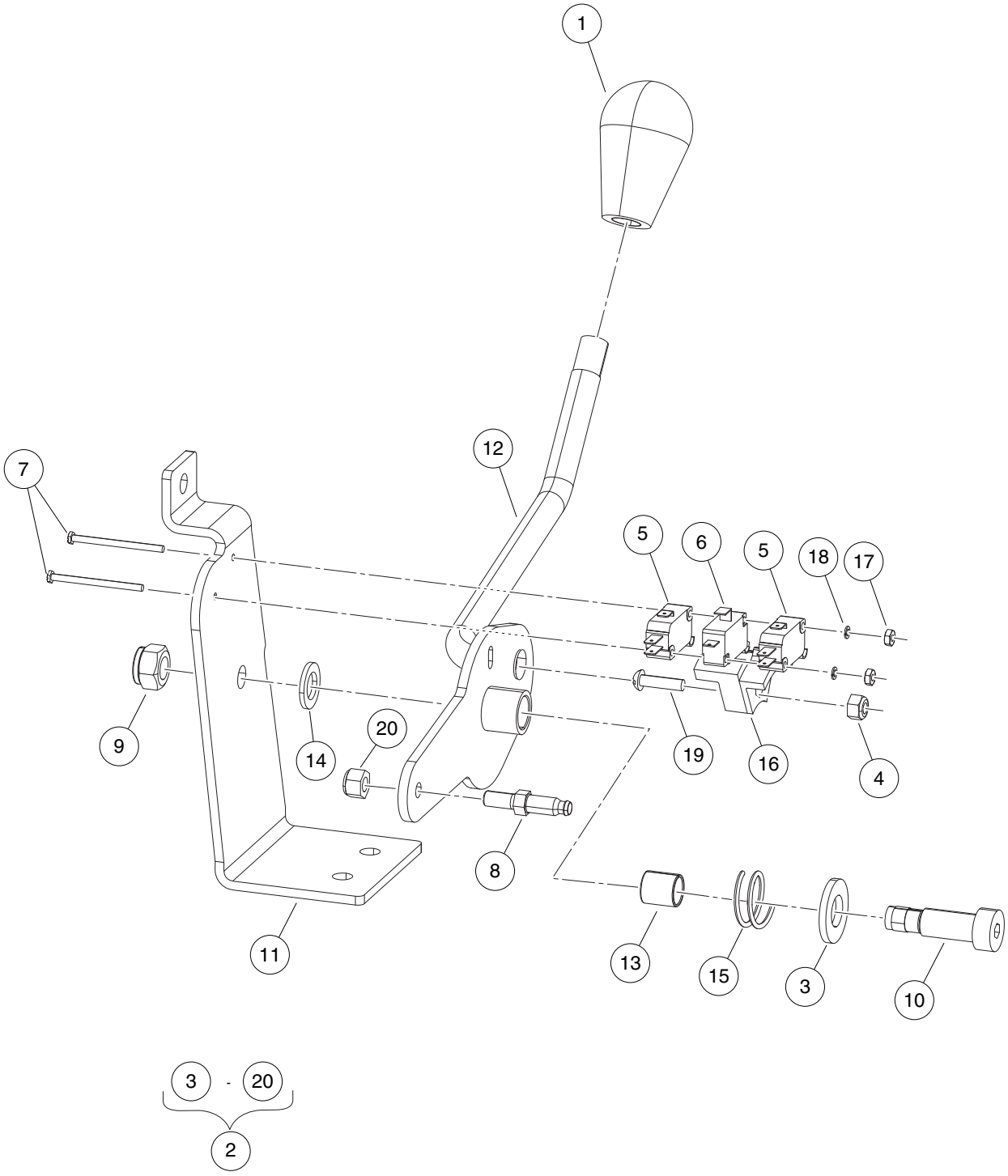
1
12
7
5
6
5
18
17
9
14
20
19
16
4
8
11
13
15
3
10
3 - 20
2
000563-001

FORWARD/REVERSE SHIFTER

ITEM	PART NO.	DESCRIPTION	QTY
		1 2 3 4	
1	102376001	Knob, Fnr	1
2	102969901	Asm, Shifter, FNR (includes items 3 through 20)	1
3	1010028	Washer, 1/2 Type A Flat	1
4	1013061	Locknut, #10-32 Nylon Insert	1
5	1014807	Switch, Limit	2
6	1014808	Switch, Limit	1
7	1015878	Screw, #4-40 Hex Head Machine	2
8	102526201	Stud, Thread, 1/4-28	1
9	102616701	Locknut, M10x1.5 Nylon Insert	1
10	102684602	Shoulder Bolt, M12 X 25.0	1
11	102969401	Bracket, Shifter, FNR	1
12	102969801	Weldment, Shift Lever, FNR	1
13	103173301	Bushing, Greaseless, 12mm Id	1
14	103177401	Washer, Thrust, Shifter, FNR	1
15	103192701	Spring, Comp, .97 Od X.75 L	1
16	103369501	Cam, Limit Switch, Fnr Shifter	1
17	8057	Nut, #4-40 Hex Machine	2
18	8058	Lockwasher, #4 Helical Split	2
19	8104	Screw, #10-32 X .75 Rd Hd Mach	1
20	8717	Locknut, 1/4-28 Nylon Insert	1

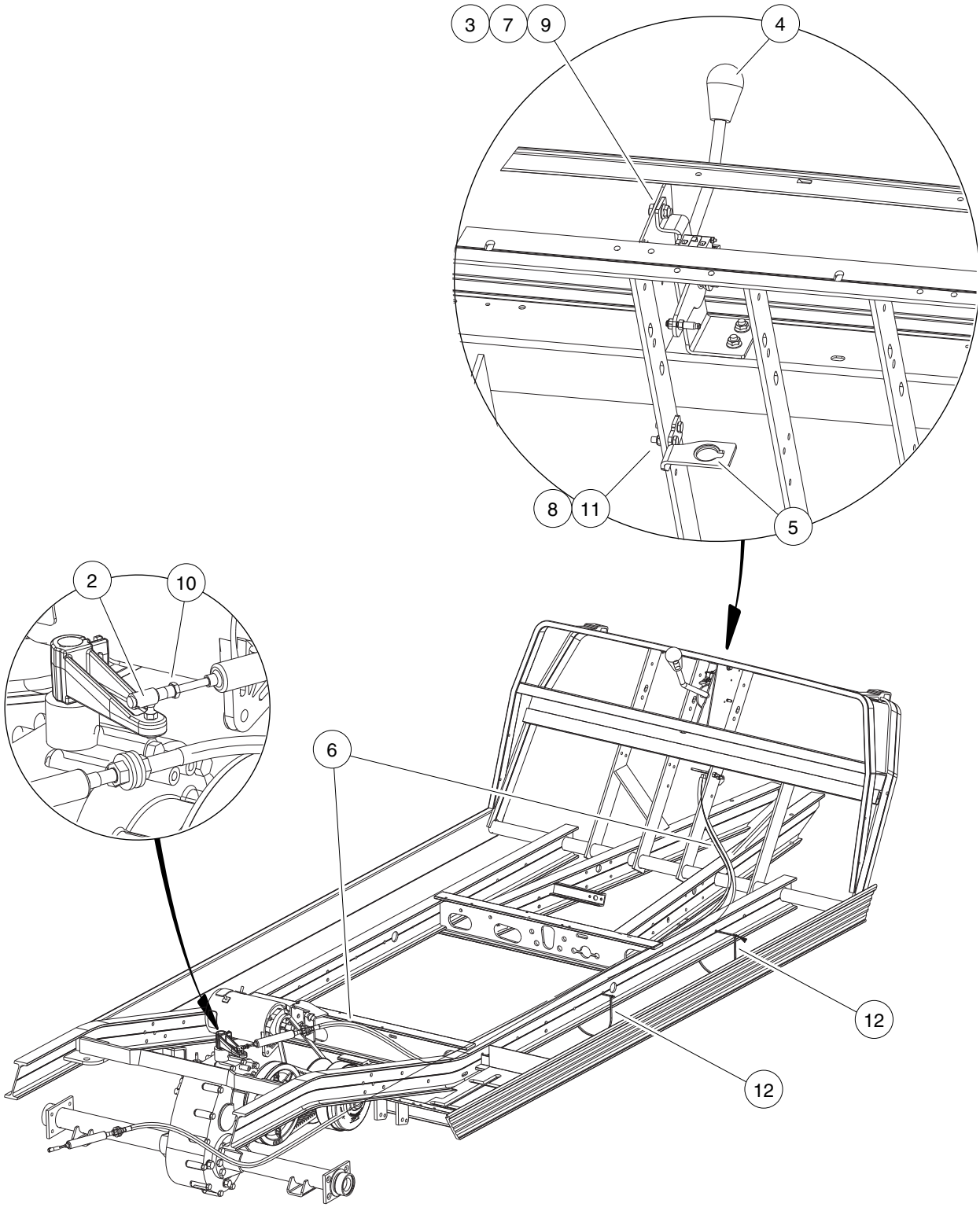
3
7
9
4
8
11
5
2
10
6
12
12
000573-003

FORWARD/REVERSE SHIFTER CABLE – VILLAGER 6

ITEM	PART NO.	DESCRIPTION	QTY
		1 2 3 4	
1	N/A	Installation, Shifter, FNR (includes items 2 through 12)	1
2	1012333	Joint, #10-32 Ball	1
3	101963401	Locknut, 5/16-18 Hex Flange	3
4	102376001	Knob, Fnr	1
5	103295101	Brkt, Spt, Cable End, Fnr	1
6	103295203	Cable, Transmission, 2385mm	1
7	1241	Washer, 5/16 Type A Flat	3
8	304	Screw, 1/4-20 X 1.0 Hex-Head Cap	2
9	7173	Screw, 5/16-18 X 0.75 Hex-Head Cap	3
10	7893	Nut, #10-32 Hex	1
11	8233	Locknut, 1/4-20 Nylon Insert	2
12	8639	Tie Wrap, 11" Nylon	2

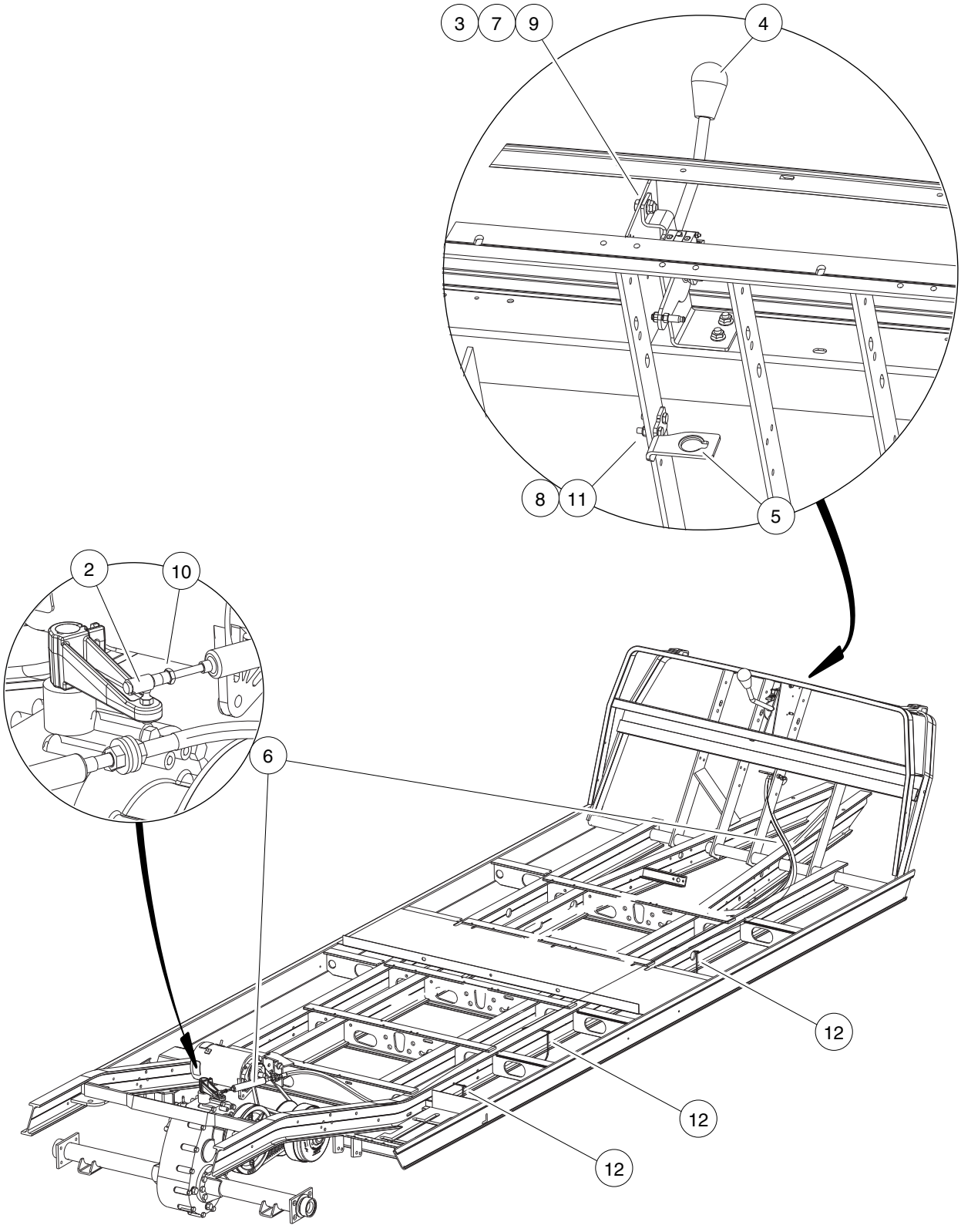
3
7
9
4
8
11
5
2
10
6
12
12
12
000573-004

FORWARD/REVERSE SHIFTER CABLE – VILLAGER 8

ITEM	PART NO.	DESCRIPTION	QTY
		1 2 3 4	
1	N/A	Installation, Shifter, FNR (includes items 2 through 12)	1
2	1012333	Joint, #10-32 Ball	1
3	101963401	Locknut, 5/16-18 Hex Flange	3
4	102376001	Knob, Fnr	1
5	103295101	Brkt, Spt, Cable End, Fnr	1
6	103295204	Cable, Trans, Ball End, 3225mm	1
7	1241	Washer, 5/16 Type A Flat	3
8	304	Screw, 1/4-20 X 1.0 Hex-Head Cap	2
9	7173	Screw, 5/16-18 X 0.75 Hex-Head Cap	3
10	7893	Nut, #10-32 Hex	1
11	8233	Locknut, 1/4-20 Nylon Insert	2
12	8639	Tie Wrap, 11" Nylon	3

ELECTRICAL SYSTEM – ELECTRIC VEHICLES

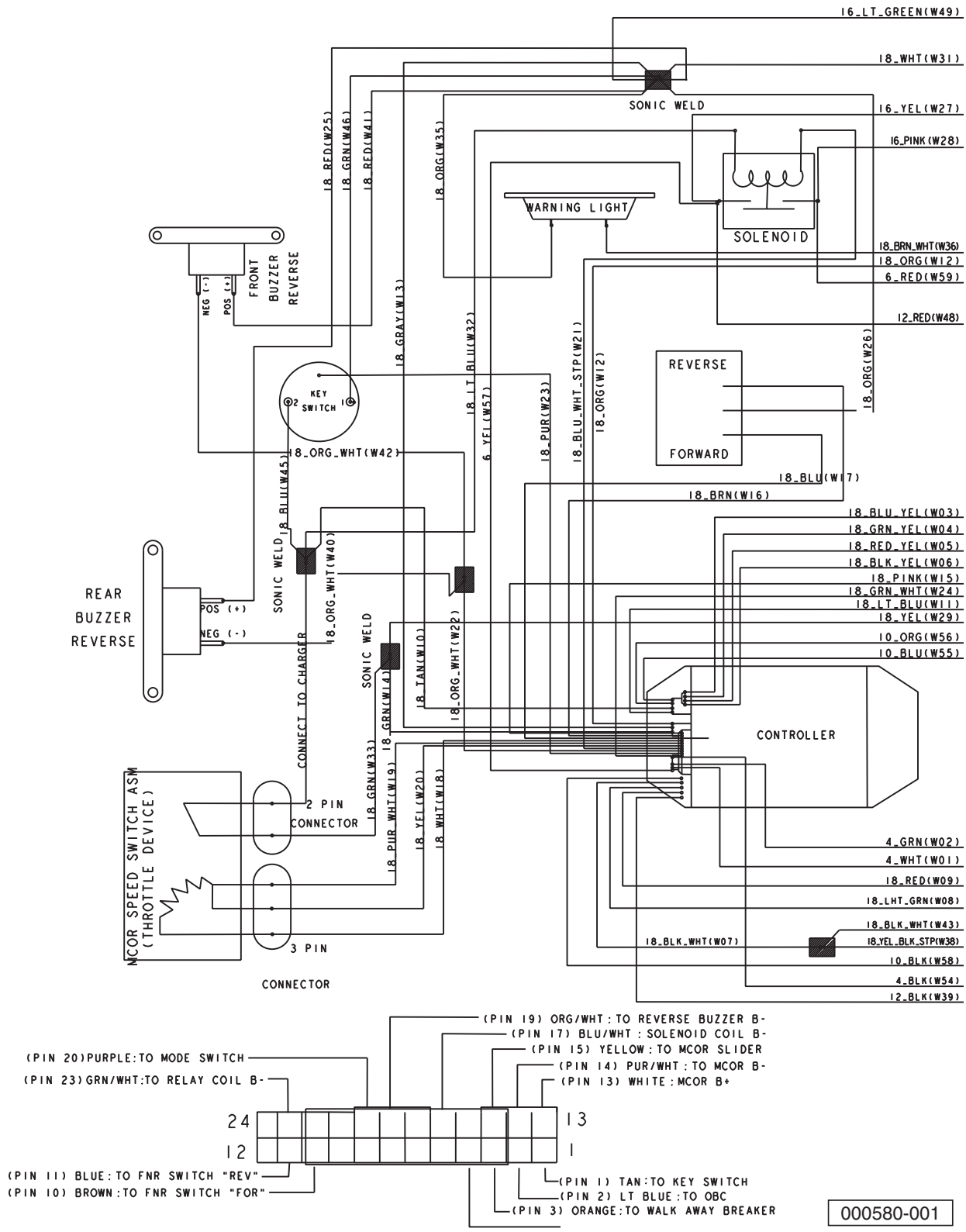
16_LT_GREEN(W49)
18_WHT(W31)
SONIC WELD
16_YEL(W27)
16_PINK(W28)
18_RED(W25)
18_GRN(W46)
18_RED(W41)
18_ORG(W35)
WARNING LIGHT
SOLENOID
18_BRN_WHT(W36)
18_ORG(W12)
6_RED(W59)
12_RED(W48)
FRONT BUZZER REVERSE
NEG (-)
POS (+)
18_GRAY(W13)
18_LT_BLU(W32)
6_YEL(W57)
18_PUR(W23)
18_BLU_WHT_STP(W21)
18_ORG(W12)
REVERSE
FORWARD
18_ORG(W26)
KEY SWITCH
18_ORG_WHT(W42)
18_BLU(W45)
18_BLU(W17)
18_BRN(W16)
18_BLU_YEL(W03)
18_GRN_YEL(W04)
18_RED_YEL(W05)
18_BLK_YEL(W06)
18_PINK(W15)
18_GRN_WHT(W24)
18_LT_BLU(W11)
18_YEL(W29)
10_ORG(W56)
10_BLU(W55)
REAR BUZZER REVERSE
POS (+)
NEG (-)
SONIC WELD
18_ORG_WHT(W40)
SONIC WELD
18_TAN(W10)
18_ORG_WHT(W22)
CONNECT TO CHARGER
18_GRN(W14)
CONTROLLER
18_GRN(W33)
2 PIN CONNECTOR
MCOR SPEED SWITCH ASM (THROTTLE DEVICE)
18_PUR_WHT(W19)
18_YEL(W20)
18_WHT(W18)
4_GRN(W02)
4_WHT(W01)
18_RED(W09)
18_LHT_GRN(W08)
18_BLK_WHT(W43)
18_BLK_WHT(W07)
18_YEL_BLK_STP(W38)
10_BLK(W58)
4_BLK(W54)
12_BLK(W39)
3 PIN CONNECTOR
(PIN 19) ORG/WHT : TO REVERSE BUZZER B-
(PIN 17) BLU/WHT : SOLENOID COIL B-
(PIN 15) YELLOW : TO MCOR SLIDER
(PIN 14) PUR/WHT : TO MCOR B-
(PIN 13) WHITE : MCOR B+
(PIN 20)PURPLE:TO MODE SWITCH
(PIN 23)GRN/WHT:TO RELAY COIL B-
24
12
13
1
(PIN 11) BLUE : TO FNR SWITCH "REV"
(PIN 10) BROWN : TO FNR SWITCH "FOR"
(PIN 1) TAN : TO KEY SWITCH
(PIN 2) LT BLUE : TO OBC
(PIN 3) ORANGE : TO WALK AWAY BREAKER
000580-001

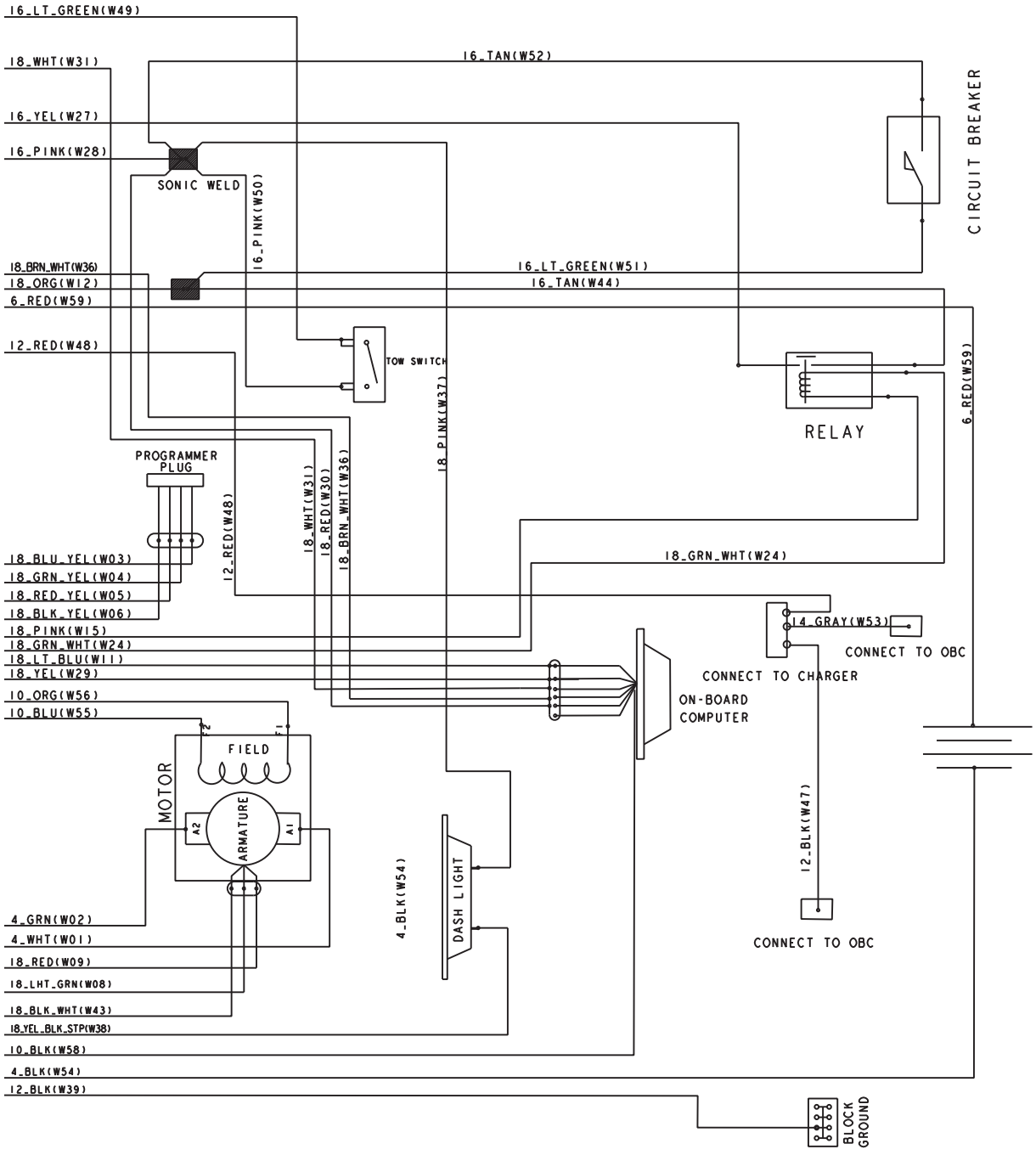
16_LT_GREEN(W49)
18_WHT(W31)
16_YEL(W27)
16_PINK(W28)
SONIC WELD
16_PINK(W50)
16_TAN(W52)
CIRCUIT BREAKER
18_BRN_WHT(W36)
18_ORG(W12)
6_RED(W59)
16_LT_GREEN(W51)
16_TAN(W44)
12_RED(W48)
TOW SWITCH
18_PINK(W37)
RELAY
6_RED(W59)
PROGRAMMER PLUG
12_RED(W48)
18_WHT(W31)
18_RED(W30)
18_BRN_WHT(W36)
18_GRN_WHT(W24)
18_BLU_YEL(W03)
18_GRN_YEL(W04)
18_RED_YEL(W05)
18_BLK_YEL(W06)
18_PINK(W15)
18_GRN_WHT(W24)
18_LT_BLU(W11)
18_YEL(W29)
14_GRAY(W53)
CONNECT TO OBC
CONNECT TO CHARGER
ON-BOARD COMPUTER
10_ORG(W56)
10_BLU(W55)
F2
F1
FIELD
MOTOR
ARMATURE
A2
A1
4_BLK(W54)
DASH LIGHT
12_BLK(W47)
CONNECT TO OBC
4_GRN(W02)
4_WHT(W01)
18_RED(W09)
18_LHT_GRN(W08)
18_BLK_WHT(W43)
18_YEL_BLK_STP(W38)
10_BLK(W58)
4_BLK(W54)
12_BLK(W39)
BLOCK GROUND

000580-001

12

E

See previous two pages for illustration.

ITEM	PART NO.	DESCRIPTION	QTY
		1 2 3 4	
1	N/A	Shaft Governor Gear	1
2	102845501	Harness, Power, Stretch IQ Plus (includes items 3 through 9)	1
3	N/A	Asm, #4 Grn Wire, 89"	1
4	N/A	Asm, #4 Wht Wire, 88.5"	1
5	N/A	Asm, #10 Org Wire, 89.5"	1
6	N/A	Asm, #10 Blu Wire, 95.5"	1
7	N/A	Asm, #4 Red Wire, 67.5"	1
8	N/A	Asm, #4 Blk Wire, 57.5"	1
9	8639	Tie Wrap, 11" Nylon	6
10	102938301	Chrgr Harness, Iq Plus, Shelf	1
11	103222001	Asm, Wire Harness, Stretch, Electric	1

Note: Item 1 and 10 not shown.

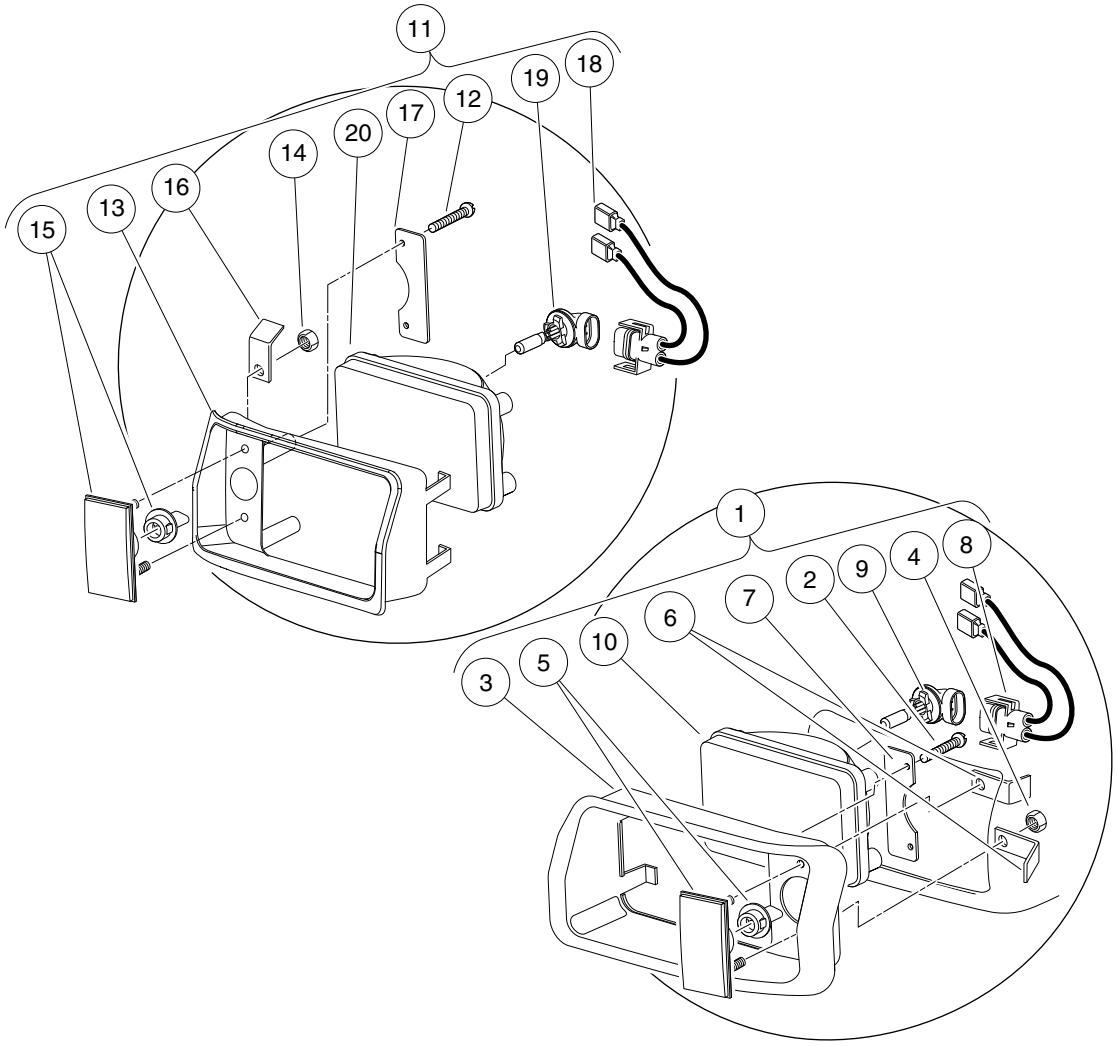

000073-001

ITEM	PART NO.	DESCRIPTION	QTY
		1 2 3 4	
1	101988001	Headlight Assembly, Driver-Side Single Beam (includes items 2 through 10)	1
2	1013461	Screw, #10-16 Hex-Head Hi-Lo	2
3	1016880	Headlight Bezel, Left	1
4	1017	Nut, #10-24 Stainless-Steel Hex Machine	2
5	1017062	Turn Signal Lens Assy	1
6	1017064	Mounting Bracket	2
7	1017065	Retainer, Headlight	1
8	101987901	Connector Harness Assembly, Headlight	1
9	101988101	Bulb, Headlight	1
10	101988201	Lens, Headlight	1
11	101988002	Headlight Assy, Passenger-Side Single Beam (includes items 12 through 20)	1
12	1013461	Screw, #10-16 Hex-Head Hi-Lo	2
13	1016879	Headlight Bezel, Right	1
14	1017	Nut, #10-24 Stainless-Steel Hex Machine	2
15	1017062	Turn Signal Lens Assy	1
16	1017064	Mounting Bracket	2
17	1017065	Retainer, Headlight	1
18	101987901	Connector Harness Assembly, Headlight	1
19	101988101	Bulb, Headlight	1
20	101988201	Lens, Headlight	1

Villager 8 IQ Plus Vehicle

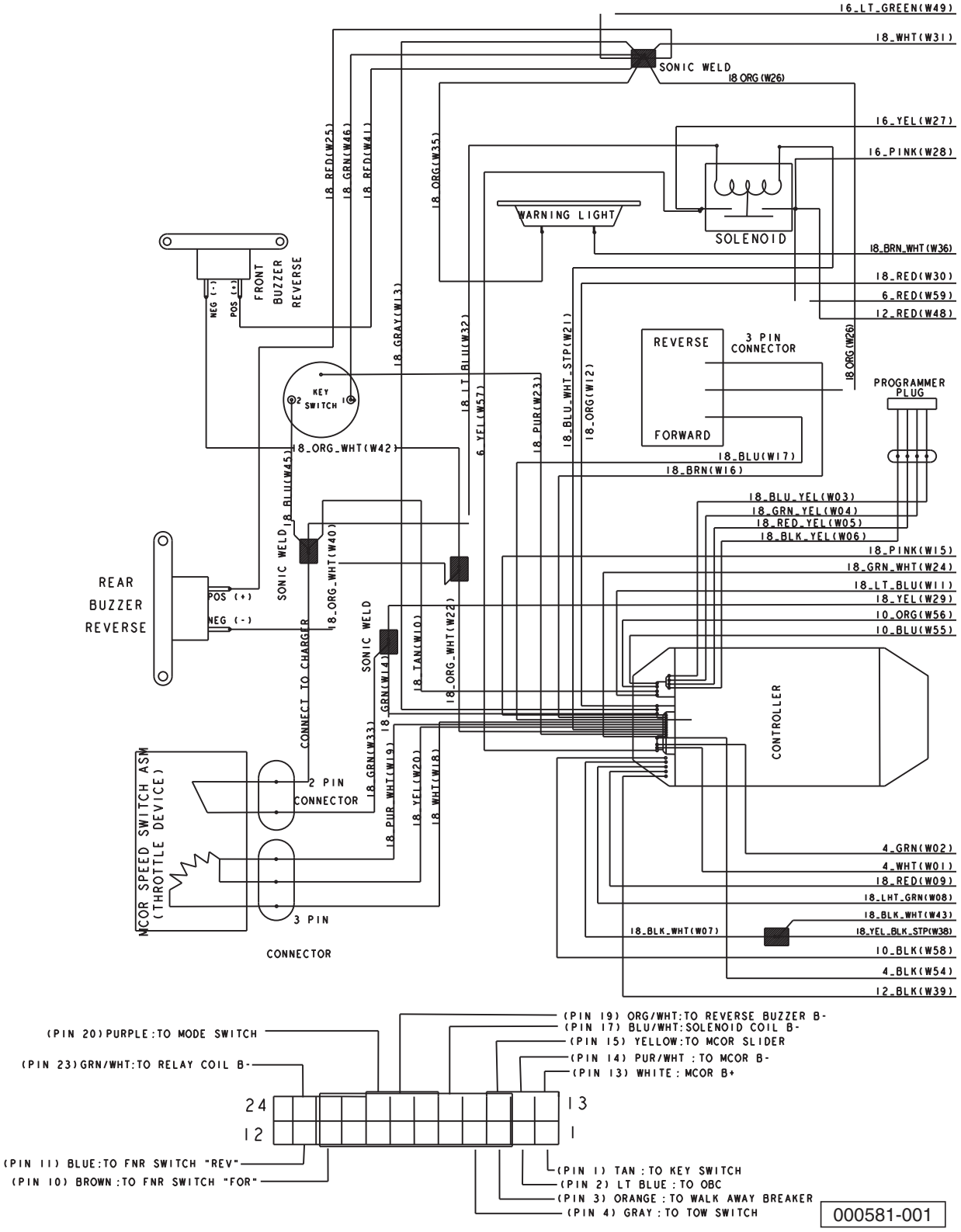

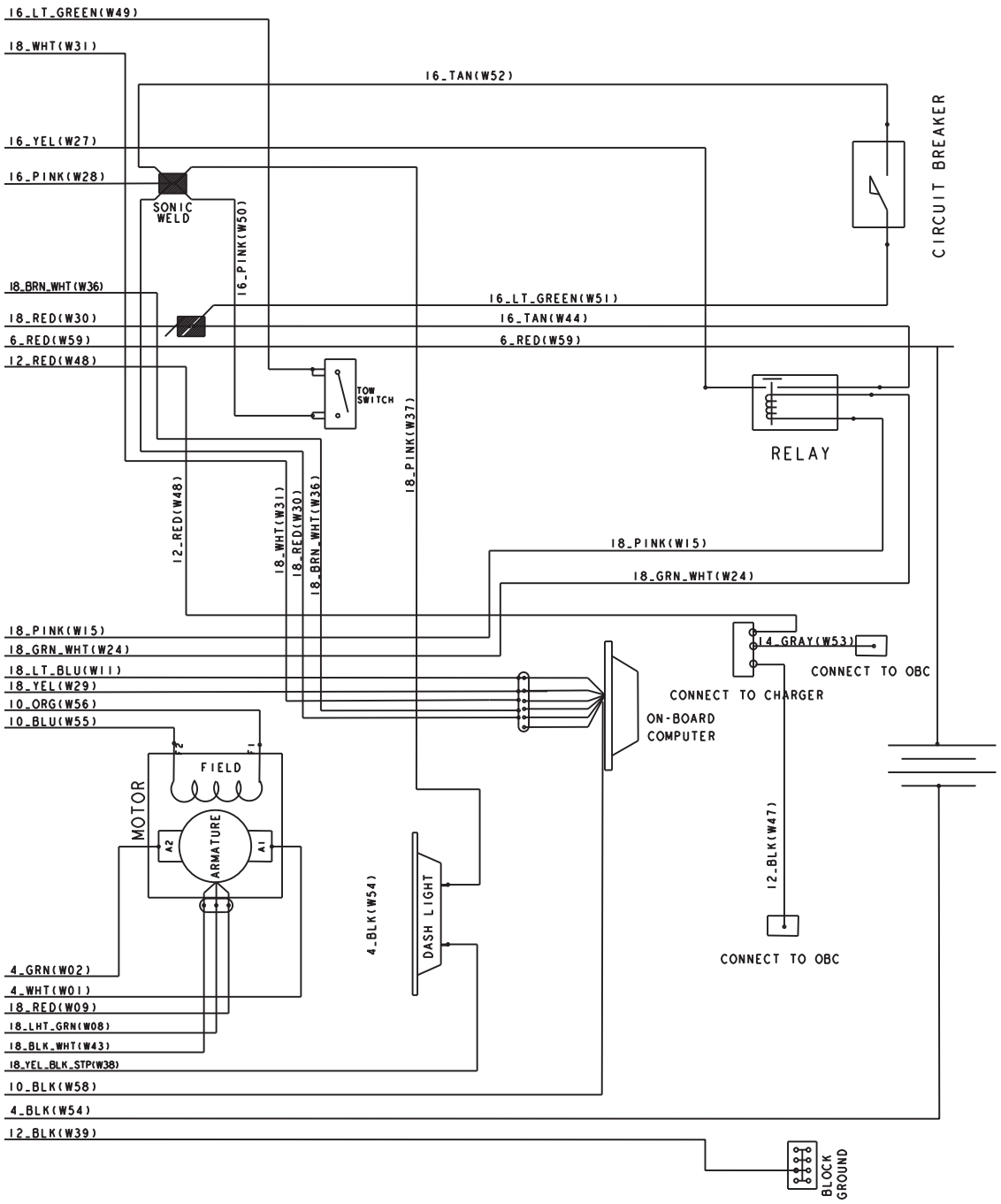
16_LT_GREEN(W49)
18_WHT(W31)
16_TAN(W52)
16_YEL(W27)
16_PINK(W28)
SONIC WELD
16_PINK(W50)
CIRCUIT BREAKER
18_BRN_WHT(W36)
16_LT_GREEN(W51)
18_RED(W30)
16_TAN(W44)
6_RED(W59)
6_RED(W59)
12_RED(W48)
TOW SWITCH
18_PINK(W37)
RELAY
12_RED(W48)
18_WHT(W31)
18_RED(W30)
18_BRN_WHT(W36)
18_PINK(W15)
18_GRN_WHT(W24)
18_PINK(W15)
18_GRN_WHT(W24)
18_LT_BLU(W11)
18_YEL(W29)
10_ORG(W56)
10_BLU(W55)
14_GRAY(W53)
CONNECT TO OBC
CONNECT TO CHARGER
ON-BOARD COMPUTER
FIELD
MOTOR
ARMATURE
A2
A1
4_BLK(W54)
DASH LIGHT
12_BLK(W47)
CONNECT TO OBC
4_GRN(W02)
4_WHT(W01)
18_RED(W09)
18_LHT_GRN(W08)
18_BLK_WHT(W43)
18_YEL_BLK_STP(W38)
10_BLK(W58)
4_BLK(W54)
12_BLK(W39)
BLOCK GROUND

000581-001

12

E

See previous two pages for illustration.

ITEM	PART NO.	DESCRIPTION	QTY
		1 2 3 4	
1	N/A	Lighting Harness Asm	1
2	102845501	Harness, Power, Stretch IQ Plus (includes items 3 through 9)	1
3	N/A	Asm, #4 Grn Wire, 89"	1
4	N/A	Asm, #4 Wht Wire, 88.5"	1
5	N/A	Asm, #10 Org Wire, 89.5"	1
6	N/A	Asm, #10 Blu Wire, 95.5"	1
7	N/A	Asm, #4 Red Wire, 67.5"	1
8	N/A	Asm, #4 Blk Wire, 57.5"	1
9	8639	Tie Wrap, 11" Nylon	6
10	102938301	Chrgr Harness, Iq Plus, Shelf	1
11	103222101	Asm, Wire Harness, Villager 8, Electric	1

Note: Item 1 and 9 not shown.

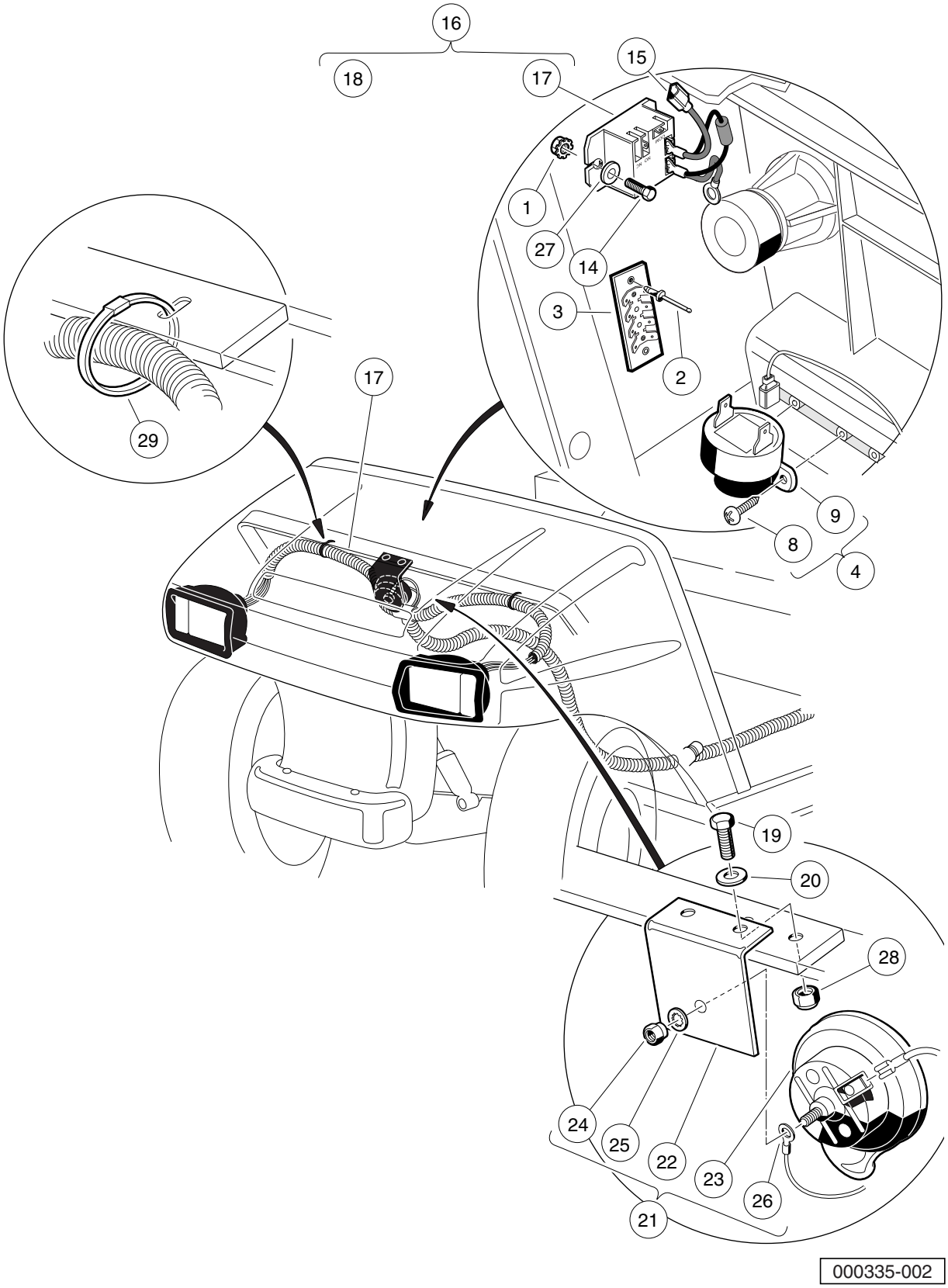
16
18
17
15
1
27
14
3
2
17
29
9
8
4
19
20
28
24
25
22
23
26
21
000335-002

FRONT BODY ELECTRICAL COMPONENTS – VILLAGER 6

ITEM	PART NO.	DESCRIPTION	QTY
		1 2 3 4	
1	1011229	Locknut, #6-32 Whiz	2
2	1013357	Rivet, 5/32 Aluminum Pop	2
3	1016356	Terminal Block with Insulator	1
4	1016859	Kit, Reverse Buzzer (includes items 5 through 13)	1
5	1011229	Locknut, #6-32 Whiz	1
6	1012431	Washer, #4 Flat	2
7	N/A	Screw, #6-32 X 1/2 Hex Washer-Head	1
8	1016849	Screw, #4-24 X 0.33 Pan-Head Machine	2
9	1016851	Buzzer, Reverse (9-48 VDC)	1
10	N/A	Wire Assembly Black #18	1
11	8056	Screw, #4-40 X 0.75 Round-Head Machine	2
12	8057	Nut, #4-40 Hex Machine	2
13	8058	Lockwasher, #4 Helical Split	2
14	1017853	Screw, #6-32 X 0.75 Hex-Head Machine	2
15	101914401	Assembly, Voltage Suppressor	1
16	103414901	Kit, Relay, 48v 30a W/instr (includes items 17 and 18)	1
17	103397901	Relay, Spst No, 48v 30a, Pmt	1
18	N/A	Kit, Relay, 48v 30a Instrns	1
19	304	Screw, 1/4-20 X 1.0 Hex-Head Cap	2
20	332	Washer, 1/4 Type A Narrow Flat	2
21	4029	Horn (includes items 22 through 26)	1
22	1011825	Horn Bracket	1
23	N/A	Horn, 12-VDC	1
24	101955101	Nut, M6 Hex	1
25	7820	Washer, 5/16 Internal-Tooth	1
26	N/A	5/16 Ring Term.	1
27	7591	Washer, #6 Flat	2
28	8233	Locknut, 1/4-20 Nylon Insert	2
29	8639	Tie Wrap, 11" Nylon	4

Note: Items 5 through 7, and 10 through 13 are included in the reverse buzzer kit, but are not used in this application.

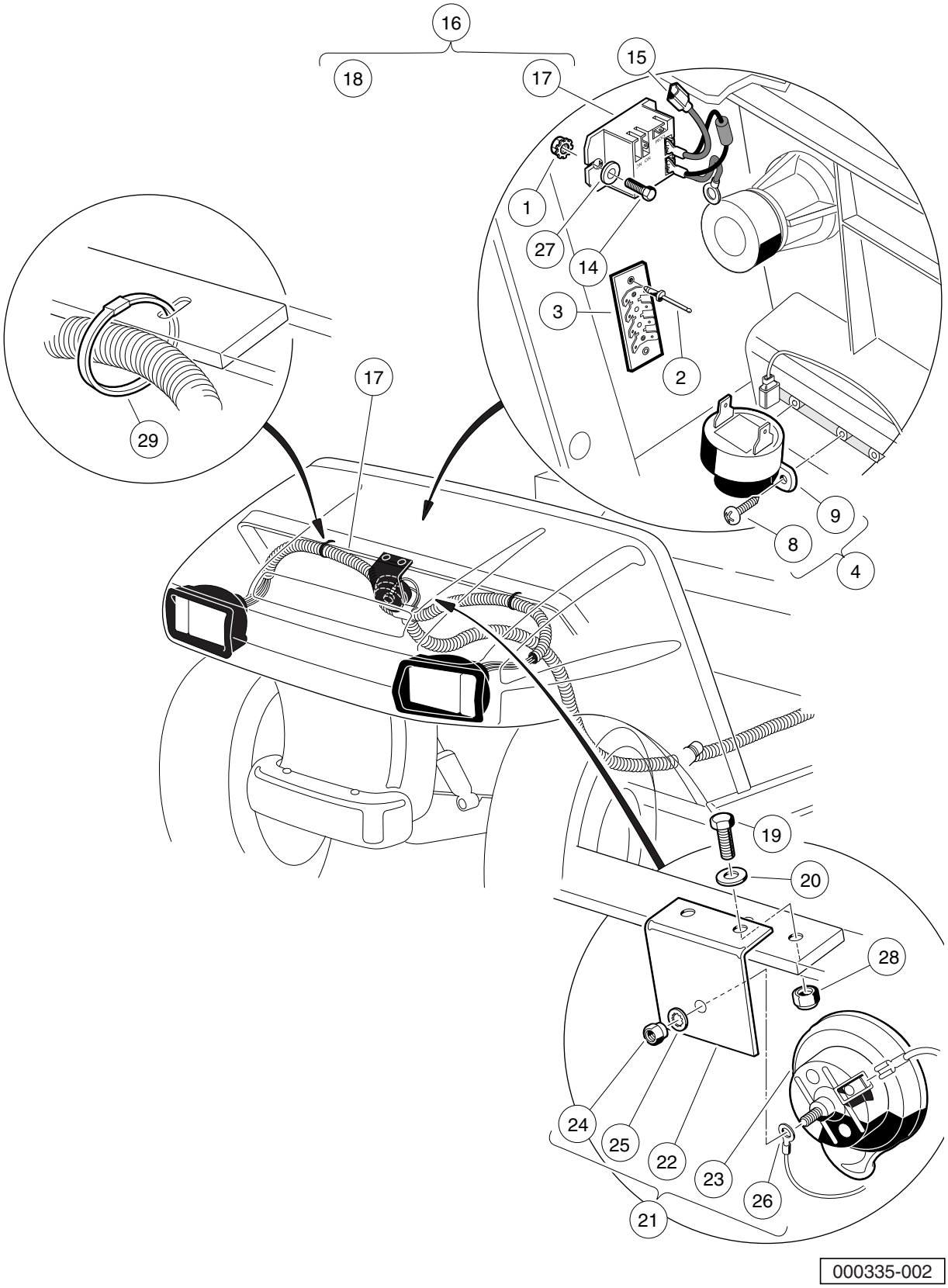
16
18
17
15
1
27
14
3
2
29
17
9
8
4
19
20
28
24
25
22
23
26
21
000335-002

FRONT BODY ELECTRICAL COMPONENTS – VILLAGER 8

ITEM	PART NO.	DESCRIPTION	QTY
		1 2 3 4	
1	1011229	Locknut, #6-32 Whiz	2
2	1013357	Rivet, 5/32 Aluminum Pop	2
3	1016356	Terminal Block with Insulator	1
4	1016859	Kit, Reverse Buzzer (includes items 5 through 13)	1
5	1011229	Locknut, #6-32 Whiz	1
6	1012431	Washer, #4 Flat	2
7	N/A	Screw, #6-32 X 1/2 Hex Washer-Head	1
8	1016849	Screw, #4-24 X 0.33 Pan-Head Machine	2
9	1016851	Buzzer, Reverse (9-48 VDC)	1
10	N/A	Wire Assembly Black #18	1
11	8056	Screw, #4-40 X 0.75 Round-Head Machine	2
12	8057	Nut, #4-40 Hex Machine	2
13	8058	Lockwasher, #4 Helical Split	2
14	1017853	Screw, #6-32 X 0.75 Hex-Head Machine	2
15	101914401	Assembly, Voltage Suppressor	1
16	103414901	Kit, Relay, 48v 30a W/instr (includes items 17 and 18)	1
17	103397901	Relay, Spst No, 48v 30a, Pmt	1
18	N/A	Kit, Relay, 48v 30a Instrns	1
19	304	Screw, 1/4-20 X 1.0 Hex-Head Cap	2
20	332	Washer, 1/4 Type A Narrow Flat	2
21	4029	Horn (includes items 22 through 26)	1
22	1011825	Horn Bracket	1
23	N/A	Horn, 12-VDC	1
24	101955101	Nut, M6 Hex	1
25	7820	Washer, 5/16 Internal-Tooth	1
26	N/A	5/16 Ring Term.	1
27	7591	Washer, #6 Flat	2
28	8233	Locknut, 1/4-20 Nylon Insert	2
29	8639	Tie Wrap, 11" Nylon	4

Note: Items 5 through 7, and 10 through 13 are included in the reverse buzzer kit, but are not used in this application.

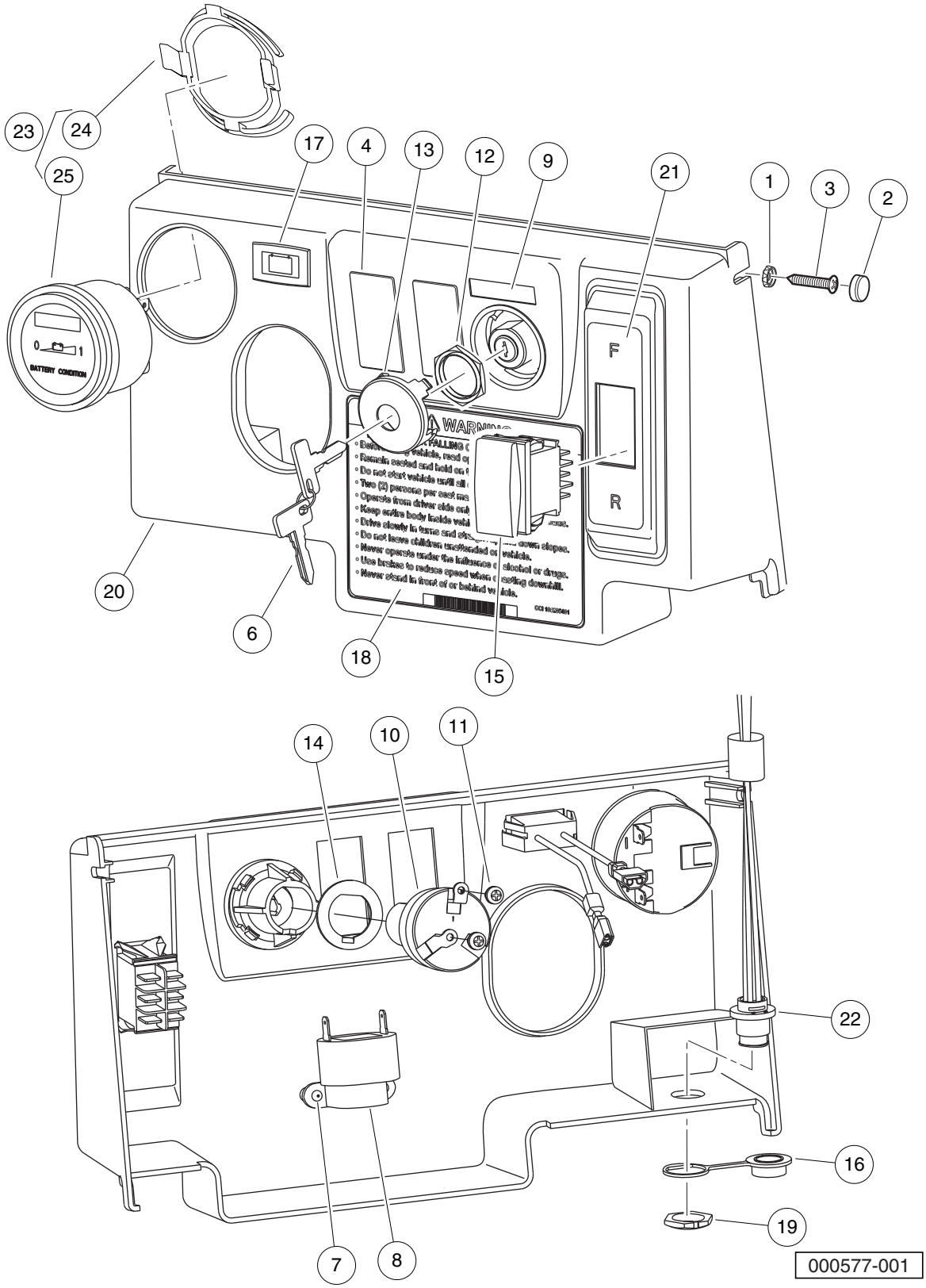
23
24
25
17
4
13
12
9
21
1
3
2
F
R
20
6
18
15
14
10
11
22
16
19
7
8
000577-001

INSTRUMENT PANEL WITH ELECTRICAL COMPONENTS

ITEM	PART NO.	DESCRIPTION	QTY
		1 2 3 4	
1	N/A	Washer, #10 Pan-Head Screw	2
2	1013494	Cover, Screw Head	2
3	1015528	Screw, #10 x 1-1/4 Phillips Head	2
4	103180101	Cover, Hole, Switch, Rocker	2
5	N/A	Asm, Dash, Elec, BCI (Instrument Panel) (includes items 6 through 23)	1
6	1012505	Keys (set of 2)	1
7	1016849	Screw, #4-24 X 0.33 Pan-Head Machine	2
8	1016851	Buzzer, Reverse (9-48 VDC)	1
9	101825101	Decal, Off/On	1
10	101826201	Key Switch, On/Off	1
11	101830601	Screw and Washer Assembly	5
12	101830701	Nut, Key Switch	1
13	101834502	Cap, Black Key Switch	1
14	101851101	Washer, Key Switch	1
15	101856002	Switch, Rocker, Single-Pole	1
16	102196901	Dust Cap	1
17	102508701	Light, Battery	1
18	102518001	Decal, Operating Instr, Elec	1
19	102572401	Nut, Diagnostic Port, Prec	1
20	102977002	Panel, Dash, Center, Gas (Instrument Panel)	1
21	103210301	Decal, Forward/Reverse, Electric	1
22	103218601	Harness, Diagnostic Port	1
23	103354401	Gauge, Battery Cond Ind, Rnd (includes items 24 and 25)	1
24	103348202	Clip, Bci, Round	1
25	N/A	Battery Condition Indicator Gauge	1

12

E

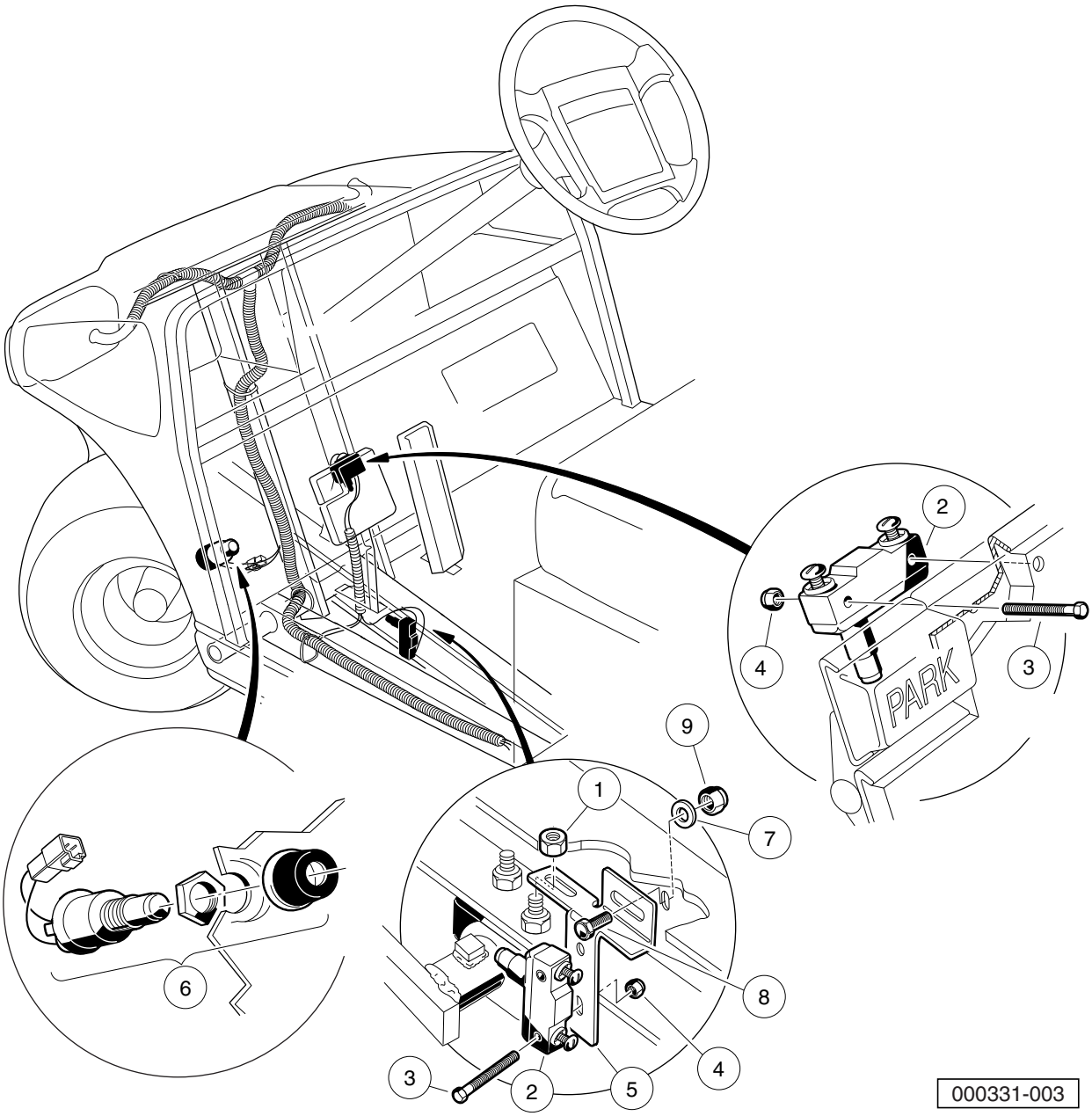

HORN AND BRAKE SWITCHES

ITEM	PART NO.	DESCRIPTION	QTY
		1 2 3 4	
1	1011280	Locknut, 5/16-18	1
2	1011439	Switch, Limit	2
3	1011557	Screw, #6-32 X 1.00 Hex-Head Machine	4
4	101932201	Locknut, #6-32 Nylon	4
5	101957101	Bracket, Brake Light Switch	1
6	101969701	Horn Button and Wire Assembly	1
7	1241	Washer, 5/16 Type A Flat	1
8	7173	Screw, 5/16-18 X 0.75 Hex-Head Cap	1
9	7473	Locknut, 5/16-18 Nylon Insert	1

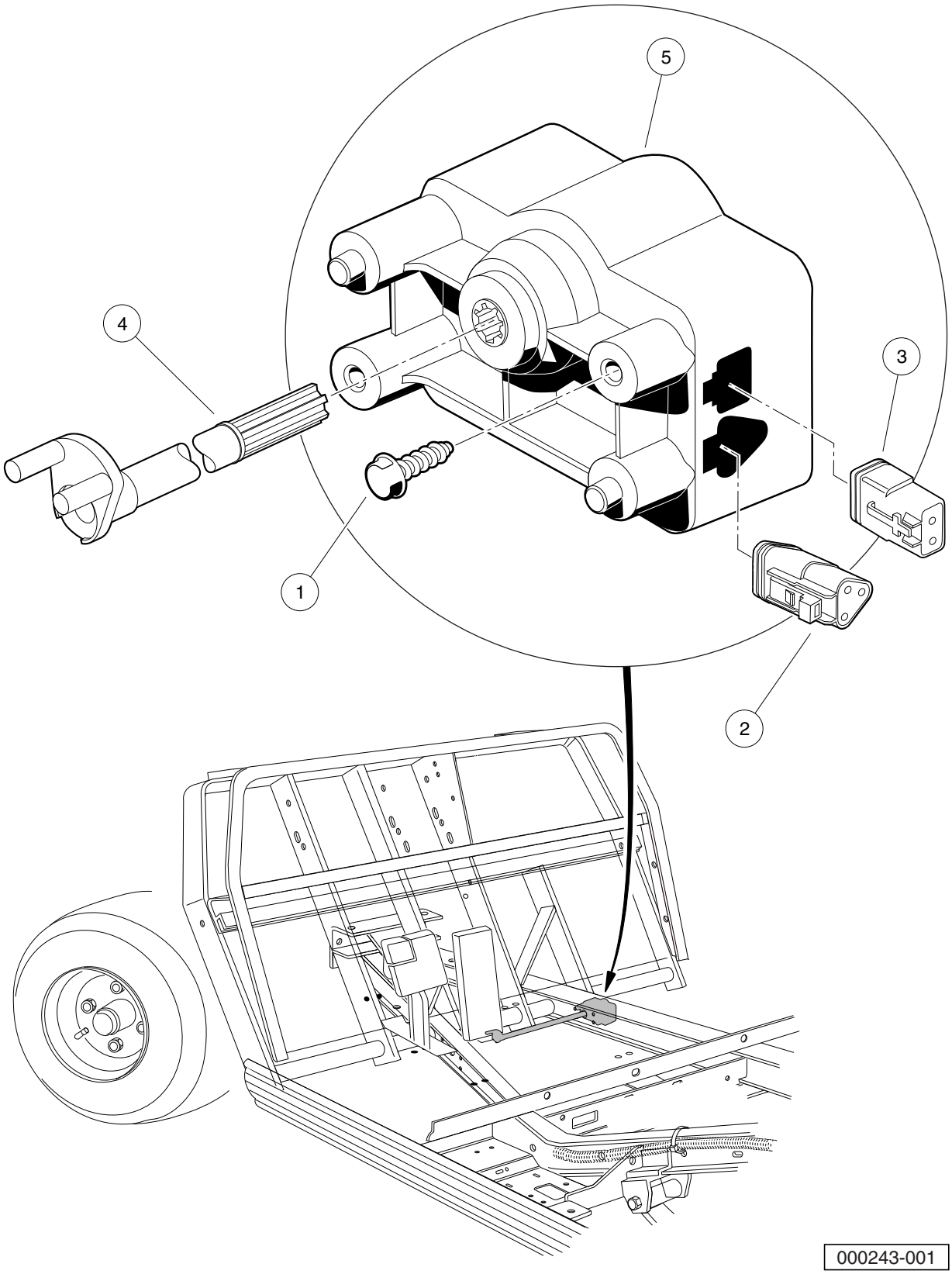
5
4
3
1
2
000243-001

MOTOR CONTROLLER OUTPUT REGULATOR (MCOR)

ITEM	PART NO.	DESCRIPTION	QTY
		1 2 3 4	
1	1015752	Screw, #12-16 X 0.625 Hi-Lo	2
2	101920101	Kit, 3-Pin Wedge Lock	1
3	101936801	Kit, 2-Pin Wedge Lock	1
4	102101001	Bar, Drive, Cast	1
5	102101101	MCOR	1

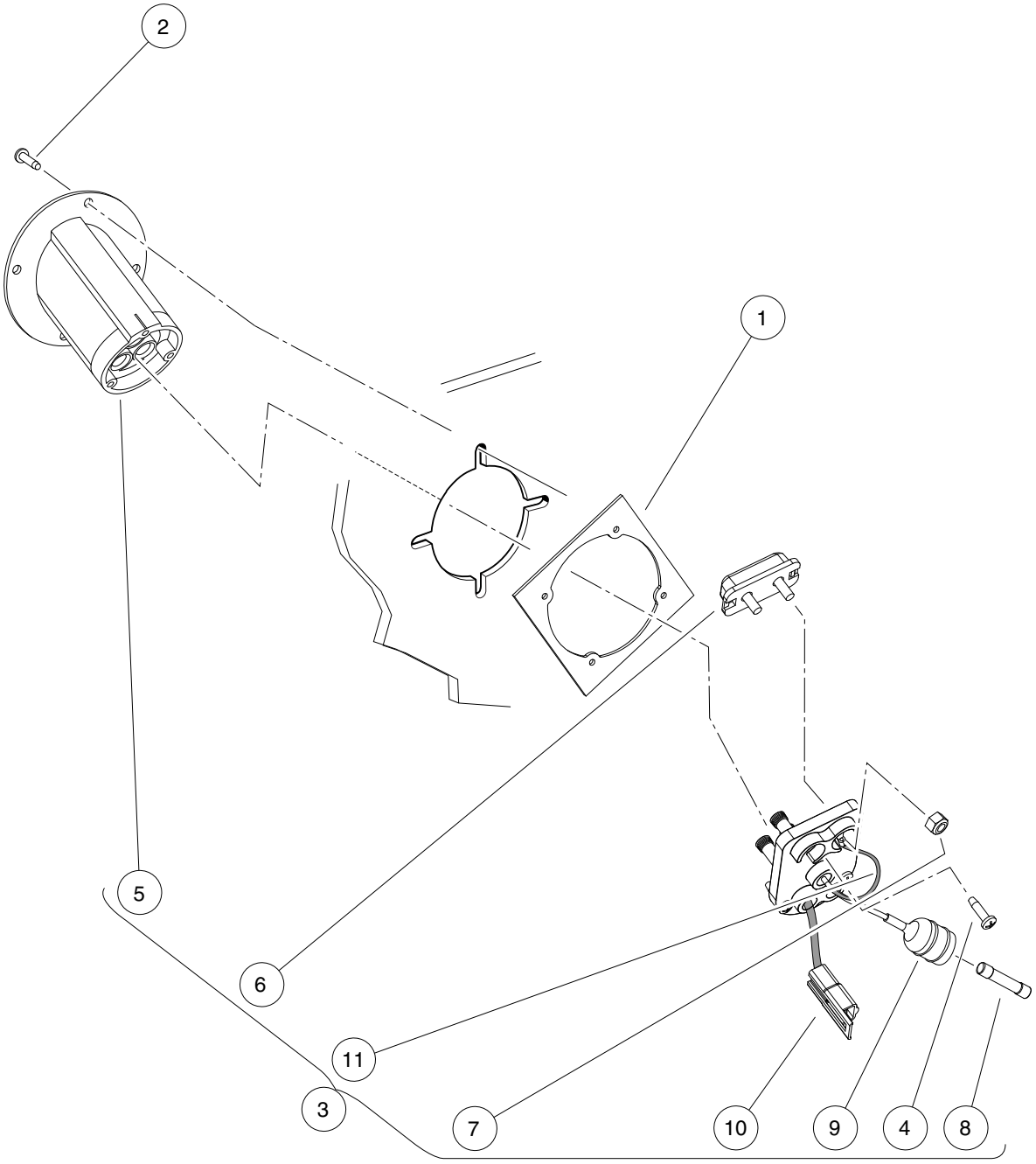

000369-002

BATTERY CHARGER RECEPTACLE

ITEM	PART NO.	DESCRIPTION	QTY
		1 2 3 4	
1	101801001	Plate, Receptacle Backing	1
2	101832001	Screw, #7-19 X 0.625 Phillips Pan-Head Tap	4
3	102848701	Fuse and Receptacle Assembly (includes items 4 through 11)	1
4	1017705	Screw, #8 X 5/8 Phillips Pan-Head Type AB	3
5	101796501	Receptacle	1
6	101796801	Fuse Assembly (includes item 7)	1
7	1013061	Locknut, #10-32 Nylon Insert	2
8	101894901	Fuse, 3/8-Amp	1
9	N/A	Wire Assembly, Sense Lead, Gray	1
10	N/A	Wire Assembly, #10 Red	1
11	N/A	Wire Assembly, #10 Black	1

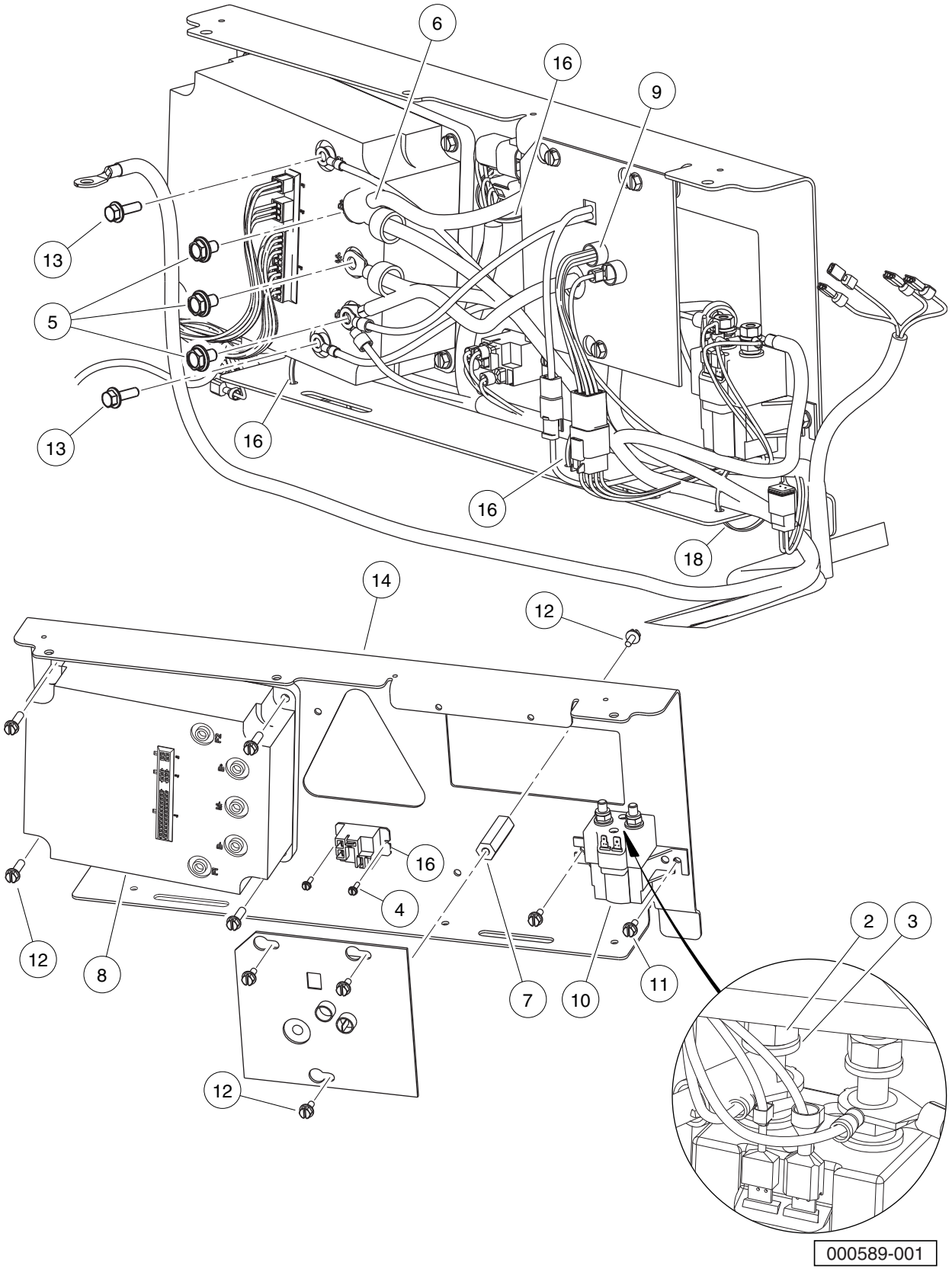
6
16
9
13
5
13
16
16
18
14
12
16
4
12
8
7
10
11
2
3
12
000589-001

ELECTRICAL COMPONENTS – IQ PLUS VILLAGER 6

ITEM	PART NO.	DESCRIPTION	QTY
		1 2 3 4	
1	N/A	Asm, Electrical Component Box (includes items 2 through 18)	1
2	1012528	Nut, M8-1.25 Hex	2
3	1013734	Lockwasher, 8mm Split	2
4	N/A	Screw, #6-32 X 1/2 Hex Washer-Head	2
5	102240501	Bolt, Controller, Terminal	3
6	102440901	Wire Asm, #4 Yellow, 13"	1
7	102769701	Spacer, 2", 1/4-20, Hex	1
8	102774501	Controller, 500 Amp	1
9	102774601	Computer, Onbrd, 8x 6v, 64"	1
10	102774701	Solenoid, 48v, Ith-150	1
11	102817101	Screw, 1/4-20 X .50 Hex Wsh Hd	6
12	102817201	Screw, 1/4-20 X .88 Hex Wsh Hd	4
13	102859501	Screw, M6 X 1 X 20 Ser Hex Flg	2
14	102912801	Plate, Component, Front	1
15	103414901	Kit, Relay, 48v 30a W/instr (includes items 16 and 17)	1
16	103397901	Relay, Spst No, 48v 30a, Pmt	1
17	N/A	Kit, Relay, 48v 30a Instrns	1
18	8990	Tie Wrap, 8" Nylon	5

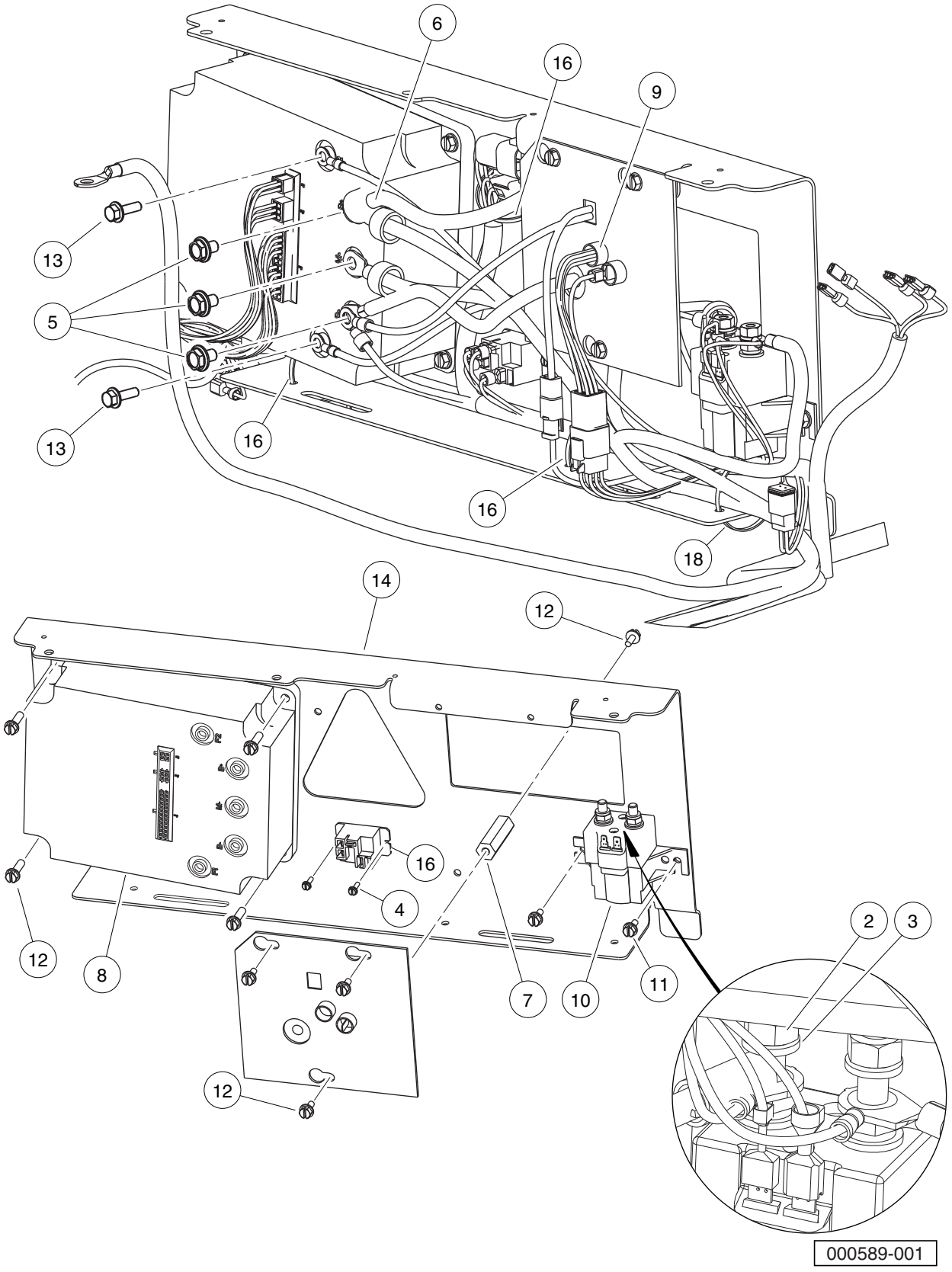
6
16
9
13
5
13
16
16
18
14
12
16
4
12
8
7
10
11
2
3
12
000589-001

ITEM	PART NO.	DESCRIPTION	QTY
		1 2 3 4	
1	N/A	Asm, Electrical Component Box (includes items 2 through 18)	1
2	1012528	Nut, M8-1.25 Hex	2
3	1013734	Lockwasher, 8mm Split	2
4	N/A	Screw, #6-32 X 1/2 Hex Washer-Head	2
5	102240501	Bolt, Controller, Terminal	3
6	102440901	Wire Asm, #4 Yellow, 13"	1
7	102769701	Spacer, 2", 1/4-20, Hex	1
8	102774501	Controller, 500 Amp	1
9	102774601	Computer, Onbrd, 8x 6v, 64"	1
10	102774701	Solenoid, 48v, Ith-150	1
11	102817101	Screw, 1/4-20 X .50 Hex Wsh Hd	6
12	102817201	Screw, 1/4-20 X .88 Hex Wsh Hd	4
13	102859501	Screw, M6 X 1 X 20 Ser Hex Flg	2
14	102912801	Plate, Component, Front	1
15	103414901	Kit, Relay, 48v 30a W/instr (includes items 16 and 17)	1
16	103397901	Relay, Spst No, 48v 30a, Pmt	1
17	N/A	Kit, Relay, 48v 30a Instrns	1
18	8990	Tie Wrap, 8" Nylon	4

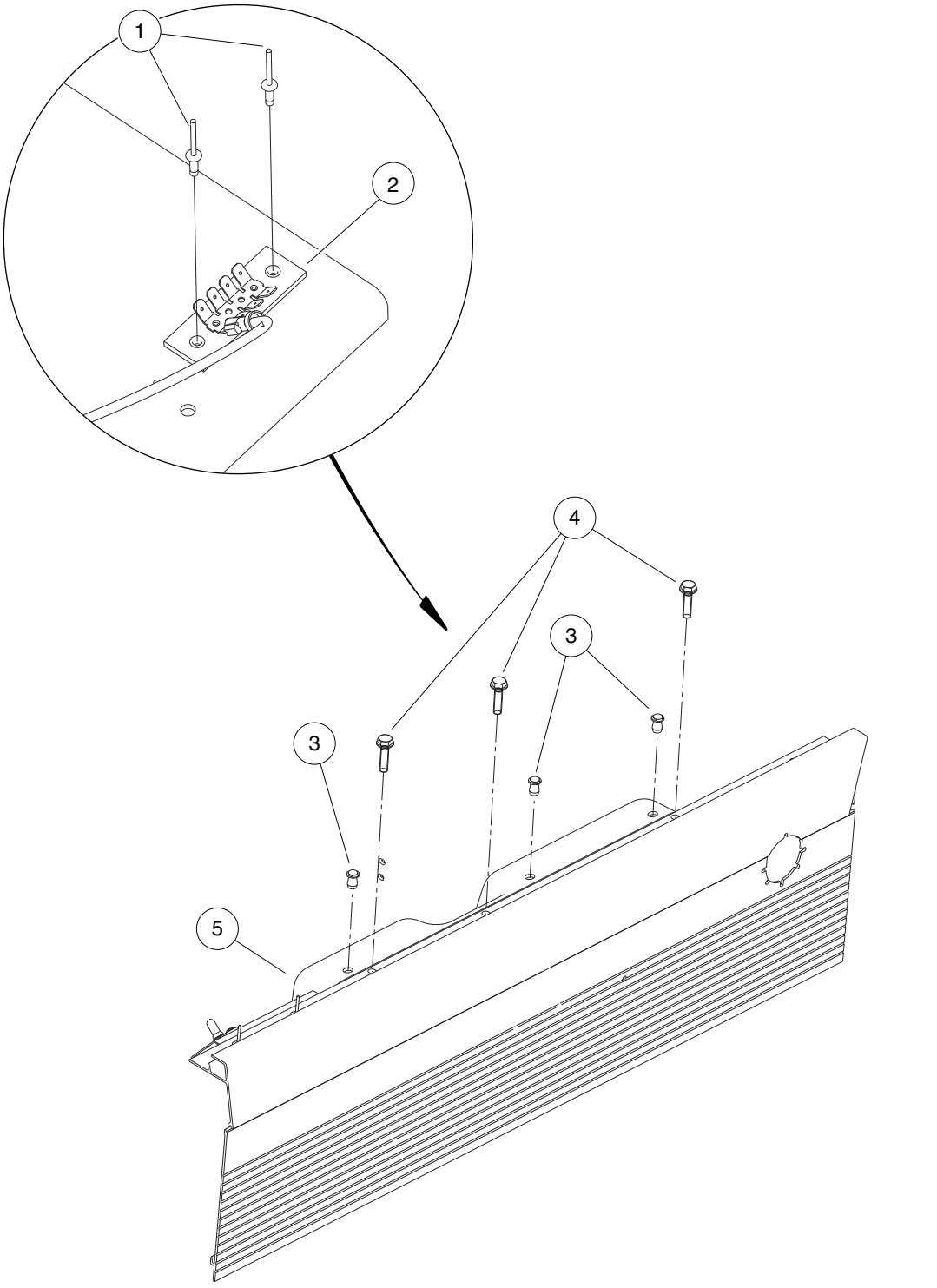

000598-001

ELECTRICAL INSTALLATION – CARRYALL 6

ITEM	PART NO.	DESCRIPTION	QTY
		1 2 3 4	
1	1013357	Rivet, 5/32 Aluminum Pop	2
2	1016356	Terminal Block with Insulator	1
3	1016967	Blind Rivet, Push Type	3
4	102238001	#10-24 Taptite Screw	3
5	102772402	Cover, Electrical Component, Carryall 6	1
6	8990	Tie Wrap, 8" Nylon	11

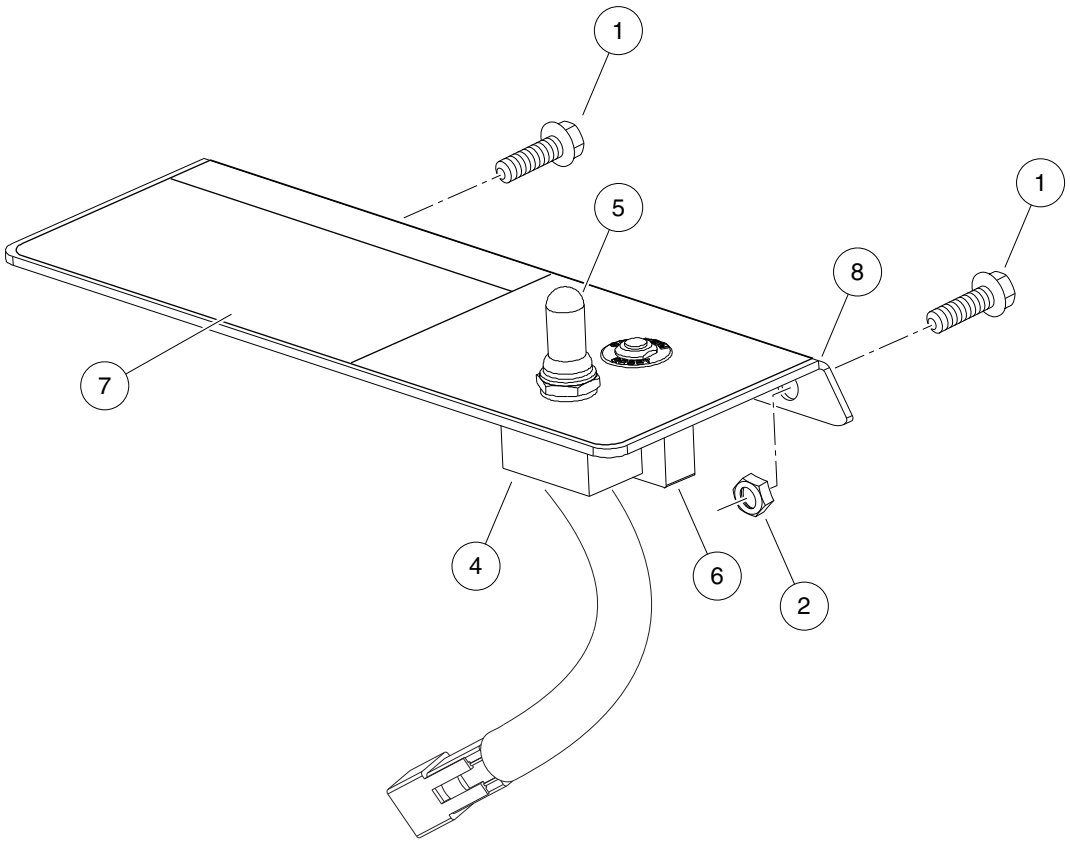

000425-001

TOW/RUN SWITCH – IQ PLUS VEHICLES

ITEM	PART NO.	DESCRIPTION	QTY
		1 2 3 4	
1	1012126	Screw, #10-32 X .625 Hx Washer	A/R
2	1013061	Locknut, #10-32 Nylon Insert	2
3	N/A	Tow/Run Switch Assembly (includes items 4 through 8)	1
4	101908101	Switch Assembly, Tow/Run	1
5	101908401	Boot, Switch	1
6	102838101	Circuit Breaker 250vac-50vdc	1
7	102845101	Decal, Tow Switch	1
8	102915701	Plate, Switch, Run Tow, Mode	1

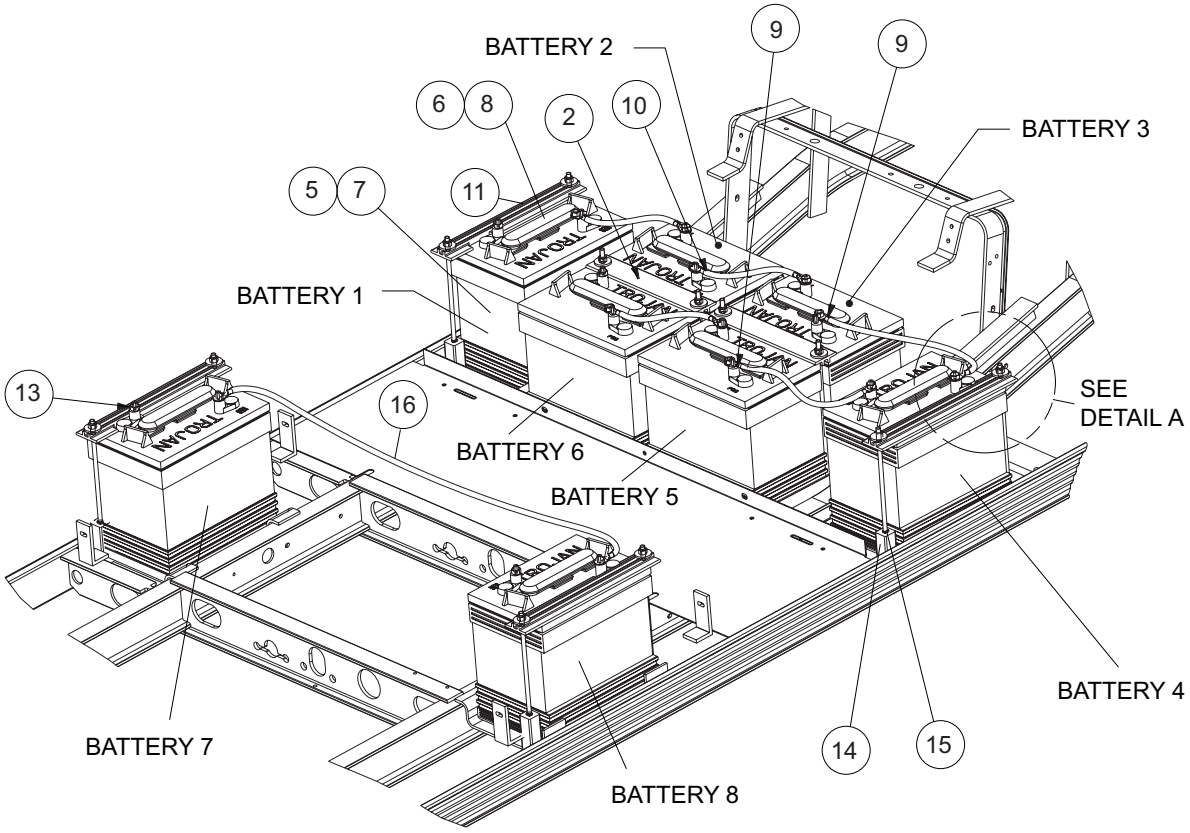

DETAIL A

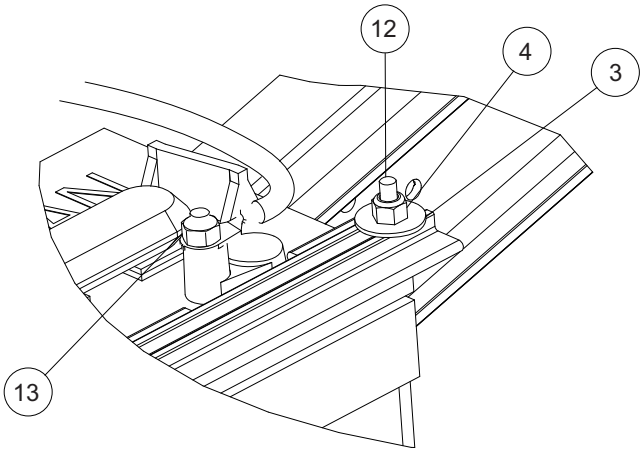

000408-001

BATTERIES – VILLAGER 6 IQ PLUS WITH T-105 BATTERIES

ITEM	PART NO.	DESCRIPTION	QTY
		1 2 3 4	
1	N/A	Installation, Battery, T-105 Villager 6 and 8 (includes items 2 through 16)	1
2	101090801	Hold-Down, Battery	2
3	1011578	Washer, 5/16 Type B Flat	12
4	1015072	Locknut, 5/16-18 Nylon Insert	12
5	101661601	Battery, 6v Trojan T105 (Wet) (includes item 6)	8
6	101831401	Battery Cap 6 Volt	1
7	101661602	Battery, 6v Trojan T105 (Dry, also known as moist) (includes item 8)	8
8	101831401	Battery Cap 6 Volt	1
9	102002801	Wire Assy, #4 Black	2
10	102002901	Wire Assy, #4 Black	3
11	102766201	Hold Down, Outside	4
12	102845203	Rod, Battery Hold Down 10.7"	12
13	102873401	5/16-18 Heavy Hex Nut	16
14	102980801	Extr, Plastic, 1 X 1 X 3	4
15	102980901	Clamp, Hose, Nylon, .25	1
16	103198201	Asm, #4 Blk Wire, 42"	1

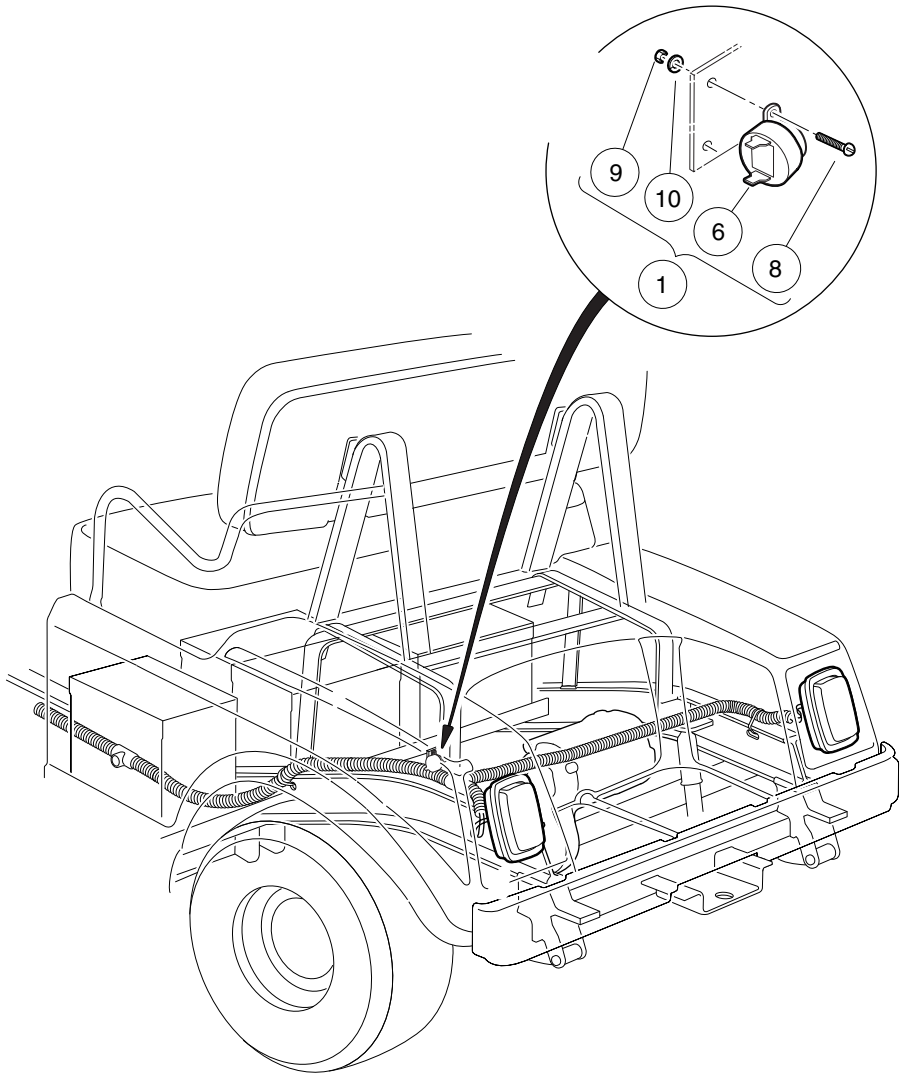

000433-001

REAR REVERSE BUZZER

ITEM	PART NO.	DESCRIPTION	QTY
		1 2 3 4	
1	1016859	Kit, Reverse Buzzer (includes items 2 through 10)	1
2	1011229	Locknut, #6-32 Whiz	1
3	1012431	Washer, #4 Flat	2
4	N/A	Screw, #6-32 X 1/2 Hex Washer-Head	1
5	1016849	Screw, #4-24 X 0.33 Pan-Head Machine	2
6	1016851	Buzzer, Reverse (9-48 VDC)	1
7	N/A	Wire Assembly Black #18	1
8	8056	Screw, #4-40 X 0.75 Round-Head Machine	2
9	8057	Nut, #4-40 Hex Machine	2
10	8058	Lockwasher, #4 Helical Split	2

Note: Note: Items 2 through 5 and 7 are included in the kit, but are not used in this application.

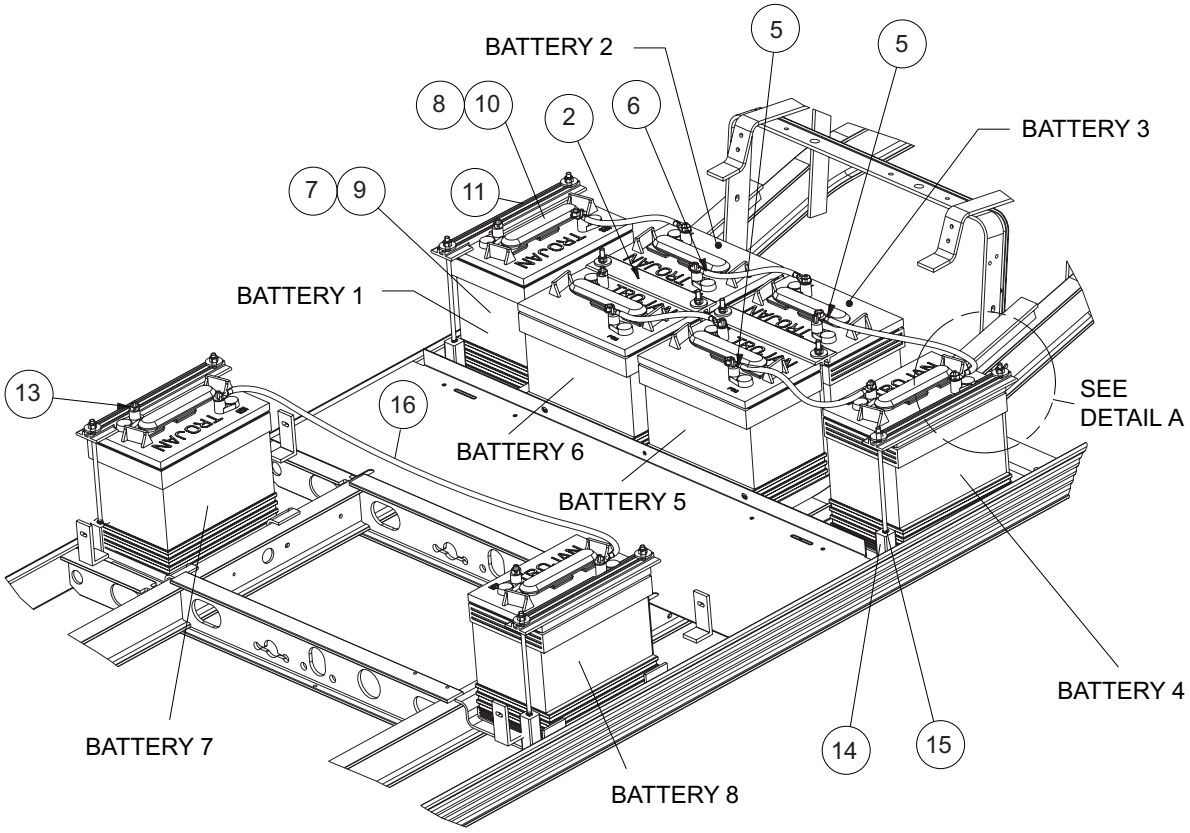

DETAIL A

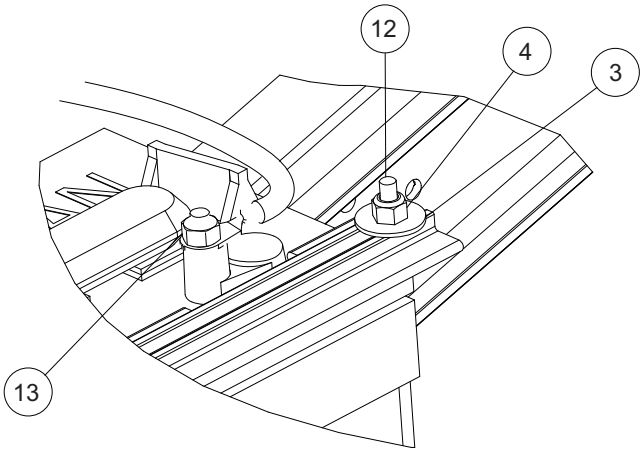

000408-002

BATTERIES – VILLAGER 6 IQ PLUS WITH T-145 BATTERIES

ITEM	PART NO.	DESCRIPTION	QTY
		1 2 3 4	
1	N/A	Installation, Battery, T-145 Villager 6 and 8 (includes items 2 through 16)	1
2	101090801	Hold-Down, Battery	2
3	1011578	Washer, 5/16 Type B Flat	12
4	1015072	Locknut, 5/16-18 Nylon Insert	12
5	102002801	Wire Assy, #4 Black	2
6	102002901	Wire Assy, #4 Black	3
7	102764401	Battery, 6v Trojan T145 (wet) (includes item 8)	8
8	101831401	Battery Cap 6 Volt	1
9	102764402	Battery, 6v Trojan T145 (Dry, also known as moist) (includes item 10)	8
10	101831401	Battery Cap 6 Volt	1
11	102766201	Hold Down, Outside	4
12	102845204	Rod, Battery Hold Down 12"	12
13	102873401	5/16-18 Heavy Hex Nut	16
14	102980801	Extr, Plastic, 1 X 1 X 3	4
15	102980901	Clamp, Hose, Nylon, .25	4
16	103198201	Asm, #4 Blk Wire, 42"	1

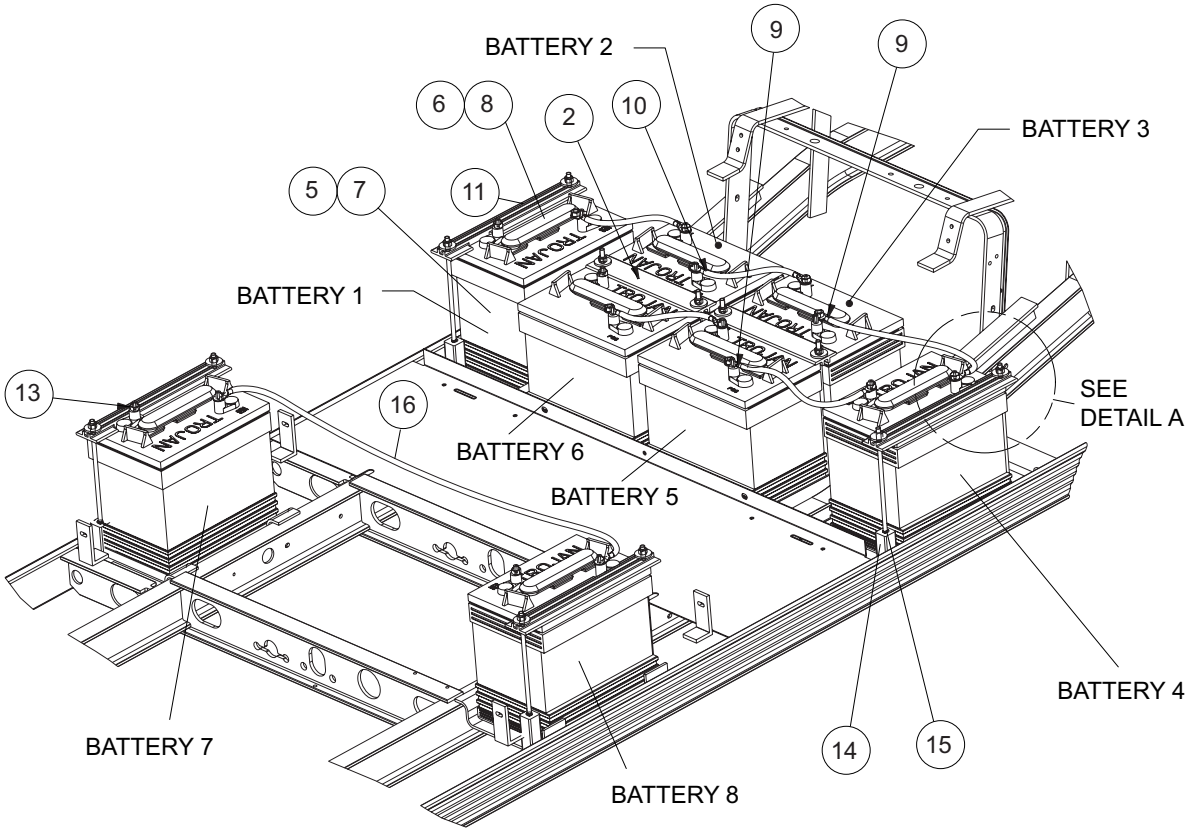

DETAIL A

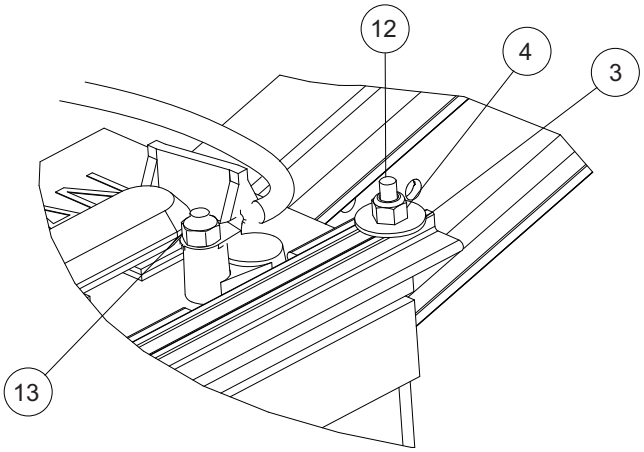

000408-001

BATTERIES – VILLAGER 8 IQ PLUS WITH T-105 BATTERIES

ITEM	PART NO.	DESCRIPTION	QTY
		1 2 3 4	
1	N/A	Installation, Battery, T-105 Villager 6 and 8 (includes items 2 through 16)	1
2	101090801	Hold-Down, Battery	2
3	1011578	Washer, 5/16 Type B Flat	12
4	1015072	Locknut, 5/16-18 Nylon Insert	12
5	101661601	Battery, 6v Trojan T105 (Wet) (includes item 6)	8
6	101831401	Battery Cap 6 Volt	1
7	101661602	Battery, 6v Trojan T105 (Dry, also known as moist) (includes item 8)	8
8	101831401	Battery Cap 6 Volt	1
9	102002801	Wire Assy, #4 Black	2
10	102002901	Wire Assy, #4 Black	3
11	102766201	Hold Down, Outside	4
12	102845203	Rod, Battery Hold Down 10.7"	12
13	102873401	5/16-18 Heavy Hex Nut	16
14	102980801	Extr, Plastic, 1 X 1 X 3	4
15	102980901	Clamp, Hose, Nylon, .25	1
16	103198201	Asm, #4 Blk Wire, 42"	1

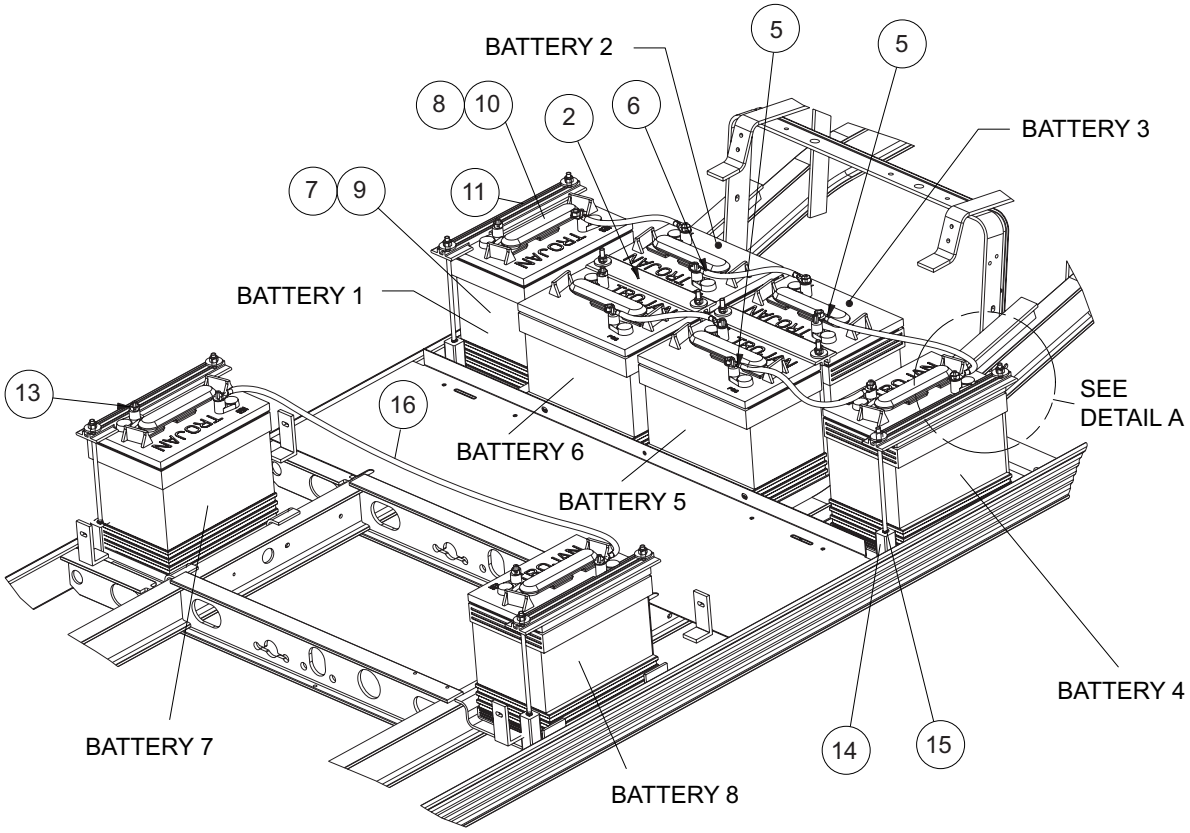

DETAIL A

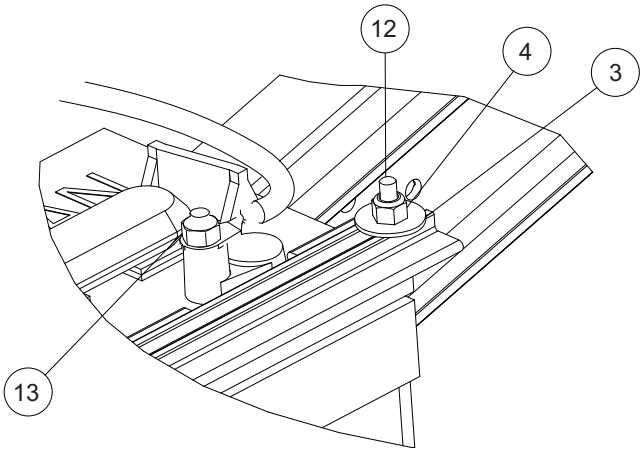

000408-002

BATTERIES – VILLAGER 8 IQ PLUS WITH T-145 BATTERIES

ITEM	PART NO.	DESCRIPTION	QTY
		1 2 3 4	
1	N/A	Installation, Battery, T-145 Villager 6 and 8 (includes items 2 through 16)	1
2	101090801	Hold-Down, Battery	2
3	1011578	Washer, 5/16 Type B Flat	12
4	1015072	Locknut, 5/16-18 Nylon Insert	12
5	102002801	Wire Assy, #4 Black	2
6	102002901	Wire Assy, #4 Black	3
7	102764401	Battery, 6v Trojan T145 (wet) (includes item 8)	8
8	101831401	Battery Cap 6 Volt	1
9	102764402	Battery, 6v Trojan T145 (Dry, also known as moist) (includes item 10)	8
10	101831401	Battery Cap 6 Volt	1
11	102766201	Hold Down, Outside	4
12	102845204	Rod, Battery Hold Down 12"	12
13	102873401	5/16-18 Heavy Hex Nut	16
14	102980801	Extr, Plastic, 1 X 1 X 3	4
15	102980901	Clamp, Hose, Nylon, .25	4
16	103198201	Asm, #4 Blk Wire, 42"	1

12

E

ELECTRIC MOTOR

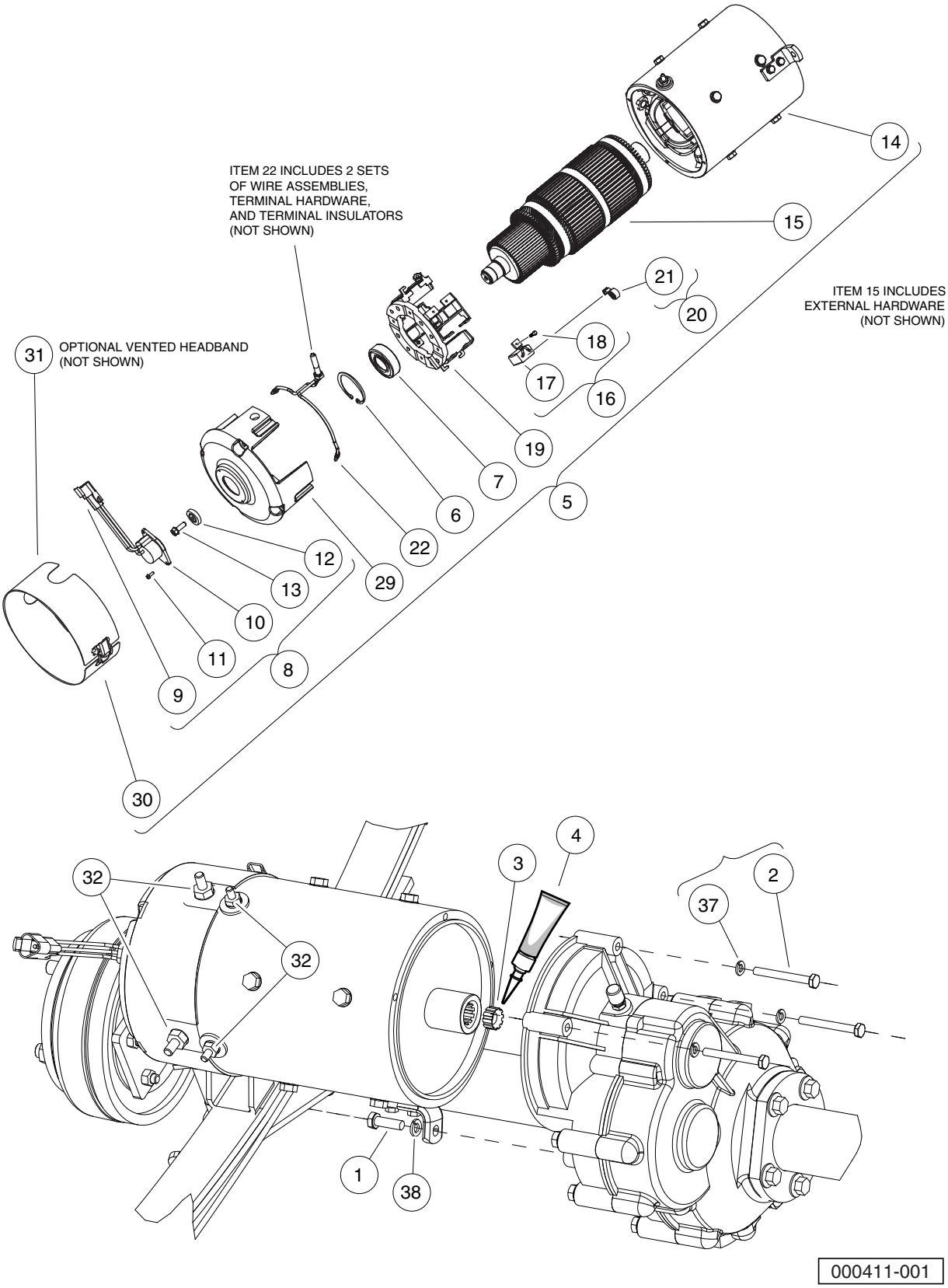
ITEM 22 INCLUDES 2 SETS
OF WIRE ASSEMBLIES,
TERMINAL HARDWARE,
AND TERMINAL INSULATORS
(NOT SHOWN)
ITEM 15 INCLUDES
EXTERNAL HARDWARE
(NOT SHOWN)
31 OPTIONAL VENTED HEADBAND
(NOT SHOWN)
14
15
21
20
18
17
16
19
7
6
5
22
12
13
29
10
11
8
9
30
4
3
2
37
32
32
1
38
000411-001

MOTOR (MODEL DA5-4006)

ITEM	PART NO.	DESCRIPTION	QTY
		1 2 3 4	
1	1010934	Screw, 5/16-18 X 1.00 Hex Cap	1
2	1014201	Screw, 1/4-20 X 2.25 Hex Cap	3
3	102235201	Bumper, Drive Unit	1
4	102243403	Lubricant, Moly-Teflon (Single-Use Tube)	1
5	102775101	IQ Plus Electric Motor, 48-VDC 3.7 hp (includes items 6 through 30)	1
6	N/A	Ring, 2.24" Internal Retaining	1
7	102186401	Bearing, Ball	1
8	102704901	Kit, Speed Sensor (includes items 9 through 13)	1
9	101942301	Kit, 3-Pin Wedge Lock	1
10	N/A	Sensor, Motor Speed, ADC	1
11	N/A	Screw, #8-32, Taptite Thread	2
12	N/A	Magnet, ADC Motor	1
13	N/A	Screw, 1/4-20 x 0.5	1
14	N/A	Asm, Frame And Field, 3.7 Hp	1
15	N/A	Armature (Includes external hardware - not shown)	1
16	102938601	Kit, Brush, 3.7 Hp (includes items 17 and 18)	1
17	N/A	Brush, Motor	8
18	N/A	Screw, Taptite	8
19	102938701	Asm, Brush Box, 3.7 Hp	1
20	102938801	Kit, Brush Spring, 3.7 Hp (includes item 21)	1
21	N/A	Brush Spring	8
22	102938901	Kit, Brush Lead Asm, 3.7 Hp (includes items 23 through 28)	1
23	N/A	Terminal and Lead Assembly	2
24	N/A	Insulator, Terminal	2
25	N/A	Washer, Insulating	2
26	N/A	Washer, Flat, 5/16, Brass/Bronze	2
27	N/A	Nut, 5/16, Steel	4
28	N/A	Lockwasher, 5/16, Steel	2
29	102939001	Commutator End Head, 3.7 Hp	1
30	102939101	Sealed Headband, 3.7 Hp	1
31	102939102	Vented Headband, 3.7 HP (optional - not shown)	1
32	102951701	Pkg, Terminal Hardware, 3.7hp (includes items 33 through 36)	1
33	N/A	Nut, 5/16, Steel	2
34	N/A	Lockwasher, 5/16, Steel	2
35	N/A	Nut, 1/4-20, Steel	2
36	N/A	Lockwasher, 1/4-20, Steel	2
37	451	Lockwasher, 1/4 Helical Split	3
38	7174	Lockwasher, 5/16 Split	1

13

E

TRANSAXLE – ELECTRIC VEHICLES

14

E

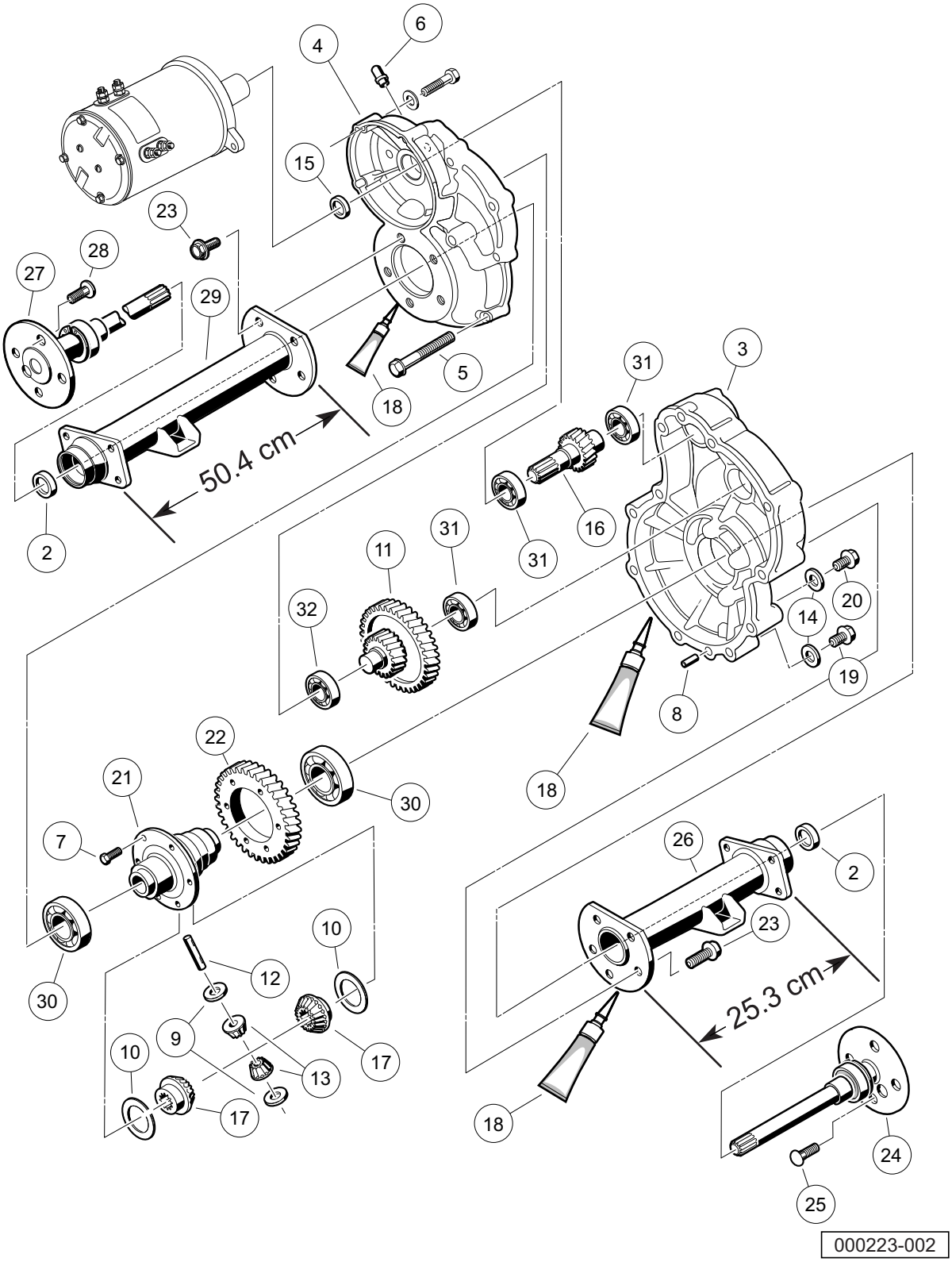

ITEM	PART NO.	DESCRIPTION	QTY
		1 2 3 4	
1	102771701	Transaxle, Electric (includes items 2 through 32)	1
2	1013794	Axle Shaft Oil Seal	2
3	101895401	Gear Case, Left-Hand	1
4	101895501	Gear Case, Passenger-Side	1
5	101897001	Screw, M8-1.25 X 60mm Hex-Head	11
6	101897201	Breather	1
7	101897401	Screw, M10-1.25 X 25mm	6
8	101897601	Pin, 11mm OD X 8.5mm ID X 10mm	2
9	101903601	Washer, Thrust	2
10	101903701	Washer, Thrust	2
11	101906901	Intermediate Shaft Assembly	1
12	101922101	Pin, 15.99mm X 88.7mm Dowel	1
13	101923001	Gear, Differential Idler	2
14	101923201	Gasket	2
15	101923501	Seal, Lip	1
16	101923701	Shaft, Input	1
17	101923901	Gear, Differential	2
18	101928701	Liquid Gasket (Transaxle case)	A/R
19	101972101	Plug, M14-1.5 X 12mm Magnetic	1
20	101972201	Plug, M14-1.5 X 12mm Hex	1
21	102356601	Housing, Differential, 6 Bolt	1
22	102356801	Gear, Differential Output, 6-Bolt	1
23	102357001	Screw, Flg Hd M10 X 1.5 X 30	10
24	102886301	Axle Assembly, Driver-Side (includes item 25)	1
25	101922201	Lug Stud	4
26	102886401	Tube, Axle, Driver-Side	1
27	102886501	Axle Assembly, Passenger-Side (includes item 28)	1
28	101922201	Lug Stud	4
29	102886601	Tube, Axle, Passenger-Side	1
30	7330	Inner Axle Tube Bearing	2
31	7335	Bearing	3
32	7336	Bearing	1

14

E

BATTERY CHARGER

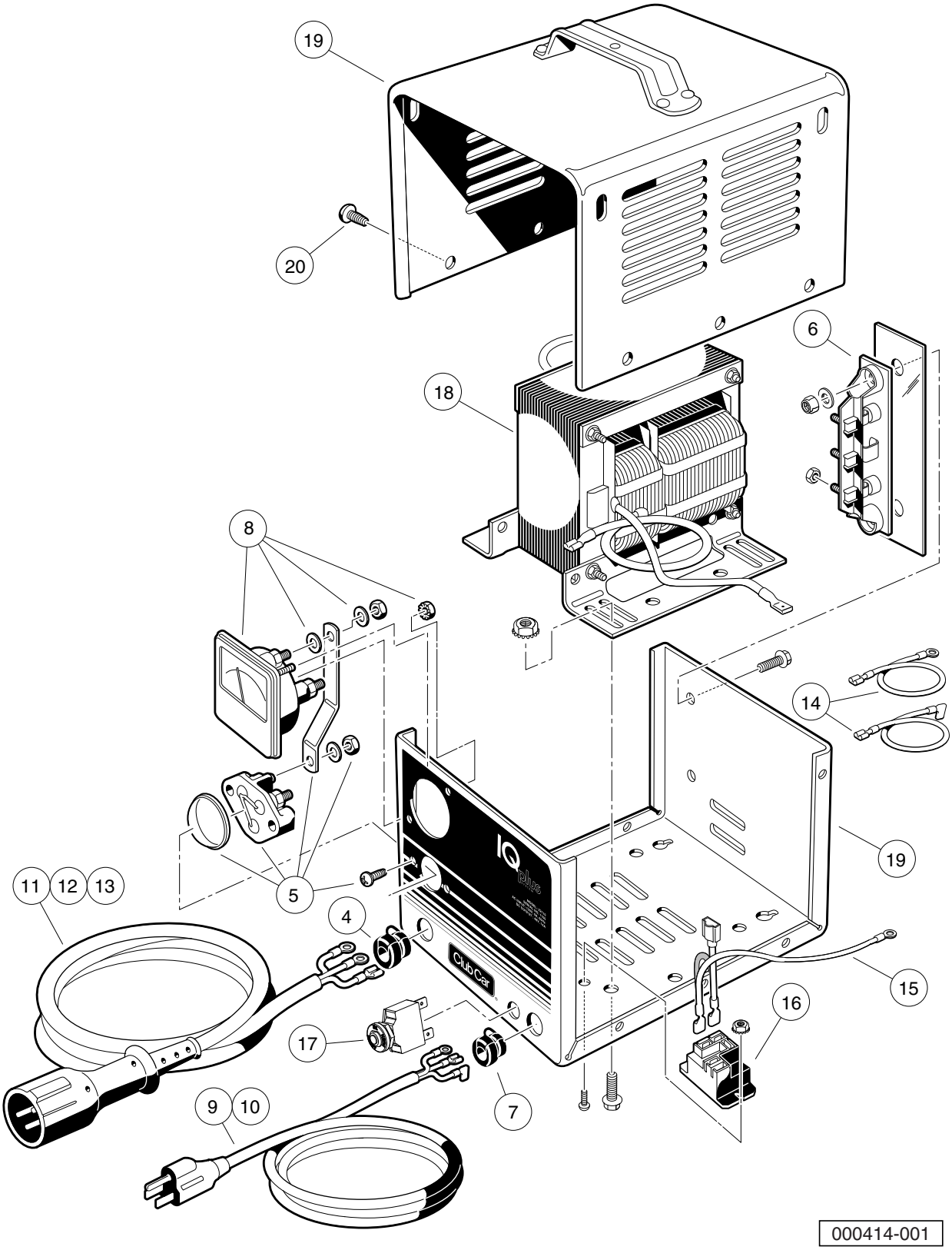
19
20
6
18
8
14
19
11
12
13
5
4
15
16
17
9
10
7
000414-001

IQ PLUS DOMESTIC BATTERY CHARGER (MODEL 25730)

ITEM	PART NO.	DESCRIPTION	QTY
		1 2 3 4	
1	102847801	48-V/17-A IQ Plus (9-ft. DC Cord, 6-ft. AC Cord)	1
2	102847802	48-V/17-A IQ Plus (12-ft. DC Cord, 9-ft. AC Cord)	1
3	102847803	48-V/17-A IQ Plus (20-ft. DC Cord, 9-ft. AC Cord) (includes items 4 through 20)	1
4	1012098	Bushing, DC Cord	1
5	1012101	Fuse Assembly	1
6	N/A	Rectifier with Heatsink Assembly	1
7	1015917	Bushing, AC Cord	1
8	101828501	Ammeter	1
9	101828801	Cord, AC, 80-Inch (203 cm)	1
10	101828802	Cord, AC, 108-Inch (274 cm)	1
11	101828901	Cord, DC, 113-Inch (287 cm)	1
12	101828902	Cord, DC, 154-Inch (391 cm)	1
13	101828903	Cord, DC, 250-Inch (635 cm)	1
14	101831101	Wire Assembly Kit	1
15	101914401	Assembly, Voltage Suppressor	1
16	102275401	Relay, 48-VDC	1
17	102838101	Circuit Breaker 250vac-50vdc	1
18	N/A	Transformer, Battery Charger	1
19	N/A	Case, Battery Charger	1
20	7577	Screw, #10 X 0.50 Phillips Pan-Head	10

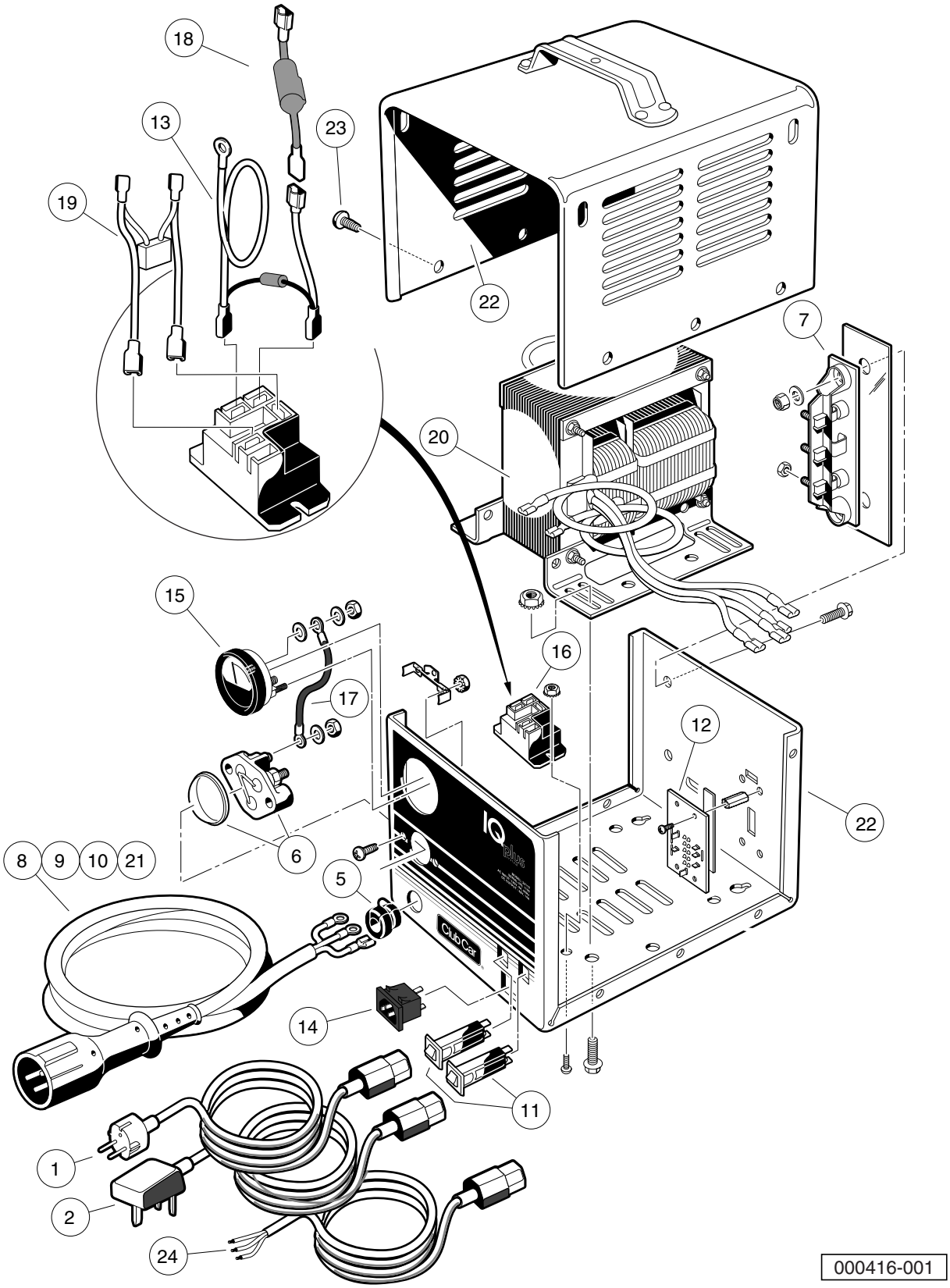
18
13
23
19
22
7
20
15
16
17
12
22
6
8
9
10
21
5
14
11
1
2
24
000416-001

IQ PLUS BATTERY CHARGER (MODEL 25880), EXPORT AND EUROPEAN

ITEM	PART NO.	DESCRIPTION	QTY
		1 2 3 4	
1	101958201	Cord, UK, AC, Battery Charger	1
2	101958301	Cord, European AC, Battery Charger	1
3	N/A	Charger, Export and European	1
4	N/A	Charger, Export and European (includes items 5 through 23)	1
5	1012098	Bushing, DC Cord	1
6	1012101	Fuse Assembly	1
7	N/A	Rectifier with Heatsink Assembly	1
8	101828901	Cord, DC, 113-Inch (287 cm)	1
9	101828902	Cord, DC, 154-Inch (391 cm)	1
10	101828903	Cord, DC, 250-Inch (635 cm)	1
11	101838401	Circuit Breaker	2
12	101838601	Four-Position Switch	1
13	101914401	Assembly, Voltage Suppressor	1
14	101973501	Receptacle, AC Cord	1
15	101976601	Ammeter with Mounting Bracket	1
16	102275401	Relay, 48-VDC	1
17	N/A	Wire, Jumper	1
18	****	Limiter, Current	1
19	****	Wire Assembly, Battery Charger	1
20	****	Transformer, Battery Charger	1
21	102940801	Cord, Dc	1
22	N/A	Case, Battery Charger	1
23	7577	Screw, #10 X 0.50 Phillips Pan-Head	10
24	102939501	Cord, European AC, Battery Charger	1

**** Special order item available upon request.

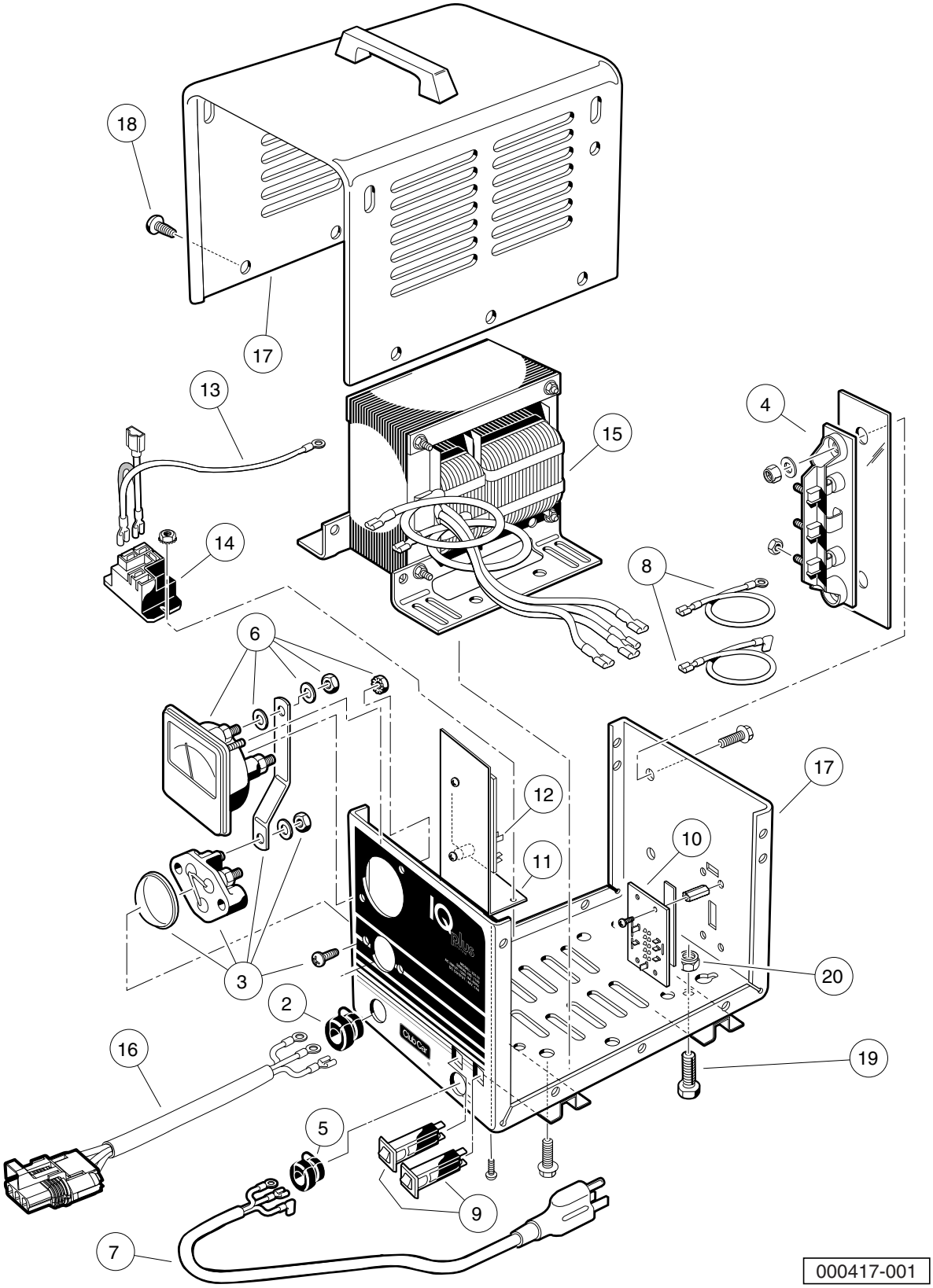
18
17
13
15
4
14
8
6
12
17
11
10
3
20
2
16
19
5
9
7
000417-001

IQ PLUS ONBOARD BATTERY CHARGER (MODEL 25660), EXPORT

ITEM	PART NO.	DESCRIPTION	QTY
		1 2 3 4	
1	N/A	Battery Charger, Onboard, International, IQ Plus (includes items 2 through 20)	1
2	1012098	Bushing, DC Cord	1
3	1012101	Fuse Assembly	1
4	N/A	Rectifier with Heatsink Assembly	1
5	1015917	Bushing, AC Cord	1
6	101828501	Ammeter	1
7	101829001	Cord, AC, 22-Inch (56 cm)	1
8	101831101	Wire Assembly Kit	1
9	101838401	Circuit Breaker	2
10	101838601	Four-Position Switch	1
11	****	Mounting Bracket, Relay	1
12	101841901	Control Board	1
13	101914401	Assembly, Voltage Suppressor	1
14	102275401	Relay, 48-VDC	1
15	****	Transformer, Battery Charger	1
16	102940801	Cord, Dc	1
17	N/A	Case, Battery Charger	1
18	7577	Screw, #10 X 0.50 Phillips Pan-Head	12
19	7847	Screw, 1/4-20 X 0.75 Hex-Head Cap	4
20	8233	Locknut, 1/4-20 Nylon Insert	4

**** Special order item available upon request.

15

E

MAINTENANCE AND SERVICE TOOLS

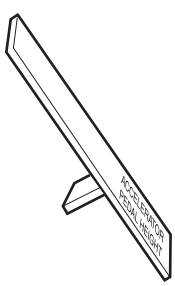

1

2

3

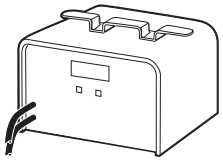

4

5

6

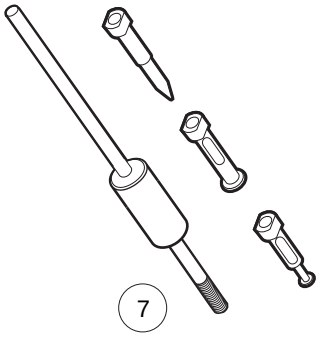

7

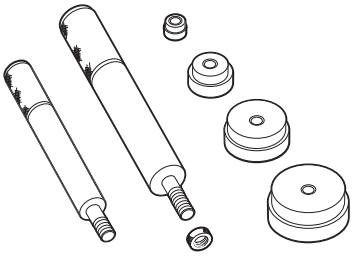

8

9

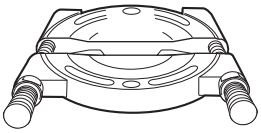

10

11

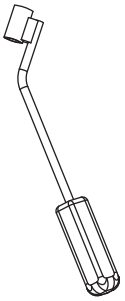

12

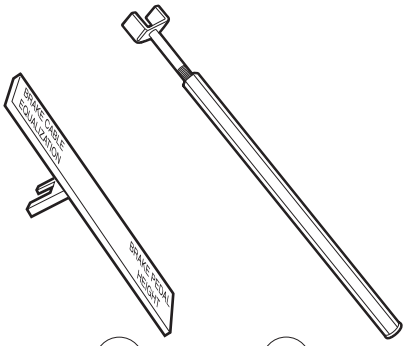

14 15

13

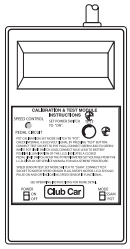

16

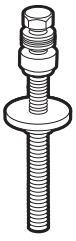

17

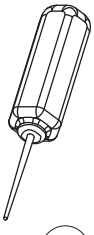

18

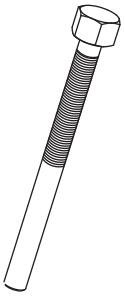

19

ITEM	PART NO.	DESCRIPTION	QTY DIESEL	QTY GAS	QTY ELEC
		1 2 3 4 The following tool list includes all tools available from Club Car for maintenance and service procedures for gasoline, electric, and/or diesel vehicles, both past and present models. Be sure to carefully examine the tool list for applicability to your vehicle before ordering.			
1	101871001	Accelerator Pedal Adjustment Tool		1	1
2	101813202	Adhesive, Guide Ring, 3-Gram Tube			1
3	101641202	Arbor		1	
4	101831901	Battery Discharge Machine, 36/48 Volt			1
5	1014305	Battery Terminal Protector Spray	1	1	1
6	1011767	Battery Thermometer	1	1	1
7	1016417	Bearing and Oil Seal Remover Assembly	1	1	1
8	1016416	Bearing Driver Set	1	1	1
9	1012811	Bearing Puller	1	1	1
10	1012812	Bearing Puller Wedge Attachment	1	1	1
11	1013582	Brake Adjustment Tool (used only on vehicles with manually adjusted mechanical brakes)		1	1
12	102555501	Brake Cable Release Tool	1	1	1
13	102249901	Brake Pedal Adjustment Tool Kit (used for the Carryall Electric Industrial Truck only) (includes items 14 and 15)			1
14	****	Brake Pedal Adjustment Tool			1
15	****	Brake Pedal Tension Tool			1
16	101887101	Calibration Test Module			1
17	101808401	Cam Installation Tool		1	
18	102562401	Charger Bezel Tool			1
19	102686101	Clutch Removal Tool (for 4x4 vehicles)	1	1	
		Please refer to the maintenance and service manual for proper tool application.			
	****	Special order item available upon request			

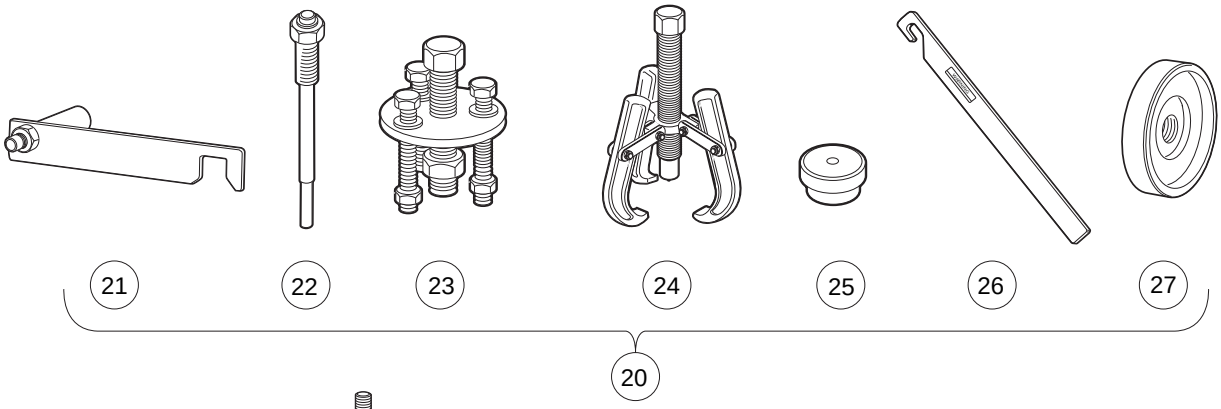
21
22
23
24
25
26
27
20

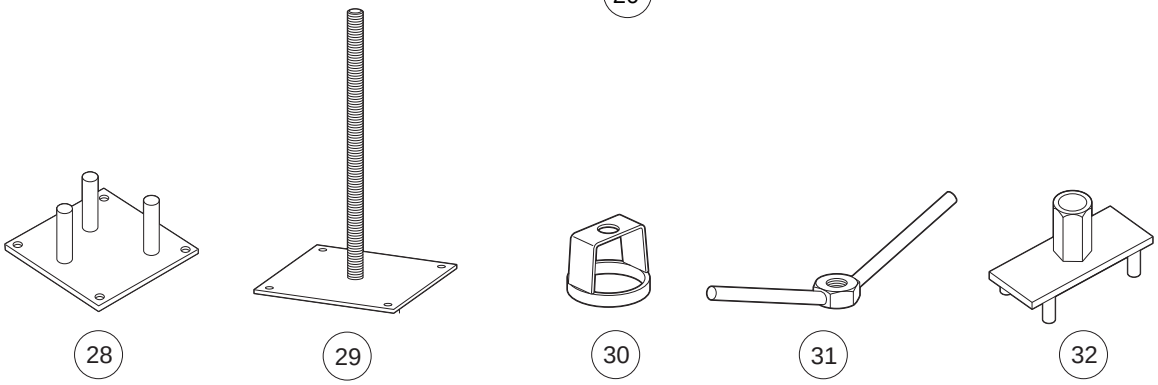
28
29
30
31
32

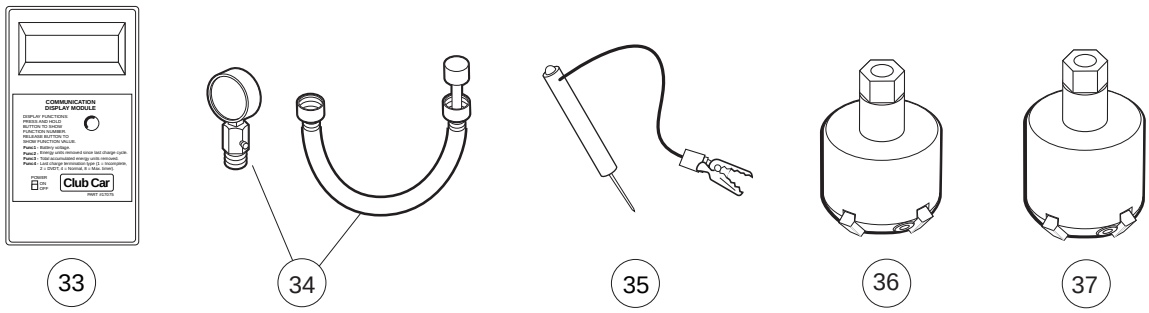
COMMUNICATION
DISPLAY MODULE
Club Car
33
34
35
36
37

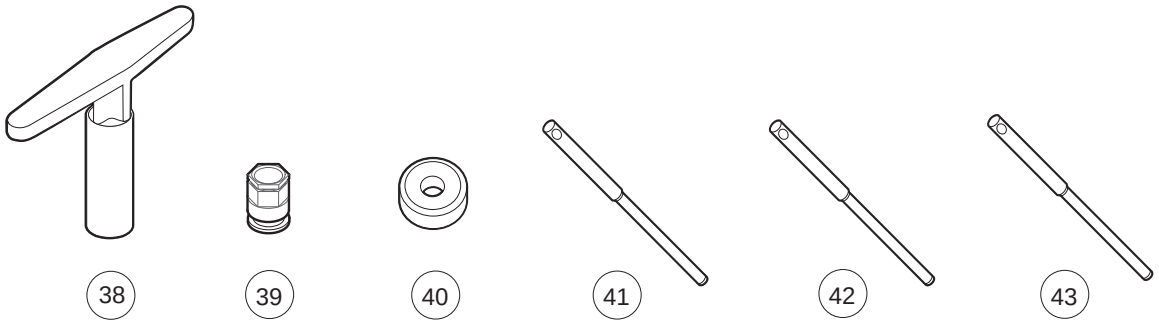
38
39
40
41
42
43

MAINTENANCE AND SERVICE TOOLS, CONTINUED

ITEM	PART NO.	DESCRIPTION	QTY DIESEL	QTY GAS	QTY ELEC
		1 2 3 4			
20	1014510	Clutch Tool Kit (includes items 21 - 27)		1	
21	1014498	Clutch Alignment Tool (for pre-unitized transaxle vehicles built prior to 1997 model year)		1	
22	1014496	Drive Clutch Puller (for Kawasaki engines only)		1	
23	1014497	Drive Clutch Hub Puller (for Kawasaki engines only)		1	
24	1014508	Driven Clutch Cam Puller (for Kawasaki engines only)		1	
25	1014507	Driven Clutch Puller Plug (for Kawasaki engines only)		1	
26	1015524	Drive Clutch Holder Tool Assembly (for Kawasaki engines only)		1	
27	101809101	Press Weldment (for Kawasaki engines only)		1	
28	102601501	Drive ClutchFixed Sheave Tool (for 4x4 vehicles)	1	1	
29	102603501	Driven Clutch Spring Compression Base (for use with items 30 and 31) (for 4x4 vehicles)	1	1	
30	102605201	Driven Clutch Spring Compression Collar (for use with items 29 and 31) (for 4x4 vehicles)	1	1	
31	102606101	Driven Clutch Spring Compression Nut (for use with items 29 and 30) (for 4x4 vehicles)	1	1	
32	102607501	Drive Clutch Spider Removal Tool (for 4x4 vehicles)	1	1	
33	101831801	Communication Display Module			1
34	101641002	Compression Gauge and Adapter		1	
35	1011273	Continuity Tester		1	1
36	102773801	Cutter, Valve Seat, #122		1	
37	102773901	Cutter, Valve Seat #115		1	
38	102774101	Wrench, T, #505		1	
39	102774101	Adapter, T-Wrench		1	
40	102675401	Cutter, Valve Seat, 60 Degree (requires item 51) (for Honda GX620 Gasoline Engines)		1	
41	102774201	Pilot, 6.6 MM		1	
42	102774301	Pilot, 6.62 MM		1	
43	102774401	Pilot, 6.65 MM		1	
		Please refer to the maintenance and service manual for proper tool application.			

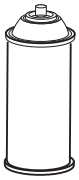

44

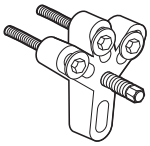

45

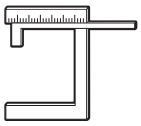

46

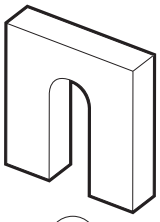

47

48

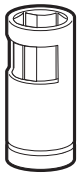

49

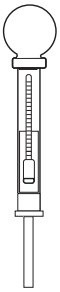

50

51

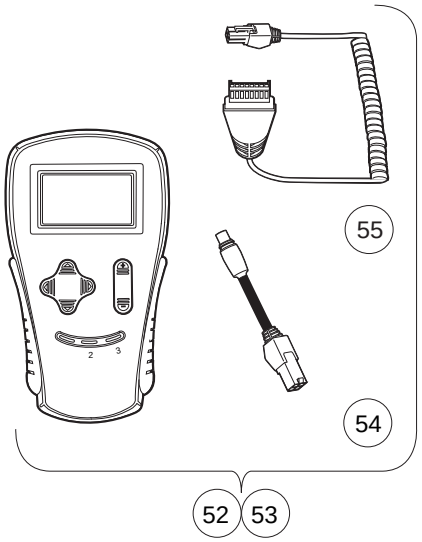

52 53

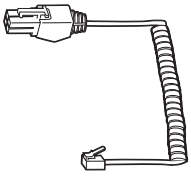

56

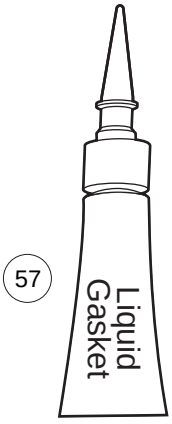

57

58

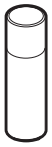

59 60

61

MAINTENANCE AND SERVICE TOOLS, CONTINUED

ITEM	PART NO.	DESCRIPTION	QTY DIESEL	QTY GAS	QTY ELEC
		1 2 3 4			
44	1012151	Dry Moly Lubricant	1	1	1
45	1016627	Flywheel Puller Kit (for Kawasaki Engines)		1	
46	102669901	Gauge, Carburetor Float Level (for Honda GX620 Gasoline Engines)		1	
47	1016418	Gear Yoke	1	1	1
48	101933101	Governor Shaft Installation Tool (for Kawasaki Engine Vehicles)		1	
49	102169401	Hydraulic Brake Adjuster (for Turf/CA 272/472, Pioneer/XRT 1200, Bobcat 2100, HUV 4213)			1
50	1011478	Hydrometer	1	1	1
51	1013593	Internal Retaining Ring Pliers	1	1	1
52	102248803	IQ Display Module (IQDM) Kit (IQ System and IQ Plus vehicles) (includes items 54 and 55)			1
53	102248804	IQ Display Module (IQDM-P) Kit (IQ System and IQ Plus vehicles) (includes items 54 and 55)			1
54	102251501	Adaptor, Cable			1
55	102241502	IQDM Series 2 Cable			1
56	102241501	IQDM Series 1 Cable (replacement)			1
57	101928701	Liquid Gasket (transaxle case)	1	1	1
58	102243402	Moly-Teflon Lubricant (4-oz. (113-gram) tube)			1
59	101997201	Paint, Touch-Up – Beige*		1	1
59	101997207	Paint, Touch-Up – Black*		1	1
59	101997212	Paint, Touch-Up – Burgundy*		1	1
59	101997211	Paint, Touch-Up – Classic Blue (Navy)*		1	1
59	101997205	Paint, Touch-Up – Dark Gray*	1	1	1
59	101997209	Paint, Touch-Up – Dark Green*	1	1	1
59	101997204	Paint, Touch-Up – Gray*	1	1	1
59	101997203	Paint, Touch-Up – Red*	1	1	1
59	101997206	Paint, Touch-Up – Royal Blue (Pacific Blue)*		1	1
59	101997202	Paint, Touch-Up – White*	1	1	1
60	102562301	Paint, Precedent Underbody – Gray		1	1
61	102587201	Paint Pen, Touch-Up, Precedent Underbody – Black		1	1

Please refer to the maintenance and service manual for proper tool application.

* Item 59 is not for use on Surlyn® body material, which is used on Precedent vehicles.

62

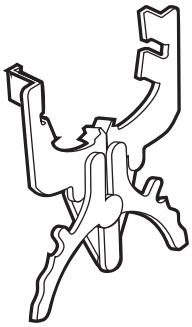

63

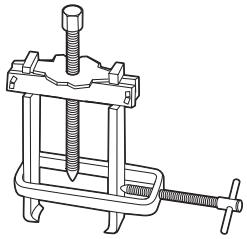

64

65

66

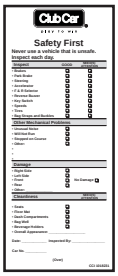

67

68

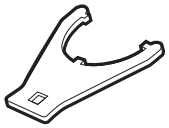

69

70

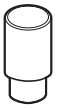

71

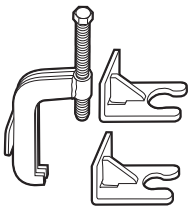

72

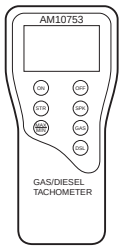

73

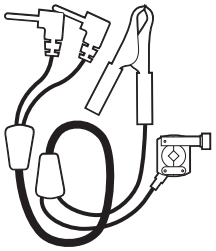

74

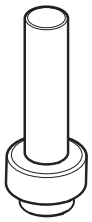

75

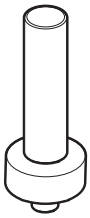

76

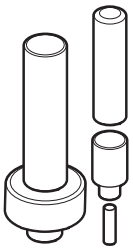

77

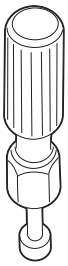

83

84

85

86

MAINTENANCE AND SERVICE TOOLS, CONTINUED

ITEM	PART NO.	DESCRIPTION	QTY DIESEL	QTY GAS	QTY ELEC
		1 2 3 4			
62	1016414	Piston Ring Compressor Kit (FE290, FE350 and FE400 engines)		1	
63	1016415	Piston Ring Pliers (for Kawasaki Engines)		1	
64	102668801	Puller, Special Use (for Kubota D722 Diesel Engines)	1		
65	1012549	Retaining Ring Pliers, 45° External	1	1	1
66	1012560	Retaining Ring Pliers, 90° Internal	1	1	1
67	101823101	Safety First Card (50 per pack)	1	1	1
68	1012809	Seal Puller	1	1	1
69	102330901	Spanner Wrench (for coil over shock front suspension vehicles only)	1	1	
70	1014264	Steering Column Bearing Press Tool		1	1
71	1014259	Steering Column Retaining Ring Tool		1	1
72	102061201	Steering Wheel Puller Tool	1	1	1
73	AM10753	Tachometer (includes gasoline engine pick up lead only)	1	1	
74	AM10771	Tachometer Diesel Probe (for use with item 73)	1		
75	1014162	Transaxle Axle Seal Tool		1	
76	1014161	Transaxle Pinion Seal Tool		1	
77	1014115	Transmission Tool Kit		1	
78	101611003	Tune-Up Kit, All OHV (for FE290, FE350, FE400 only) (includes air filter, spark plug, oil filter, fuel filters) (not shown)		1	
79	AM11804	Tune-Up Kit, Gx620 (for Honda Engines) (includes air filter, spark plug, oil filter, fuel filters) (not shown)		1	
80	AM11805	Tune-Up Kit, D722 (for Kubota Engines) (includes air filter, oil filter, fuel filters, water separator filter) (not shown)	1		
81	AM1220301	Tune-Up Kit, Precedent (for FE290/350 Engines) (includes air filter, spark plug, oil filter, fuel filters) (not shown)		1	
82	AM1232401	Tune-Up Kit, FH680D (for Kawasaki V-Twin Engines) (includes oil filter, fuel filter, air filter, and spark plugs) (not shown)		1	
83	1016413	Valve Clearance Adjuster Screw Holder (for FE290 engines only)		1	
84	102674601	Valve Guide Driver (for Honda GX620 Gasoline Engines)		1	
85	101641201	Valve Guide Reamer (FE290, FE350, and FE400 only)		1	
86	102674401	Valve Guide Reamer, 6.6 mm (for Honda GX620 Gasoline Engines)		1	

87

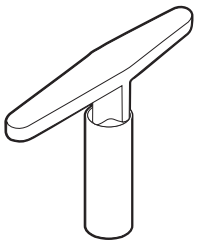

88

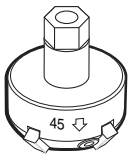

89

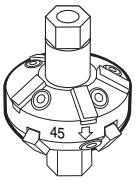

90

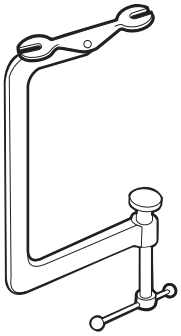

91

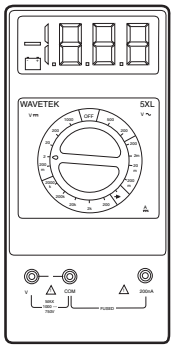

92

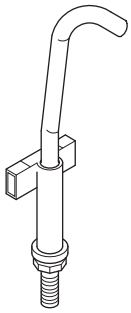

93

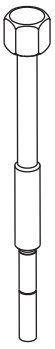

94

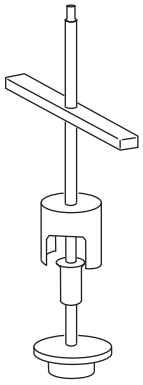

95

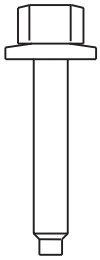

96

MAINTENANCE AND SERVICE TOOLS, CONTINUED

ITEM	PART NO.	DESCRIPTION	QTY DIESEL	QTY GAS	QTY ELEC
		1 2 3 4			
87	1016552	Valve Seat Cutter Guide		1	
88	1016551	Valve Seat Cutter T-Wrench		1	
89	1016553	Valve Seat Cutter, 45° (32 mm diameter) (for FE290 engines only)		1	
90	1016554	Valve Seat Cutter, 45°/30° (35 mm diameter)		1	
91	101641101	Valve Spring Compressor		1	
92	1011480	Volt Ohm Meter	1	1	1
93	102570401	Tool, Tensioning, Starter Generator (For Precedent vehicles)		1	
94	103601401	Puller, Drive Clutch, XRT 950*		1	
95	103601701	Tool, Disassembly, Driven Clutch, XRT 950		1	
96	103600501	Screw, Driven Clutch Disassembly, M6, XRT 950		1	
		*Note: The XRT 950 Drive Clutch Puller requires the use of Screw, Driven Clutch Disassembly, CCI Part Number 103600501.			

INDEX

Part Number and *Page*

AM10753 *16-9*
AM10771 *16-9*
AM10080 *11-5*
AM10081 *11-5*
AM10419 *10-7*
AM10724 *7-5*
183 *6-11*, *6-15*, *6-17*, *8-17*, *8-19*, *10-3*, *11-3*
304 *1-29*, *6-11*, *11-11*, *11-13*, *12-13*, *12-15*
320 *4-11*, *4-13*
332 *1-11*, *1-13*, *1-15*, *1-17*, *1-19*, *1-25*, *1-27*, *1-29*, *1-33*, *1-39*, *6-11*, *6-29*, *8-15*, *9-3*, *12-13*, *12-15*
334 *4-19*, *4-21*, *5-3*, *5-7*, *7-15*
357 *5-11*, *5-15*, *5-23*
451 *1-27*, *1-29*, *4-3*, *4-7*, *9-3*, *13-3*
705 *6-25*, *7-15*
706 *5-11*, *5-15*
808 *5-23*, *10-3*
1016 *6-11*, *6-15*, *6-17*
1017 *6-13*, *6-15*, *6-17*, *12-7*
1028 *4-5*
1032 *4-5*
1035 *5-7*, *5-9*, *5-13*
1218 *1-29*, *1-39*
1241 *1-3*, *1-25*, *1-27*, *1-29*, *1-39*, *4-5*, *4-15*, *4-17*, *4-19*, *4-21*, *6-15*, *6-17*, *6-21*, *6-25*, *6-27*, *9-3*, *11-11*, *11-13*, *12-19*
1242 *4-9*, *4-15*, *4-17*, *5-23*, *6-15*, *6-17*, *6-25*
1308 *5-9*, *5-13*
1624 *4-19*, *4-21*, *5-7*
1631 *8-17*, *8-19*
2402 *5-9*, *5-13*, *5-15*
4029 *6-11*, *12-13*, *12-15*
7048 *5-17*
7173 *5-23*, *6-21*, *6-27*, *11-11*, *11-13*, *12-19*
7174 *5-3*, *5-23*, *6-25*, *8-13*, *9-3*, *13-3*
7251 *1-3*
7310 *2-3*, *2-5*
7311 *5-23*
7330 *11-7*, *14-3*
7335 *11-5*, *14-3*
7336 *14-3*
7410 *1-39*
7473 *1-3*, *1-25*, *1-27*, *1-29*, *1-39*, *4-5*, *4-9*, *4-15*, *4-17*, *4-19*, *4-21*, *6-15*, *6-17*, *6-21*, *6-27*, *12-19*
7539 *5-9*, *5-13*
7540 *5-7*, *5-9*, *5-13*
7555 *5-7*, *5-9*, *5-13*
7577 *15-3*, *15-5*, *15-7*
7591 *6-11*, *6-31*, *12-13*, *12-15*
7602 *5-7*, *5-9*, *5-13*
7716 *4-5*, *4-19*, *4-21*
7818 *6-15*, *6-17*
7820 *6-11*, *12-13*, *12-15*
7840 *5-17*
7847 *1-7*, *1-33*, *9-3*, *15-7*
7893 *6-11*, *6-15*, *6-17*, *11-11*, *11-13*
7910 *5-17*
7973 *1-5*, *8-17*, *8-19*
8028 *1-25*
8056 *6-11*, *6-31*, *12-13*, *12-15*, *12-35*
8057 *6-11*, *6-15*, *6-17*, *6-31*, *11-9*, *12-13*, *12-15*, *12-35*
8058 *6-11*, *6-15*, *6-17*, *6-31*, *11-9*, *12-13*, *12-15*, *12-35*
8067 *5-17*
8104 *11-9*
8233 *1-11*, *1-13*, *1-15*, *1-17*, *1-19*, *1-27*, *1-33*, *1-39*, *4-19*, *4-21*, *5-23*, *6-11*, *6-29*, *8-5*, *11-3*, *11-11*, *11-13*, *12-13*, *12-15*, *15-7*
8248 *6-29*, *8-5*
8251 *1-11*, *1-13*, *1-15*, *1-17*, *1-19*, *1-25*, *1-31*, *1-33*
8304 *1-25*
8450 *6-15*, *6-17*, *10-3*
8639 *6-11*, *8-17*, *8-19*, *11-11*, *11-13*, *12-5*, *12-11*, *12-13*, *12-15*
8717 *4-19*, *4-21*, *6-15*, *6-17*, *11-3*, *11-9*
8745 *5-11*, *5-15*
8754 *4-11*, *4-13*, *4-19*, *4-21*, *5-3*, *5-7*, *5-9*, *5-11*, *5-13*, *5-15*, *5-19*, *5-21*, *6-25*
8755 *5-11*, *5-15*, *5-19*
8797 *8-7*
8861 *5-9*, *5-13*, *5-23*
8963 *1-25*
8990 *5-7*, *6-15*, *6-17*, *12-25*, *12-27*, *12-29*
1010005 *5-17*
1010028 *11-9*
1010124 *5-11*, *5-15*
1010138 *5-9*, *5-13*
1010145 *5-19*, *5-21*
1010150 *5-11*, *5-15*
1010177 *5-11*
1010219 *5-9*, *5-13*
1010434 *1-3*, *1-13*, *1-15*, *1-17*, *1-19*, *1-33*, *1-39*, *8-3*
1010435 *1-3*, *1-39*
1010436 *1-25*
1010543 *1-9*, *1-21*, *1-23*, *1-25*
1010577 *1-27*, *7-15*
1010805 *4-5*
1010829 *4-9*, *4-15*, *4-17*
1010850 *4-3*, *4-7*
1010877 *4-5*
1010878 *4-5*
101090801 *12-33*, *12-37*, *12-39*, *12-41*
1010909 *6-11*
1010921 *4-5*
1010927 *4-5*
1010932 *4-5*
1010933 *4-5*
1010934 *6-27*, *13-3*
1010954 *6-15*, *6-17*
1010984 *2-3*, *2-5*
1010993 *1-15*, *1-19*, *1-33*
1011014 *1-3*
1011017 *1-3*
1011084 *4-23*, *4-25*
1011114 *4-3*, *4-7*
1011137 *4-7*
1011210 *1-25*
1011219 *1-25*
1011220 *1-25*
1011221 *1-25*
1011222 *1-25*
1011229 *6-11*, *6-31*, *12-13*, *12-15*, *12-35*
1011273 *16-5*
1011280 *6-21*, *12-19*
1011291 *11-7*
1011303 *4-3*, *4-7*
1011393 *5-17*
1011394 *1-3*
1011402 *4-5*
1011415 *5-19*, *5-21*
1011418 *4-5*
1011439 *6-21*, *12-19*
101146302 *4-3*, *4-7*
1011464 *4-3*, *4-7*
1011465 *4-3*, *4-7*
1011466 *4-3*, *4-7*
1011467 *4-3*, *4-7*
1011478 *16-7*
1011480 *16-11*
1011497 *6-31*
1011498 *6-31*
1011557 *6-21*, *6-31*, *12-19*
1011558 *6-31*
1011571 *6-31*
1011578 *1-25*, *5-3*, *12-33*, *12-37*, *12-39*, *12-41*
1011582 *6-31*
1011610 *6-31*
1011652 *1-9*, *1-21*, *1-23*
1011694 *4-19*, *4-21*
1011697 *5-3*, *7-15*, *8-13*
1011700 *4-19*, *4-21*
1011734 *4-23*, *4-25*
1011767 *16-3*
1011779 *4-9*, *4-15*, *4-17*
1011825 *6-11*, *12-13*, *12-15*
1011843 *6-31*
101187702 *4-5*
1011887 *5-17*
1011892 *5-17*
1011930 *5-7*, *5-9*, *5-13*
1011931 *4-19*, *4-21*
1011988 *1-39*, *8-5*
1012098 *15-3*, *15-5*, *15-7*
1012101 *15-3*, *15-5*, *15-7*

INDEX

1012126 *12-31*
1012151 *16-7*
1012180 *5-19*
1012181 *5-21*
1012182 *5-21*
1012285 *1-11*, *1-27*, *8-13*
1012295 *6-15*, *6-17*
1012303 *5-11*, *5-15*, *5-19*, *5-21*
1012304 *5-19*
1012328 *6-27*
1012333 *11-11*, *11-13*
1012412 *1-13*, *1-15*, *1-17*, *1-19*, *1-33*
1012431 *6-11*, *6-15*, *6-17*, *6-31*, *12-13*, *12-15*, *12-35*
1012438 *8-17*, *8-19*
1012466 *5-3*
1012467 *5-7*
1012505 *6-19*, *12-17*
1012528 *9-3*, *12-25*, *12-27*
1012549 *16-9*
1012560 *16-9*
1012571 *7-15*
1012581 *1-13*, *1-15*, *1-17*, *1-19*, *1-31*
1012597 *1-21*, *1-23*
1012604 *5-3*
1012605 *5-3*
1012649 *8-5*
1012656 *1-21*, *1-23*
1012657 *1-21*, *1-23*
1012711 *11-3*
1012714 *11-5*
1012740 *11-5*
1012741 *11-5*
1012747 *11-5*
1012748 *11-5*
1012752 *11-3*
1012809 *16-9*
1012811 *16-3*
1012812 *16-3*
1012830 *6-25*, *8-13*, *9-3*
1012836 *10-7*
1012896 *11-3*
1013001 *6-23*
1013003 *6-23*
1013005 *6-23*
101301102 *6-23*
1013035 *5-7*
1013042 *5-7*
1013044 *5-7*
1013051 *5-7*
1013052 *5-7*
1013061 *11-3*, *11-9*, *12-23*, *12-31*
1013135 *5-17*
1013207 *5-19*
1013216 *1-31*
1013218 *1-31*
1013312 *1-9*
1013343 *1-5*
1013344 *1-5*
1013357 *1-37*, *6-11*, *12-13*, *12-15*, *12-29*
1013461 *6-13*, *8-7*, *12-7*
1013462 *8-7*
1013494 *6-19*, *12-17*
1013531 *4-15*, *4-17*
1013582 *16-3*
1013589 *6-15*, *6-17*
1013593 *16-7*
1013609 *6-15*, *6-17*
1013677 *3-5*
1013687 *8-5*
1013700 *8-13*
1013734 *9-3*, *12-25*, *12-27*
1013746 *8-5*, *8-7*, *8-11*
1013760 *11-3*
1013768 *11-7*
1013769 *11-7*
1013770 *11-7*
1013771 *11-7*
1013772 *11-7*
1013773 *11-7*
1013774 *11-7*
1013787 *11-7*
1013792 *11-7*
1013794 *11-7*, *14-3*
1013861 *5-3*
1013869 *4-5*
1013870 *4-5*
1013871 *4-19*, *4-21*
1013876 *4-5*
1013924 *4-3*, *4-7*, *7-15*
1014007 *1-25*, *4-19*, *4-21*, *11-3*
1014049 *10-3*
1014050 *10-3*
1014052 *10-3*
1014055 *10-3*
1014056 *10-3*
1014057 *10-3*
1014058 *10-3*
1014059 *10-3*
1014062 *10-3*
1014063 *10-3*
1014065 *6-15*, *6-17*, *10-3*
1014070 *10-7*
1014072 *10-7*
1014078 *10-7*
1014080 *10-7*
1014115 *16-9*
1014116 *8-5*
1014119 *6-15*, *6-17*
1014125 *5-3*
1014126 *5-3*
1014145 *6-15*, *6-17*
1014153 *4-3*, *4-7*
1014161 *16-9*
1014162 *16-9*
1014198 *3-15*
1014201 *13-3*
1014207 *11-7*
1014211 *5-3*
1014212 *5-3*
1014213 *5-3*
1014214 *5-3*
1014216 *5-3*
1014217 *5-3*
1014259 *16-9*
1014264 *16-9*
1014276 *5-11*, *5-15*
1014287 *10-3*
1014288 *5-3*, *6-27*, *10-3*
1014289 *6-23*
1014305 *16-3*
1014306 *1-11*, *1-33*
1014375 *6-27*
1014392 *1-33*
1014453 *10-3*
1014454 *10-7*
1014496 *16-5*
1014497 *16-5*
1014498 *16-5*
1014507 *16-5*
1014508 *16-5*
1014510 *16-5*
1014523 *8-5*
1014524 *8-5*
1014555 *5-19*, *5-21*
1014771 *2-3*
1014807 *6-15*, *6-17*, *11-9*
1014808 *11-9*
1014902 *5-21*
1014928 *8-5*
1014948 *6-15*, *6-17*
101503202 *1-5*
1015072 *12-33*, *12-37*, *12-39*, *12-41*
1015075 *1-3*
1015091 *1-25*
1015137 *8-5*, *8-7*, *8-11*
1015139 *8-7*, *8-17*, *8-19*
1015143 *8-7*
101524002 *6-25*
1015332 *7-3*
1015345 *6-15*, *6-17*
1015372 *6-15*, *6-17*
1015373 *6-15*, *6-17*
1015405 *6-15*, *6-17*
1015426 *8-15*
1015453 *5-23*
1015457 *5-23*
101547601 *3-7*, *3-13*

INDEX

1015524 *16-5*
1015525 *1-31*
1015528 *6-19*, *12-17*
1015583 *5-11*, *5-15*, *5-19*, *5-21*
1015597 *5-7*, *5-9*, *5-13*, *5-17*
1015613 *5-23*
1015614 *5-23*
101562711 *1-9*, *1-21*, *1-25*
101562712 *1-9*, *1-21*, *1-25*
101562714 *1-9*, *1-23*, *1-25*
101562715 *1-9*, *1-23*, *1-25*
101564804 *1-25*
101564805 *1-25*
101564807 *1-25*
101564808 *1-25*
1015649 *7-3*
101570506 *2-3*
101570507 *2-3*
101570509 *2-5*
101570514 *2-3*
1015707 *2-3*
1015737 *6-15*, *6-17*
1015741 *6-15*, *6-17*
1015752 *6-15*, *6-17*, *8-15*, *12-21*
1015760 *5-23*
1015814 *9-3*
101584502 *8-13*
1015878 *6-15*, *6-17*, *11-9*
1015902 *1-11*, *1-27*
1015917 *15-3*, *15-7*
1015932 *6-25*
1015969 *7-3*
1016004 *8-7*
1016074 *6-25*
101611003 *16-9*
101615504 *5-5*
1016156 *5-5*
1016183 *5-3*
1016201 *10-3*
1016269 *5-3*
1016289 *10-3*
1016337 *11-5*
1016338 *11-5*
1016346 *5-9*, *5-13*
1016349 *5-9*, *5-13*
1016350 *5-9*, *5-13*
1016353 *5-9*, *5-13*
1016356 *6-11*, *12-13*, *12-15*, *12-29*
1016384 *5-11*, *5-15*
1016385 *5-9*, *5-13*
1016386 *5-11*, *5-15*
1016387 *5-11*, *5-15*
1016389 *5-11*, *5-15*
101641002 *16-5*
101641101 *16-11*
101641201 *16-9*
101641202 *16-3*
1016413 *16-9*
1016414 *16-9*
1016415 *16-9*
1016416 *16-3*
1016417 *16-3*
1016418 *16-7*
1016423 *6-15*, *6-17*
101642575 *8-9*
101642578 *8-9*
101642580 *8-9*
101642582 *8-9*
101642585 *8-9*
1016429 *7-7*
1016432 *7-7*, *11-3*
1016436 *7-9*
1016437 *8-9*
1016438 *8-11*
1016440 *7-9*, *8-11*
1016441 *8-11*
1016444 *8-11*
1016445 *7-5*
1016449 *7-9*
1016450 *7-9*
1016452 *7-9*
1016454 *7-11*
1016455 *7-5*
1016456 *7-3*, *7-5*
1016457 *7-7*
1016458 *7-9*
1016467 *7-7*
1016470 *7-13*
1016472 *7-11*
1016473 *7-7*
1016474 *7-9*
1016479 *7-9*
1016480 *8-11*
101648102 *8-11*
101648203 *7-7*
1016483 *7-9*
1016486 *8-9*
1016489 *7-9*
101649002 *8-11*
1016494 *7-11*
1016496 *7-11*
1016497 *7-5*
1016499 *8-9*
1016501 *8-9*
1016502 *7-7*
1016506 *7-11*
1016507 *7-3*
1016510 *7-11*
1016513 *11-3*
101651406 *2-3*
101651407 *2-3*
101651409 *2-5*
101651414 *2-3*
1016517 *7-9*
1016518 *7-9*
1016519 *7-9*
1016521 *7-11*
1016531 *7-3*
1016535 *7-11*
1016537 *7-7*
1016538 *7-11*
1016539 *7-3*
1016541 *7-13*
1016544 *7-5*, *7-9*, *7-11*
1016546 *8-13*
1016547 *7-3*, *7-13*, *8-11*
1016549 *7-9*
1016551 *16-11*
1016552 *16-11*
1016553 *16-11*
1016554 *16-11*
1016557 *4-3*, *4-7*
1016560 *7-9*
1016561 *7-5*
1016562 *7-5*, *7-13*
1016563 *7-9*
1016564 *7-11*
1016566 *7-9*
1016569 *7-9*
1016570 *7-7*
1016571 *7-13*
1016572 *8-11*
1016573 *4-3*, *4-7*
1016576 *7-7*
1016578 *7-5*
1016579 *7-5*
1016581 *7-7*
1016582 *8-11*
1016583 *7-9*
1016584 *7-11*
1016585 *8-9*
1016586 *7-5*
1016587 *7-5*
1016588 *7-5*
101661601 *12-33*, *12-39*
101661602 *12-33*, *12-39*
1016627 *16-7*
1016630 *6-19*
1016663 *5-5*
1016668 *1-39*
1016672 *11-7*
101674702 *4-23*
101674704 *4-25*
1016751 *1-11*, *1-27*, *1-29*
101675511 *1-11*, *1-27*, *1-29*
101675512 *1-11*, *1-27*, *1-29*
101675514 *1-11*, *1-27*, *1-29*
101675515 *1-11*, *1-27*, *1-29*

INDEX

101677701 *1-11*, *1-27*, *1-29*
101677702 *1-11*, *1-27*, *1-29*
101677703 *1-11*, *1-27*, *1-29*
101677705 *1-11*, *1-27*, *1-29*
1016801 *10-3*
1016813 *5-23*
1016814 *5-23*
1016835 *1-39*
1016842 *1-39*
1016849 *6-11*, *6-19*, *6-31*, *12-13*, *12-15*, *12-17*, *12-35*
1016851 *6-11*, *6-19*, *6-31*, *12-13*, *12-15*, *12-17*, *12-35*
1016859 *6-11*, *6-31*, *12-13*, *12-15*, *12-35*
1016868 *1-3*
1016879 *6-13*, *12-7*
1016880 *6-13*, *12-7*
1016883 *6-25*
1016901 *10-3*
1016904 *7-9*, *9-3*
1016916 *1-25*
101692501 *1-3*
101692502 *1-3*
101692506 *1-3*
101692509 *1-3*
101692510 *1-3*
101692511 *1-3*
101692512 *1-3*
101692513 *1-3*
101692514 *1-3*
101693201 *3-7*, *3-13*
101693901 *1-3*
101693902 *1-3*
101693906 *1-3*
101693908 *1-3*
101693909 *1-3*
101693910 *1-3*
101693911 *1-3*
101693912 *1-3*
101693913 *1-3*
1016952 *1-7*
1016967 *1-3*, *12-29*
1016997 *6-15*, *6-17*
1017029 *4-5*
1017035 *6-31*
101705701 *3-3*, *3-9*
1017062 *6-13*, *12-7*
1017064 *6-13*, *12-7*
1017065 *6-13*, *12-7*
1017080 *1-3*
1017082 *11-3*
101708301 *1-7*
1017141 *1-33*
1017188 *10-5*
1017203 *8-5*
1017211 *4-9*
1017226 *5-3*
1017231 *11-3*
1017239 *6-15*, *6-17*
1017243 *6-15*, *6-17*
1017259 *1-11*
1017266 *5-9*, *5-13*
1017273 *5-5*
101728201 *1-9*
101728202 *1-21*
101728203 *1-9*
101728204 *1-21*
101728210 *1-9*
101728211 *1-23*
101728213 *1-9*
101728214 *1-23*
101728701 *1-33*
101728702 *1-33*
101728704 *1-33*
101728706 *1-33*
101728708 *1-33*
101728709 *1-33*
101728711 *1-33*
101728712 *1-33*
1017289 *1-13*, *1-15*, *1-17*, *1-19*
1017310 *1-11*, *1-27*
1017313 *5-3*
1017314 *5-3*
1017315 *5-3*
101731601 *1-13*
101731602 *1-13*
101731604 *1-13*
101731606 *1-13*
101731608 *1-13*
101731609 *1-13*
101731611 *1-13*
101731612 *1-13*
1017317 *5-3*
101737002 *2-3*
1017378 *4-19*, *4-21*
1017380 *4-19*, *4-21*
101738302 *10-3*
1017384 *1-21*, *1-23*
1017424 *4-19*, *4-21*
1017434 *7-9*
1017435 *7-9*
1017442 *7-7*
1017443 *7-9*, *7-11*
1017444 *7-9*
1017445 *7-9*
1017446 *7-9*
1017447 *7-11*
1017448 *7-5*
101744901 *7-13*
101744902 *7-13*
1017450 *7-13*
101745101 *7-13*
101745102 *7-13*
1017453 *7-13*
1017454 *7-9*
1017455 *7-5*
1017456 *7-7*
101745701 *7-13*
101745702 *7-13*
1017458 *7-7*
1017460 *7-7*
1017461 *8-9*
1017463 *7-5*
1017466 *8-11*
1017468 *7-5*
1017471 *7-13*
1017472 *7-11*
1017473 *7-9*
1017474 *7-3*
1017475 *7-3*
1017476 *7-3*
1017486 *7-3*
1017487 *7-11*
1017490 *7-5*
1017500 *7-3*
1017501 *7-13*
1017502 *7-13*
1017503 *7-13*
1017504 *7-11*
1017507 *7-7*
1017508 *7-11*
1017510 *7-13*
1017511 *7-11*
1017512 *7-13*
1017513 *7-11*
1017514 *7-11*
101751801 *7-11*
101751802 *7-11*
101751803 *7-11*
1017686 *10-7*
1017689 *9-3*
101769302 *2-3*
1017695 *1-9*, *1-21*, *1-23*
1017696 *4-19*, *4-21*
1017699 *6-31*
1017705 *12-23*
1017721 *6-11*
101773301 *7-13*
101773302 *7-13*
101773303 *7-13*
101773304 *7-13*
101773305 *7-13*
101773306 *7-13*
101773307 *7-13*
101773308 *7-13*
101773309 *7-13*
101773310 *7-13*
101773311 *7-13*

INDEX

1017748 *1-33*
1017774 *1-27*, *1-29*
1017853 *6-11*, *12-13*, *12-15*
101788201 *1-17*
101788202 *1-17*
101788204 *1-17*
101788206 *1-17*
101788209 *1-17*
101788210 *1-17*
101788211 *1-17*
101788212 *1-17*
101791101 *4-3*
101791901 *1-17*, *1-19*
1017936 *1-33*
101796201 *4-19*, *4-21*
101796501 *12-23*
101796801 *12-23*
101799201 *1-27*
101801001 *12-23*
101804301 *6-19*, *8-15*, *8-17*, *8-19*
101806901 *1-35*
101808401 *16-3*
101809101 *16-5*
101811301 *8-17*, *8-19*
101811901 *8-15*
101812301 *8-15*
101813001 *8-15*
101813202 *16-3*
101817401 *4-19*, *4-21*
101818801 *4-19*
101821501 *8-15*
101823101 *16-9*
101824401 *8-5*, *8-7*
101825101 *3-5*, *3-11*, *12-17*
101825102 *3-7*, *3-13*, *6-19*
101825701 *8-17*, *8-19*
101826201 *12-17*
101826401 *6-19*
101827101 *7-15*
101828501 *15-3*, *15-7*
101828801 *15-3*
101828802 *15-3*
101828901 *15-3*, *15-5*
101828902 *15-3*, *15-5*
101828903 *15-3*, *15-5*
101829001 *15-7*
101830601 *6-19*, *12-17*
101830701 *6-19*, *12-17*
101831101 *15-3*, *15-7*
101831401 *12-33*, *12-37*, *12-39*, *12-41*
101831801 *16-5*
101831901 *16-3*
101832001 *12-23*
101832202 *8-13*
101832302 *8-13*
101832601 *7-15*
101832701 *7-15*
101833101 *7-15*
101833401 *10-7*
101833601 *11-3*
101833701 *6-23*
101833904 *10-3*
101834001 *10-7*
101834502 *6-19*, *12-17*
101834601 *7-15*
101834801 *11-3*
101836201 *10-7*
101837001 *1-37*
101837101 *8-15*
101837301 *6-25*
101838401 *15-5*, *15-7*
101838601 *15-5*, *15-7*
101840901 *1-39*
101841101 *1-39*
101841201 *1-39*
101841202 *1-39*
101841301 *1-39*
101841901 *15-7*
101851101 *6-19*, *12-17*
101856002 *12-17*
101856102 *6-15*, *6-17*
101859401 *9-3*
101861901 *4-19*, *4-21*
101862001 *4-21*
101865301 *4-9*
101869302 *6-23*
101870401 *1-3*
101870501 *5-11*, *5-15*
101871001 *16-3*
101874601 *4-9*
101874901 *6-23*
101875001 *6-23*
101875102 *6-23*
101875201 *6-23*
101875301 *6-23*
101875401 *6-23*
101875501 *6-23*
101875601 *6-23*
101875701 *6-23*
101875802 *6-23*
101876001 *6-23*
101876202 *6-23*
101876301 *6-23*
101876402 *6-23*
101876501 *6-23*
101876901 *5-17*
101877001 *5-17*
101877601 *6-23*
101877701 *6-23*
101878101 *6-23*
101878302 *5-7*
101879001 *6-23*
101879401 *5-7*
101879501 *5-7*
101879601 *5-7*
101879701 *5-7*
101879801 *5-7*
101879901 *5-7*
101880001 *5-7*
101880101 *5-7*
101880201 *5-7*
101880301 *5-7*
101880901 *1-9*, *1-21*, *1-23*
101881101 *7-5*
101881701 *1-9*, *1-21*, *1-23*, *8-15*
101884801 *7-15*
101884901 *2-5*
101886101 *11-3*
101887101 *16-3*
101887601 *7-3*
101889401 *11-5*
101890001 *11-5*
101890101 *11-3*
101890201 *11-3*
101890501 *11-3*
101890601 *11-3*
101890901 *11-7*
101891001 *11-7*
101891301 *11-3*
101891401 *11-7*
101891501 *11-7*
101891601 *11-5*
101891901 *11-5*
101892001 *11-5*
101892201 *11-5*
101892301 *11-5*
101892401 *11-5*
101892501 *11-5*
101892601 *11-5*
101892701 *11-7*
101892901 *11-3*
101893201 *11-5*
101893801 *11-3*
101893901 *11-5*
101894901 *12-23*
101895401 *14-3*
101895501 *14-3*
101896501 *6-23*
101896901 *8-7*
101897001 *14-3*
101897201 *14-3*
101897401 *14-3*
101897601 *14-3*
101898001 *6-27*
101903101 *5-11*, *5-15*
101903601 *14-3*
101903701 *14-3*
101905901 *8-9*

INDEX

101906901 *14-3*
101908101 *12-31*
101908401 *6-29*, *12-31*
101909201 *7-5*
101909301 *7-5*
101909401 *7-5*
101910401 *1-27*, *1-29*
101910501 *11-7*
101914401 *6-11*, *12-13*, *12-15*, *15-3*, *15-5*, *15-7*
101915201 *3-7*, *3-13*
101916001 *7-13*
101916101 *7-3*
101916201 *7-5*
101916301 *7-5*
101916701 *6-25*, *10-3*
101917601 *8-15*
101918401 *2-5*
101918402 *2-3*
101920101 *12-21*
101921501 *8-15*
101922101 *14-3*
101922201 *14-3*
101922501 *6-29*
101923001 *14-3*
101923201 *14-3*
101923501 *14-3*
101923701 *14-3*
101923901 *14-3*
101925701 *8-15*
101926501 *5-19*
101926802 *8-17*
101926803 *8-19*
101926901 *11-3*
101927101 *11-3*
101927201 *11-3*
101927301 *11-3*
101927501 *11-5*
101927601 *11-5*
101927701 *11-5*
101927901 *11-5*
101928001 *11-5*
101928101 *11-5*
101928301 *11-7*
101928601 *11-3*
101928701 *11-3*, *14-3*, *16-7*
101929401 *5-19*
101932201 *6-21*, *12-19*
101933101 *16-7*
101933701 *8-17*, *8-19*
101935301 *4-11*, *4-13*
101936801 *12-21*
101939901 *6-23*
101942301 *13-3*
101946201 *1-11*
101953103 *4-15*
101953104 *4-17*
101953106 *4-9*
101953801 *7-3*
101954301 *1-9*, *1-21*, *1-23*, *1-27*
101955001 *5-9*, *5-13*
101955101 *6-11*, *12-13*, *12-15*
101955301 *8-5*
101957101 *6-21*, *12-19*
101958201 *15-5*
101958301 *15-5*
101960501 *3-7*, *3-13*
101963401 *7-15*, *11-11*, *11-13*
101969701 *6-21*, *12-19*
101971301 *8-15*
101972001 *16-7*
101972002 *16-7*
101972003 *16-7*
101972004 *16-7*
101972005 *16-7*
101972006 *16-7*
101972007 *16-7*
101972009 *16-7*
101972011 *16-7*
101972012 *16-7*
101972101 *14-3*
101972201 *14-3*
101972801 *8-15*
101973101 *8-9*
101973301 *8-9*
101973401 *8-11*
101973501 *15-5*
101976601 *15-5*
101980801 *11-5*
101980901 *11-5*
101981001 *11-5*
101984801 *5-3*
101987701 *8-5*
101987901 *6-13*, *12-7*
101988001 *6-13*, *12-7*
101988002 *6-13*, *12-7*
101988101 *6-13*, *12-7*
101988201 *6-13*, *12-7*
101990801 *4-15*, *4-17*
102002801 *12-33*, *12-37*, *12-39*, *12-41*
102002901 *12-33*, *12-37*, *12-39*, *12-41*
102003201 *8-5*
102004001 *5-11*
102025401 *4-11*, *4-13*
102026001 *4-19*, *4-21*
102031901 *11-7*
102061201 *16-9*
102065901 *7-15*
102066201 *5-21*
102101001 *12-21*
102101101 *12-21*
102158701 *3-15*
102166901 *4-15*, *4-17*
102169401 *16-7*
102186401 *13-3*
102196901 *12-17*
102197901 *5-15*
102199001 *6-11*
102235201 *13-3*
102238001 *12-29*
102240501 *12-25*, *12-27*
102241501 *16-7*
102241502 *16-7*
102242101 *10-7*
102243402 *16-7*
102243403 *13-3*
102248803 *16-7*
102249901 *16-3*
102251501 *16-7*
102271601 *7-11*
102275401 *15-3*, *15-5*, *15-7*
102278001 *5-3*
102292801 *4-9*, *4-15*, *4-17*
102304801 *7-9*
102310701 *1-17*, *1-19*, *1-33*
102323101 *4-5*, *4-9*, *4-15*, *4-17*
102323201 *4-5*, *4-9*, *4-15*, *4-17*
102330901 *16-9*
102336001 *8-13*
102336101 *8-13*
102355301 *6-27*
102356601 *14-3*
102356801 *14-3*
102357001 *14-3*
102376001 *11-9*, *11-11*, *11-13*
102430901 *7-13*
102440901 *12-25*, *12-27*
102453001 *11-5*
102453101 *11-5*
102508701 *12-17*
102515401 *11-3*
102518001 *3-5*, *3-11*, *12-17*
102518301 *3-5*, *3-11*
102522001 *8-7*
102526201 *11-3*, *11-9*
102540301 *7-15*
102555501 *16-3*
102562401 *16-3*
102570401 *16-11*
102572401 *12-17*
102601501 *16-5*
102603501 *16-5*
102605201 *16-5*
102606101 *16-5*
102607501 *16-5*
102616701 *11-9*
102668801 *16-9*
102669901 *16-7*
102674001 *16-5*

INDEX

102674101 *16-5*
102674201 *16-5*
102674401 *16-9*
102674601 *16-9*
102675001 *16-5*
102675101 *16-5*
102675201 *16-5*
102675301 *16-5*
102675401 *16-5*
102684602 *11-9*
102686101 *16-3*
102704901 *13-3*
102751601 *8-7*
102753401 *7-9*
102764401 *12-37*, *12-41*
102764402 *12-37*, *12-41*
102766201 *12-33*, *12-37*, *12-39*, *12-41*
102769701 *12-25*, *12-27*
102771701 *14-3*
102772402 *12-29*
102774501 *12-25*, *12-27*
102774601 *12-25*, *12-27*
102774701 *12-25*, *12-27*
102775101 *13-3*
102803401 *6-15*, *6-17*
102817101 *12-25*, *12-27*
102817201 *12-25*, *12-27*
102838101 *12-31*, *15-3*
102842401 *3-17*
102845101 *3-5*, *3-11*, *12-31*
102845203 *12-33*, *12-39*
102845204 *12-37*, *12-41*
102845501 *12-5*, *12-11*
102847801 *15-3*
102847802 *15-3*
102847803 *15-3*
102848701 *12-23*
102859501 *12-25*, *12-27*
102865101 *8-5*
102871801 *5-19*, *5-21*
102873401 *12-33*, *12-37*, *12-39*, *12-41*
102886301 *14-3*
102886401 *14-3*
102886501 *14-3*
102886601 *14-3*
102891101 *5-21*
102912801 *12-25*, *12-27*
102915701 *12-31*
102917101 *5-21*
102938301 *12-5*, *12-11*
102938601 *13-3*
102938701 *13-3*
102938801 *13-3*
102938901 *13-3*
102939001 *13-3*
102939101 *13-3*
102939102 *13-3*
102939501 *15-5*
102940801 *15-5*, *15-7*
102945401 *1-15*
102945402 *1-15*
102945404 *1-15*
102945406 *1-15*
102945408 *1-15*
102945409 *1-15*
102945410 *1-15*
102945411 *1-15*
102945412 *1-15*
102945501 *1-19*
102945502 *1-19*
102945504 *1-19*
102945506 *1-19*
102945508 *1-19*
102945509 *1-19*
102945510 *1-19*
102945511 *1-19*
102945512 *1-19*
102951701 *13-3*
102967601 *3-5*, *3-11*
102969401 *11-9*
102969801 *11-9*
102969901 *11-9*
102977001 *6-19*
102977002 *12-17*
102980801 *12-33*, *12-37*, *12-39*, *12-41*
102980901 *12-33*, *12-37*, *12-39*, *12-41*
103173301 *11-9*
103174401 *8-3*
103177401 *11-9*
103180101 *6-19*, *12-17*
103192701 *11-9*
103197301 *6-5*, *6-15*
103197401 *6-9*, *6-17*
103198201 *12-33*, *12-37*, *12-39*, *12-41*
103198401 *6-29*
103199001 *6-19*
103199101 *6-19*
103205401 *3-3*, *3-9*, *6-19*
103205501 *3-7*, *3-13*, *6-29*
103210201 *3-7*, *3-13*, *6-19*
103210301 *3-5*, *3-11*, *12-17*
103218601 *12-17*
103222001 *12-5*
103222101 *12-11*
103234302 *3-15*
103254401 *6-9*
103255601 *6-5*
103295101 *11-11*, *11-13*
103295203 *11-11*
103295204 *11-13*
103345701 *10-3*
103348201 *6-19*
103348202 *12-17*
103348501 *6-19*
103348601 *6-19*
103350901 *5-19*
103351001 *5-9*, *5-13*
103351101 *5-21*
103354401 *12-17*
103369501 *11-9*
103390801 *6-19*
103397901 *12-13*, *12-15*, *12-25*, *12-27*
103414901 *12-13*, *12-15*, *12-25*, *12-27*
96704416 *7-15*

A

AC cord *15-3*, *15-5*, *15-7*
AC cord receptacle *15-5*
accelerator bracket and bearing assembly *4-19*, *4-21*
accelerator cable *8-13*
accelerator pedal *4-19*, *4-21*
accelerator pedal adjustment tool *16-3*
accelerator pivot rod *4-19*, *4-21*
accelerator return spring *4-19*, *4-21*
accelerator rod *4-23*, *4-25*
access door *1-31*
adapter
  cable (IQDM) *16-7*
adhesive, guide ring *16-3*
adjuster
  hydraulic brake *16-7*
adjuster, lash *7-11*
air box *8-15*
air box top *8-15*
air filter *8-15*
air intake hose *8-15*
ammeter *15-3*, *15-5*, *15-7*
anchor body *4-3*, *4-7*
anchor body kit *4-3*, *4-7*
anchor, piston *4-3*, *4-7*
anti-sway bar *5-23*
A-plate strap *5-9*, *5-13*
A-plate, delta *5-9*, *5-13*
arbor *16-3*
arm
  governor *11-3*
  pivot *11-3*
  rocker *7-9*
armature *6-23*, *13-3*
armature conversion kit *6-23*
armrest *1-11*, *1-27*, *1-39*
assembly
  accelerator bracket and bearing *4-19*, *4-21*
  accelerator pivot rod *4-19*, *4-21*
  air box *8-15*
  air box top *8-15*
  armature *6-23*

INDEX

axle *11-7*
bearing, steering shaft *5-3*
bell crank and shaft *6-15*, *6-17*
brush connector *6-23*
brush holder *6-23*
carburetor *8-9*
connecting rod *7-13*
cylinder head *7-9*
delta A-plate *5-9*, *5-13*
delta shock and gear support *5-9*, *5-13*
drive clutch *10-3*
drive hub *10-3*
driven clutch *10-7*
driven clutch fixed-face *10-7*
field coil *6-23*
float *8-9*
fuel tank vent *8-7*
governor *11-5*
headlight *6-13*, *12-7*
headlight harness *6-13*, *12-7*
idle screw *8-9*
inner ball joint *5-7*
kingpin *5-11*, *5-15*
moveable-face *10-3*, *10-7*
pilot air screw *8-9*
plug cap *7-5*
ratchet *4-5*
secondary clutch weight *10-3*
steering shaft *5-3*
steering wheel *5-5*
turn signal lens *6-13*, *12-7*
axle *11-7*, *14-3*
axle shaft oil seal *11-7*, *14-3*
axle tube *14-3*

B

backing plate, brake *4-3*, *4-7*
bag rest mat *1-33*
bag, desiccant *10-3*
ball bearing *7-11*
ball joint *4-5*, *4-23*, *4-25*, *5-7*, *5-9*, *5-13*, *11-11*, *11-13*
ball joint, left-hand thread *5-7*, *5-9*, *5-13*
ball stud *6-15*, *6-17*
ball, shifter *11-5*
ball, steel pressure relief *7-7*
band, RPM limiter mount *7-5*
bar, drive *12-21*
bar, stabilizer *5-23*
barb, vent *8-5*, *8-7*
barrel, plastic *1-3*, *1-13*, *1-15*, *1-17*, *1-19*, *1-33*, *1-39*, *8-3*
battery cap, 6-volt *12-33*, *12-37*, *12-39*, *12-41*
battery charger *15-3*, *15-5*
battery charger case *15-3*, *15-5*, *15-7*
battery charger harness *12-5*, *12-11*
battery charger receptacle *12-23*
battery charger transformer *15-3*, *15-5*, *15-7*
battery charger wire assembly *15-5*
battery charger, onboard *15-7*
battery clamp *6-27*
battery condition indicator *12-17*
battery discharge machine *16-3*
battery hold-down *12-33*, *12-37*, *12-39*, *12-41*
battery hold-down rod *12-33*, *12-37*, *12-39*, *12-41*
battery insulator *1-37*
battery light *12-17*
battery terminal protector spray *16-3*
battery thermometer *16-3*
battery, 12-volt *6-27*
battery, 6-volt, Trojan T105 *12-33*, *12-39*
battery, 6-volt, Trojan T105, moist *12-33*, *12-39*
battery, 6-volt, Trojan T145 *12-37*, *12-41*
battery, 6-volt, Trojan T145, moist *12-37*, *12-41*
bearing *14-3*
ball *7-11*
ball (motor) *13-3*
ball (steering pinion) *5-7*
front wheel hub *5-17*
hub *5-17*
idler *10-3*
inner axle tube *11-7*, *14-3*
lower pinion (steering) *5-7*
needle *11-5*
outer axle tube *11-7*
pivot support *4-19*, *4-21*
steering shaft *5-3*
thrust *5-11*, *5-15*
bearing and oil seal remover *16-3*
bearing driver set *16-3*
bearing puller *16-3*
bearing puller wedge *16-3*
bearing seal *5-3*
bearing seat *5-3*
bell crank and shaft *6-15*, *6-17*
bellows *5-7*
belt, drive *10-5*
belt, starter/generator *6-25*, *10-3*
beverage holder *1-7*
bezel, choke cable *8-17*, *8-19*
bezel, headlight *6-13*, *12-7*
bezel, taillight *6-31*
block, brake-mounting *4-5*
block, fuse *6-15*, *6-17*
block, terminal *6-11*, *12-13*, *12-15*, *12-29*
body kick plate *1-13*, *1-15*, *1-17*, *1-19*, *1-33*
body, anchor *4-3*, *4-7*
body, center *1-13*, *1-15*, *1-17*, *1-19*
body, rear *1-33*
bolt, U- *5-21*
boot, steering column *5-3*
boot, switch *6-29*, *12-31*
bottom, air box *8-15*
box
air *8-15*
electrical component *6-15*, *6-17*
steering gear *5-7*
box, electrical component *6-15*, *6-17*, *12-25*, *12-27*
bracket *5-19*
accelerator cable *8-13*
adjustable starter/generator *6-25*
brake cable guide *5-9*, *5-13*
brake light switch *6-21*, *12-19*
FNR shifter *11-9*
governor cable *8-13*
headlight mounting *6-13*, *12-7*
horn *6-11*, *12-13*, *12-15*
muffler mounting *9-3*
oil filter mount *7-7*
oil level switch *7-11*
relay mounting *6-15*, *6-17*, *15-7*
retaining *8-17*, *8-19*
RPM limiter *7-5*
shock absorber *5-21*
shock mounting *5-21*
snubber *7-15*
stabilizer bar mounting *5-23*
starter/generator mounting *6-25*
steering column *5-3*
steering column mounting *5-3*
throttle spring return *8-11*
Tow/Run switch *6-29*
brake actuator kit *4-3*, *4-7*
brake adjustment tool *16-3*
brake backing plate *4-3*, *4-7*
brake cable *4-9*, *4-15*, *4-17*
brake cable equalizer *4-9*, *4-15*, *4-17*
brake cable hanger *5-19*
brake cable release tool *16-3*
brake cluster *4-3*, *4-7*
brake drum *4-3*, *4-7*
brake lever arm *4-3*, *4-7*
brake light switch bracket *6-21*, *12-19*
brake mounting block *4-5*
brake pedal
pedal, brake *4-5*
brake pedal adjustment tool *16-3*
brake pedal pad *4-5*
brake pedal tension tool *16-3*
brake return spring *4-15*, *4-17*
brake shoe *4-3*, *4-7*
brake spring *4-3*, *4-7*
breaker, circuit *15-5*, *15-7*
breather *11-3*, *14-3*
brush and screw set *6-23*
brush box assembly *13-3*

INDEX

brush connector *6-23*
brush holder *6-23*
brush inspection port cover *6-23*
brush kit, motor *13-3*
brush port cover *6-23*
brush rigging *13-3*
brush spring *13-3*
brush spring set *6-23*
brush, motor *13-3*
bulb, headlight *6-13*, *12-7*
bulb, tail light *6-31*
bumper
  drive unit (motor) *13-3*
  front *1-3*
  front, kit *1-3*
  rubber *1-25*, *4-5*
  seal, long *1-9*
  side trim *1-39*
  spring return *4-19*, *4-21*
bumper guard vinyl trim *1-17*, *1-19*
bumper, seat *1-21*, *1-23*
bushing *10-3*, *11-9*
  bronze *5-17*
  nylon *4-5*
  spindle *5-17*
  stabilizer bar *5-23*
  steel *5-11*, *5-15*, *5-19*, *5-21*
  urethane *5-9*, *5-11*, *5-13*, *5-15*, *5-19*, *5-21*
bushing support *5-23*
button, drive *10-7*
buzzer, reverse *6-11*, *6-19*, *6-31*, *12-13*, *12-15*, *12-17*, *12-35*

C

cable
  accelerator *8-13*
  brake *4-9*, *4-15*, *4-17*
  choke *8-17*, *8-19*
  FNR shifter *11-11*, *11-13*
  governor *8-13*
  IQDM *16-7*
calibration test module *16-3*
cam
  driven clutch *10-7*
  electrical component box *6-15*, *6-17*
cam installation tool *16-3*
cam, FNR shifter *11-9*
camshaft *7-11*
camshaft shim *7-11*
camshaft spring *7-11*
cap
  battery, 6-volt *12-33*, *12-37*, *12-39*, *12-41*
  dust *12-17*
  fuel tank *8-7*
  key switch *6-19*, *12-17*
  plug *7-5*
  seat back *1-11*, *1-27*, *1-29*
carburetor *8-9*
carburetor float level tool *16-7*
carburetor gasket *8-11*
carburetor insulator *8-11*
carburetor mounting gasket *8-11*
card, safety first *16-9*
case
  battery charger *15-3*, *15-5*, *15-7*
  differential gear *11-7*
  gear *11-3*, *14-3*
  rocker *7-9*
center body *1-13*, *1-15*, *1-17*, *1-19*
charger bezel tool *16-3*
charger harness *12-5*, *12-11*
charger receptacle *12-23*
charger, battery *15-3*, *15-5*
charger, battery, onboard *15-7*
choke cable *8-17*, *8-19*
choke cable bezel *8-17*, *8-19*
choke valve *8-15*
circuit breaker *12-31*, *15-3*, *15-5*, *15-7*
clamp
  battery *6-27*
  cable retaining *8-13*
  hose *8-5*, *8-7*, *8-11*, *8-15*
  muffler hose *9-3*
clevis, upper delta *5-11*, *5-15*
clip, meter *6-19*
cluster idler gear *11-5*
cluster, brake *4-3*, *4-7*
clutch alignment tool *16-5*
clutch removal tool *16-3*
clutch repair kit *10-7*
clutch tool kit *16-5*
clutch weight *10-3*
clutch, driven *10-7*
coil, field *6-23*
coil, ignition *7-5*
collet *7-9*
column, steering *5-3*
communication display module *16-5*
component box, electrical *6-15*, *6-17*
component mounting plate *12-25*, *12-27*
component mounting plate cover *12-29*
compression gauge *16-5*
compression mount *5-23*
compressor, piston ring *16-9*
compressor, valve spring *16-11*
computer, onboard *12-25*, *12-27*
connecting bar *1-39*
connecting rod *7-13*
connector, a- *6-23*
continuity tester *16-5*
control board *15-7*
controller, speed *12-25*, *12-27*
cord connector *7-11*
cord, AC *15-3*, *15-5*, *15-7*
cord, DC *15-3*, *15-5*, *15-7*
counterbalance guide shaft *7-13*
counterbalance weight *7-13*
cover
  brush inspection port *6-23*
  brush port *6-23*
  crankcase *7-11*
  dust *4-3*, *4-7*, *5-3*, *5-17*
  electrical box *6-15*, *6-17*
  oil pump *7-7*
  rocker switch hole *6-19*, *12-17*
  screw head *6-19*, *12-17*
  steering column *5-3*
cowl *1-3*
crankcase *7-13*
crankcase cover *7-11*
crankcase vent tube *8-11*
crankshaft *7-13*
crankshaft rod *7-13*
crankshaft shim *7-13*
C-type stop ring *5-7*
cup holder *1-7*
cup, spring *4-19*, *4-21*
current limiter *15-5*
cushion, shock absorber *5-19*, *5-21*
cutter, valve seat *16-5*, *16-11*

D

damper, RPM limiter *7-5*
dash *6-19*, *12-17*
dash component *1-5*
dash panel *6-19*, *12-17*
DC cord *15-3*, *15-5*, *15-7*
decal
  4-gauge wire warning *3-5*, *3-11*
  battery danger *3-5*
  driver/passenger *3-7*, *3-13*
  electrical cover safety *3-5*, *3-11*
  FNR *3-5*, *3-7*, *3-11*, *3-13*, *6-19*, *12-17*
  four-passenger warning *3-3*, *3-9*
  frame ground *3-7*, *3-13*
  IQ Plus *3-17*
  key switch *3-7*, *3-13*, *6-19*
  on/off *3-5*, *3-11*, *12-17*
  operating instructions *3-7*, *3-13*
  operating instructions (electric) *3-5*, *3-11*, *12-17*
  rollover warning *3-3*, *3-9*, *6-19*
  rotating parts *3-7*, *3-13*
  run/service switch *3-7*, *3-13*, *6-29*
  Tow/Run switch *3-5*, *3-11*, *12-31*
  Villager *3-15*
delta A-plate *5-9*, *5-13*
delta A-plate sub-assembly *5-9*, *5-13*

INDEX

delta shock and gear support *5-9*, *5-13*
desiccant bag *10-3*
DF-terminal insulator *6-23*
diagnostic port *12-17*
diesel tachometer probe *16-9*
differential
  drive unit *14-3*
differential gear *11-7*, *14-3*
differential gear case *11-7*
differential housing *14-3*
differential idler gear *11-7*
differential pin *11-7*
diode *6-15*, *6-17*
dipstick *7-3*
door, access *1-31*
drain plug *7-7*
drain plug gasket *7-7*, *11-3*
drink holder *1-7*
drive bar *12-21*
drive belt *10-5*
drive button *10-7*
drive clutch assembly *10-3*
drive clutch button *10-3*
drive clutch fixed sheave tool *16-5*
drive clutch fixed-face *10-3*
drive clutch holder tool *16-5*
drive clutch hub puller *16-5*
drive clutch puller *16-5*
drive clutch pulley *10-3*
drive clutch spider removal tool *16-5*
drive clutch spring *10-3*
drive clutch weight *10-3*
drive hub *10-3*
drive unit bumper *13-3*
driven clutch *10-7*
driven clutch button *10-7*
driven clutch cam *10-7*
driven clutch cam puller *16-5*
driven clutch fixed-face assembly *10-7*
driven clutch puller plug *16-5*
driven clutch spring compression base tool *16-5*
driven clutch spring compression collar tool *16-5*
driven clutch spring compression nut tool *16-5*
driver, drive clutch *10-3*
drum, brake *4-3*, *4-7*
dry moly lubricant *16-7*
duct, intake *8-17*, *8-19*
dust cap *12-17*
dust cover *4-3*, *4-7*, *5-3*, *5-17*

E

eccentric adjustment screw *5-11*, *5-15*
E-clip *4-9*, *4-15*, *4-17*
electrical box cover *6-15*, *6-17*
electrical component box *6-15*, *6-17*, *12-25*, *12-27*
end bell, commutator *6-23*
end bell, output shaft *6-23*
end cap, motor *13-3*
engine *7-3*
engine mounting plate *7-15*
engine shroud *7-3*
equalizer pivot *4-9*
equalizer rod *4-9*, *4-15*, *4-17*
equalizer, brake cable *4-9*, *4-15*, *4-17*
exhaust system *9-3*
exhaust valve *7-9*
extrusion, fender *1-3*

F

face, moveable *10-3*, *10-7*
fan housing *7-3*
fan shroud *7-3*
fan, flywheel *7-5*
fender extrusion *1-3*
fender, inner *1-33*
field coil *6-23*
field coil housing *6-23*
fill plug *11-3*
filter
  air *8-15*
  fuel *8-5*
  oil *7-7*
  oil pump *7-7*
fitting, thread-forming grease *5-7*, *5-9*, *5-13*, *5-17*
fixed-face, drive clutch *10-3*
fixed-face, driven clutch *10-7*
float *8-9*
floor mat *1-5*, *1-13*, *1-15*, *1-17*, *1-19*
flywheel *7-5*
flywheel fan *7-5*
flywheel fan plate *7-5*
flywheel puller *16-7*
FNR closeout brush *6-19*
FNR shift lever *11-3*
FNR shifter *11-9*
FNR shifter bracket *11-9*
FNR shifter cable *11-11*, *11-13*
FNR shifter cam *11-9*
foam, seat *1-9*, *1-21*, *1-23*, *1-25*
foot rest *1-39*
foot rest mat *1-39*
fork, shift *11-5*
frame and field, motor *13-3*
front body support *1-33*
front bumper *1-3*
front bumper kit *1-3*
front spring retainer plate *5-11*, *5-15*
F-terminal hardware *6-23*
f-terminal insulator *6-23*
fuel filter *8-5*
fuel gauge sending unit *8-7*
fuel line *8-5*, *8-7*, *8-11*
fuel meter *6-19*
fuel pump, impulse *8-5*
fuel tank *8-7*
fuel tank cap *8-7*
fuel tank strap *8-5*
fuel tank vent *8-7*
fuse *12-23*, *15-3*, *15-5*, *15-7*
  10-amp *6-15*, *6-17*
  20-amp *6-15*, *6-17*
  3/8-amp *12-23*
fuse and receptacle *12-23*
fuse block *6-15*, *6-17*

G

gasket *14-3*
  carburetor *8-11*
  carburetor mounting *8-9*, *8-11*
  crankcase cover *7-9*, *7-11*
  drain plug *7-7*, *11-3*
  exhaust *7-9*, *9-3*
  head *7-9*
  insulator *7-9*, *8-11*
  liquid *11-3*, *14-3*, *16-7*
  rocker case *7-9*
  seat *1-21*, *1-23*
  sending unit *8-7*
  taillight *6-31*
gasket kit, FE350 *7-9*
gauge, battery condition *12-17*
gauge, compression *16-5*
gauge, fuel-hour *6-19*
gear
  case *11-3*, *14-3*
  cluster idler *11-5*
  differential *11-7*, *14-3*
  differential idler *11-7*, *14-3*
  differential output *14-3*
  helical *7-13*, *11-5*, *11-7*
  spur *7-13*, *11-5*
  synchro *11-5*
gear yoke *16-7*
governor *11-5*
governor arm *11-3*
governor cable *8-13*
governor cable bracket *8-13*
governor gear shaft *12-5*
governor shaft installation tool *16-7*
grommet *8-7*, *8-17*, *8-19*
guard, splash *8-3*
guide
  intake valve *7-9*

INDEX

valve *7-9*
valve seat cutter *16-11*
guide ring adhesive *16-3*

H

handrail *1-39*
hanger, brake cable *5-19*
hardware, F-terminal *6-23*
harness, battery charger *12-5*, *12-11*
harness, headlight *6-5*
harness, wire *6-5*, *6-9*, *6-15*, *6-17*, *12-5*, *12-11*
harness, wire, lighting *6-9*
head gasket *7-9*
head, cylinder *7-9*
headband, sealed, motor *13-3*
headband, vented, motor *13-3*
headlight assembly *6-13*, *12-7*
headlight bulb *6-13*, *12-7*
headlight harness *6-13*, *12-7*
headlight retainer *6-13*, *12-7*
headlight wire harness *6-5*
heatsink and rectifier *15-3*, *15-5*, *15-7*
helical gear *7-13*, *11-5*, *11-7*
hill brake rod *4-5*
hill brake weld assembly *4-5*
hinge assembly *1-25*
hinge pin *1-25*
hinge plate *1-9*, *1-13*, *1-15*, *1-17*, *1-19*, *1-21*, *1-23*, *1-33*
hinge, long *1-25*
hold-down rod, battery *12-33*, *12-37*, *12-39*, *12-41*
hold-down, battery *12-33*, *12-37*, *12-39*, *12-41*
holder, cup *1-7*
horn *6-11*, *12-13*, *12-15*
horn bracket *6-11*, *12-13*, *12-15*
horn button and wire assembly *6-21*, *12-19*
hose, air intake *8-15*
hose, fuel *8-5*
hour meter *6-19*
housing
2-pin *12-21*
3-pin *12-21*, *13-3*
differential *14-3*
fan *7-3*
field coil *6-23*
hub *5-17*
hub bearing *5-17*
hub, synchronizer clutch *11-5*
hydraulic brake adjuster *16-7*
hydrometer *16-7*

I

idle screw assembly *8-9*
idler bearing *10-3*
idler gear, differential *14-3*
ignition coil *7-5*
indicator, battery condition *12-17*
inner frame snubber *7-15*
input shaft *14-3*
insert, synchronizer *11-5*
instrument panel *6-19*, *12-17*
insulating washer *13-3*
insulator gasket *7-9*, *8-11*
insulator, battery *1-37*
insulator, carburetor *8-11*
insulator, motor terminal *13-3*
intake duct *8-17*, *8-19*
intake pipe *8-11*
intake valve *7-9*
intermediate shaft *14-3*
intermediate steering shaft *5-3*
internal retaining ring pliers *16-7*
IQ display module (IQDM) *16-7*

J

jet, main *8-9*
jet, pilot *8-9*
joint
ball *4-5*, *4-23*, *4-25*, *5-9*, *5-13*, *11-11*, *11-13*
left-hand thread ball *5-7*, *5-9*, *5-13*

K

key
crankshaft *7-5*, *7-13*
driven clutch *10-7*
On/Off *6-19*, *12-17*
square *10-7*
starter/generator *6-23*
woodruff *11-3*
key switch *6-19*
key switch cap *6-19*, *12-17*
key switch, On/Off *12-17*
kick plate, body *1-13*, *1-15*, *1-17*, *1-19*, *1-33*
kingpin *5-11*, *5-15*
kit
2-pin housing *12-21*
3-pin housing *12-21*, *13-3*
accelerator pivot rod *4-19*, *4-21*
anchor body *4-3*, *4-7*
brake pedal adjustment tool *16-3*
brake shoe retainer *4-3*, *4-7*
clutch repair *10-7*
differential gear case *11-7*
drive clutch button *10-3*
drive clutch weight *10-3*
driven clutch button *10-7*
fuel tank *8-7*
impulse fuel pump rebuild *8-5*
IQ display module (IQDM) *16-7*
motor brush *13-3*
motor speed sensor *13-3*
park brake latch *4-5*
park brake pedal *4-5*
reverse buzzer *6-11*, *6-31*, *12-13*, *12-15*, *12-35*
shock absorber cushion *5-19*, *5-21*
steering column rebuild *5-3*
taillight hardware *6-31*
tune-up *16-9*
knob, forward/reverse *11-9*, *11-11*, *11-13*

L

lash adjuster *7-11*
latch, air box *8-15*
latch, park brake *4-5*
leaf spring *5-11*, *5-15*, *5-19*, *5-21*
lens, headlight *6-13*, *12-7*
lens, taillight *6-31*
lever
change *11-3*
choke *8-15*
light
battery *12-17*
oil *6-19*
limit switch *6-15*, *6-17*, *6-21*, *11-9*, *12-19*
limiter
current *15-5*
RPM *7-5*
voltage *6-11*
line, fuel *8-5*, *8-7*, *8-11*
link, rack and pinion drag *5-7*
link, stabilizer bar *5-23*
liquid gasket *11-3*, *14-3*, *16-7*
low oil warning light *6-19*
lubricant, dry moly *16-7*
lubricant, moly-teflon *13-3*, *16-7*
lug nut *2-3*, *2-5*
lug stud *5-17*, *11-7*, *14-3*

M

magnet, speed sensor *13-3*
main jet *8-9*
maintenance/operation switch *6-29*
mat, floor *1-5*, *1-13*, *1-15*, *1-17*, *1-19*
mat, foot rest *1-39*
MCOR *12-21*
meter clip *6-19*
meter, volt ohm *16-11*
module
calibration test *16-3*
communication display *16-5*
moly-teflon lubricant *16-7*
motor
48-volt IQ Plus *13-3*
motor brush *13-3*
motor brush kit *13-3*

INDEX

motor brush spring *13-3*
motor bumper *13-3*
motor controller *12-25*, *12-27*
motor end cap *13-3*
motor frame and field *13-3*
motor headband, sealed *13-3*
motor headband, vented *13-3*
motor magnet, speed sensor *13-3*
motor speed sensor *13-3*
motor speed sensor kit *13-3*
motor terminal and lead assembly *13-3*
motor terminal insulator *13-3*
mount, compression *5-23*
mounting block, brake *4-5*
moveable-face *10-3*, *10-7*
muffler hose clamp *9-3*

N

nameplate kit, amber *3-15*
needle bearing *11-5*
nozzle, main *8-9*
nut, lug *2-3*, *2-5*

O

OBC *12-25*, *12-27*
oil filler tube *7-3*
oil filter *7-7*
oil filter mount bracket *7-7*
oil filter screen *7-11*
oil filter screen plate *7-11*
oil level sensor *7-11*
oil level switch bracket *7-11*
oil pump and rotor *7-7*
oil pump cover *7-7*
oil pump filter *7-7*
oil pump plate *7-7*
oil seal *7-9*, *7-11*, *7-13*, *11-3*, *11-5*
oil warning light, low *6-19*
onboard battery charger *15-7*
onboard computer *12-25*, *12-27*
operation/maintenance switch *6-29*
O-ring *7-3*, *7-9*, *7-11*, *7-13*

P

pad
- accelerator pedal *4-19*, *4-21*
- brake pedal *4-5*
- park brake *4-5*

paint, touch-up *16-7*
panel, instrument *6-19*, *12-17*
park brake latch *4-5*
park brake pedal *4-5*
park brake rod sleeve *4-5*
park brake spacer *4-5*
park brake torsion spring *4-5*
pawl *4-5*
pedal group *4-5*
pedal, accelerator *4-19*, *4-21*
pedal, park brake *4-5*
pilot air screw assembly *8-9*
pilot jet *8-9*
pin, differential *11-7*
pin, piston *7-13*
pinion, steering *5-7*
pipe, intake *8-11*
piston *7-13*
piston anchor *4-3*, *4-7*
piston pin *7-13*
piston ring *7-13*
piston ring compressor *16-9*
piston ring pliers *16-9*
piston ring set *7-13*
pivot arm *11-3*
pivot support bearing *4-19*, *4-21*
plate
- body kick *1-15*, *1-19*, *1-33*
- component mounting *12-25*, *12-27*
- engine mounting *7-15*
- flywheel fan *7-5*
- front spring retainer *5-11*, *5-15*
- hinge *1-9*, *1-13*, *1-15*, *1-17*, *1-19*, *1-21*, *1-23*, *1-33*
- oil filter screen *7-11*
- oil pump *7-7*
- receptacle backing *12-23*
- score card *5-5*
- spring mounting *5-11*, *5-15*
- steering wheel *5-5*
- thrust *11-5*, *11-7*

plate, Tow/Run switch *12-31*
pliers
- internal retaining ring *16-7*
- piston ring *16-9*
- retaining ring *16-9*

plug
- drain *7-7*
- driven clutch puller *16-5*
- fill *11-3*
- spark *7-5*

plug cap *7-5*
pole set *6-23*
port, diagnostic *12-17*
press weldment *16-5*
protector spray, battery terminal *16-3*
puller
- bearing *16-3*
- clutch *16-3*
- drive clutch *16-5*
- drive clutch hub *16-5*
- driven clutch cam *16-5*
- flywheel *16-7*
- seal *16-9*
- special use tool *16-9*

pulley
- drive clutch *10-3*
- starter-generator *6-23*

pump, impulse fuel *8-5*
push rod *7-9*

R

race, front hub bearing *5-17*
rack and pinion drag link *5-7*
rack guide pressure spring *5-7*
rack, steering *5-7*
ratchet, park brake *4-5*
reamer, valve guide *16-9*
rear spring shackle *5-19*
receptacle and fuse *12-23*
receptacle backing plate *12-23*
receptacle, AC cord *15-5*
receptacle, battery charger *12-23*
rectifier with heatsink *15-3*, *15-5*, *15-7*
regulator, voltage *6-15*, *6-17*
relay *6-15*, *6-17*
relay mounting bracket *6-15*, *6-17*, *15-7*
relay, 12-volt *6-11*
relay, 48-volt *15-3*, *15-5*, *15-7*
remover, bearing and oil seal *16-3*
retainer
- accelerator pedal spring *4-19*, *4-21*
- brake shoe *4-3*, *4-7*
- headlight *6-13*, *12-7*
- shock absorber cushion *5-19*, *5-21*
- spring (drive clutch) *10-3*
- valve spring *7-9*

retaining bracket *8-17*, *8-19*
retaining ring *5-3*
retaining ring pliers *16-9*
return spring bumper *4-19*, *4-21*
reverse buzzer *6-11*, *6-19*, *6-31*, *12-13*, *12-15*, *12-17*, *12-35*
rim, wheel, white *2-3*
ring
- piston *7-13*
- retaining *5-3*, *6-15*, *6-17*, *10-3*, *10-7*
- snap *5-7*, *7-9*, *7-13*
- spiral backup *10-3*
- synchronizer *11-5*

ring, C-type stop *5-7*
ring, piston *7-13*
rivet, blind push *1-3*, *12-29*
rocker arm *7-9*
rocker case *7-9*
rocker case gasket *7-9*
rocker shaft *7-9*
rocker switch *12-17*
rod

INDEX

- accelerator *4-23*, *4-25*
- accelerator pivot *4-19*, *4-21*
- battery hold-down *12-33*, *12-37*, *12-39*, *12-41*
- connecting *7-13*
- crankshaft *7-13*
- equalizer *4-9*, *4-15*, *4-17*
- hill brake *4-5*
- push *7-9*
- shift *11-5*
- tie *5-9*, *5-13*

rotor, oil pump and *7-7*
RPM limiter *7-5*
RPM limiter bracket *7-5*
RPM limiter damper *7-5*
RPM limiter mount band *7-5*
rubber bumper *1-25*

S

safety first card *16-9*
screen, oil filter *7-11*
screw, eccentric adjustment *5-11*, *5-15*
screw, valve clearance adjuster *16-9*
seal
- bearing *5-3*
- intake *8-15*
- lip *14-3*
- oil *7-9*, *7-11*, *7-13*, *11-3*, *11-5*, *11-7*, *14-3*
- steering pinion dust *5-7*
- vertical socket dust *5-7*, *5-9*, *5-13*

seal puller *16-9*
sealant *11-3*, *14-3*
seat
- spring *7-9*
- valve *7-7*

seat back *1-11*, *1-27*, *1-29*
seat back assembly *1-11*, *1-27*, *1-29*
seat back cap *1-11*, *1-27*, *1-29*
seat back, white *1-11*, *1-27*, *1-29*
seat bottom assembly *1-9*, *1-21*, *1-23*, *1-25*
seat bumper *1-21*, *1-23*
seat cover, vinyl *1-9*, *1-21*, *1-23*, *1-25*
seat foam *1-9*, *1-21*, *1-23*, *1-25*
seat gasket *1-21*, *1-23*
seat support *1-9*, *1-21*, *1-23*
seat support, four-passenger *1-25*
seat, bearing *5-3*
sending unit, fuel gauge *8-7*
sensor, motor speed *13-3*
sensor, oil level *7-11*
set, brush and screw *6-23*
set, pole *6-23*
shackle weldment *5-21*
shackle, rear spring *5-19*
shaft
- change *11-3*
- counterbalance guide *7-13*
- governor gear *12-5*
- input *14-3*
- intermediate *14-3*
- intermediate steering *5-3*
- rocker *7-9*
- steering column *5-3*
- transmission *11-5*

shift fork *11-5*
shift lever *11-3*
shift rod *11-5*
shifter, FNR *11-9*
shim, camshaft *7-11*
shim, crankshaft *7-13*
shock absorber *5-9*, *5-13*, *5-19*, *5-21*
shock absorber cushion *5-19*, *5-21*
shock absorber cushion retainer *5-19*, *5-21*
shock mounting bracket *5-21*
shoe, brake *4-3*, *4-7*
shroud *7-3*
shroud, engine *7-3*
shroud, fan *7-3*
sleeve
- delta A-plate *5-9*, *5-13*
- governor *11-5*
- park brake rod *4-5*
- synchronizer *11-5*

snap ring *5-7*, *7-9*, *7-13*
snubber bracket *7-15*
snubber, inner frame *7-15*
socket *5-7*, *5-9*, *5-13*
solenoid *12-25*, *12-27*
solenoid, 12-volt *6-15*, *6-17*
spacer
- accelerator pivot rod *4-19*, *4-21*
- park brake *4-5*

spanner wrench *16-9*
spark plug *7-5*
speed controller *12-25*, *12-27*
speed sensor *13-3*
speed sensor magnet *13-3*
speed sensor, motor *13-3*
spindle *5-17*
spiral backup ring *10-3*
splash guard *8-3*
spray, battery terminal protector *16-3*
spring
- accelerator return *4-19*, *4-21*
- brake *4-3*, *4-7*
- brake return *4-15*, *4-17*
- brush *6-23*, *13-3*
- camshaft *7-11*
- drive button *10-3*
- drive clutch *10-3*
- driven clutch *10-7*
- extension return *8-15*
- leaf *5-11*, *5-15*, *5-19*, *5-21*
- park brake torsion *4-5*
- rack guide pressure *5-7*
- shifter *11-5*
- steering shaft compression *5-3*
- synchronizer *11-5*
- throttle return *8-11*
- valve *7-9*

spring cup *4-19*, *4-21*
spring mounting plate *5-11*, *5-15*
spring, motor brush *13-3*
spur gear *7-13*, *11-5*
stabilizer bar *5-23*
stabilizer bar link *5-23*
stabilizer bar mounting bracket *5-23*
starter/generator *6-23*
starter/generator belt *6-25*, *10-3*
starter/generator pulley *6-23*
steel bushing *5-11*, *5-15*, *5-19*, *5-21*
steel pressure relief ball *7-7*
steering column *5-3*
steering column bearing press tool *16-9*
steering column retaining ring tool *16-9*
steering gear box *5-7*
steering pinion *5-7*
steering pinion dust seal *5-7*
steering rack *5-7*
steering shaft assembly *5-3*
steering shaft compression spring *5-3*
steering wheel *5-5*
steering wheel plate *5-5*
steering wheel puller tool *16-9*
stem, valve *2-3*, *2-5*
stiffener, flywheel side *7-15*
stiffener, PTO side *7-15*
strap, A-plate *5-9*, *5-13*
strap, fuel tank *8-5*
stud *7-15*
- lug *5-17*, *11-7*, *14-3*

stud, ball *6-15*, *6-17*
support yoke (steering) *5-7*
support, bushing *5-23*
support, front body *1-33*
suppressor, voltage *6-11*, *12-13*, *12-15*, *15-3*, *15-5*, *15-7*
switch
- four-position *15-5*, *15-7*
- key *6-19*, *12-17*
- limit *6-15*, *6-17*, *6-21*, *11-9*, *12-19*
- rocker *12-17*
- Tow/Run *12-31*

switch plate, Tow/Run *12-31*
switch rubber boot *6-29*, *12-31*
switch, operation/maintenance *6-29*
switch, toggle *6-29*
synchro gear *11-5*

INDEX

synchronizer clutch hub *11-5*
synchronizer insert *11-5*
synchronizer sleeve *11-5*
synchronizer spring *11-5*
system, exhaust *9-3*

T

12-volt battery *6-27*
12-volt solenoid *6-15*, *6-17*
tachometer *16-9*
tachometer probe, diesel *16-9*
tail light bulb *6-31*
taillight *6-31*
taillight assembly *6-31*
taillight base *6-31*
taillight bezel *6-31*
taillight gasket *6-31*
taillight hardware kit *6-31*
taillight lens *6-31*
tank, fuel *8-7*
terminal block *6-11*, *12-13*, *12-15*, *12-29*
tester, continuity *16-5*
thermometer, battery *16-3*
thread-forming grease fitting *5-7*, *5-9*, *5-13*, *5-17*
throttle return spring *8-11*
throttle spring return bracket *8-11*
thrust bearing *5-11*, *5-15*
thrust plate *11-5*, *11-7*
tie rod *5-9*, *5-13*
tie wrap *5-7*, *6-11*, *6-15*, *6-17*, *8-17*, *8-19*, *11-11*, *11-13*, *12-5*, *12-11*, *12-13*, *12-15*, *12-25*, *12-27*, *12-29*
tire *2-3*, *2-5*
tire and wheel assembly *2-3*, *2-5*
toggle switch *6-29*
tool
  accelerator pedal adjustment *16-3*
  belt tensioning, starter/generator *16-11*
  brake adjustment *16-3*
  brake cable release *16-3*
  brake pedal adjustment *16-3*
  brake pedal tension *16-3*
  cam installation *16-3*
  carburetor float level *16-7*
  charger bezel *16-3*
  clutch alignment *16-5*
  cT-wrench *16-5*
  drive clutch fixed sheave *16-5*
  drive clutch holder *16-5*
  drive clutch spider removal *16-5*
  driven clutch spring compression base *16-5*
  driven clutch spring compression collar *16-5*
  driven clutch spring compression nut *16-5*
  governor shaft installation *16-7*
  puller, special use *16-9*
  steering column bearing press *16-9*
  steering column retaining ring *16-9*
  steering wheel puller *16-9*
  transaxle axle seal *16-9*
  transaxle pinion seal *16-9*
  transmission *16-9*
  valve guide driver *16-9*
  valve seat cutter *16-5*
tool kit, clutch *16-5*
touch-up paint *16-7*
Tow/Run switch *12-31*
Tow/Run switch bracket *6-29*
Tow/Run switch plate *12-31*
transaxle *14-3*
transaxle axle seal tool *16-9*
transaxle housing *14-3*
transaxle pinion seal tool *16-9*
transaxle, unitized *11-3*
transformer, battery charger *15-3*, *15-5*, *15-7*
transmission shaft *11-5*
transmission tool *16-9*
trim
  cowl *1-3*
tube
  crankcase vent *8-11*
  oil filler *7-3*
tune-up kit *16-9*
turn signal lens *6-13*, *12-7*
T-wrench tool *16-5*

U

U-bolt *5-21*
u-bolt *5-19*
unitized transaxle *11-3*
upper delta clevis *5-11*, *5-15*
urethane bushing *5-9*, *5-11*, *5-13*, *5-15*, *5-19*, *5-21*

V

valve
  choke *8-15*
  exhaust *7-9*
  fuel pickup tube *8-7*
  intake *7-9*
  reed *7-9*
valve clearance adjuster screw *16-9*
valve guide *7-9*
valve guide driver tool *16-9*
valve guide reamer *16-9*
valve guide, intake *7-9*
valve seat *7-7*
valve seat cutter *16-5*, *16-11*
valve seat cutter guide *16-11*
valve seat cutter tool *16-5*
valve seat t-wrench *16-11*
valve spring *7-9*
valve spring compressor *16-11*
valve spring retainer *7-9*
valve stem *2-3*, *2-5*
vent barb *8-5*, *8-7*
vertical socket dust seal *5-7*, *5-9*, *5-13*
volt ohm meter *16-11*
voltage limiter *6-11*
voltage regulator *6-15*, *6-17*
voltage suppressor *6-11*, *12-13*, *12-15*, *15-3*, *15-5*, *15-7*

W

warning light, low oil *6-19*
washer, insulating *13-3*
wedge, bearing puller *16-3*
weight
  clutch *10-3*
  counterbalance *7-13*
  secondary clutch *10-3*
weldment
  press *16-5*
wheel *2-3*, *2-5*
wheel and tire assembly *2-3*, *2-5*
wheel rim, white *2-3*
wheel, steering *5-5*
wire assembly, battery charger *15-5*
wire harness *6-5*, *6-9*, *6-15*, *6-17*, *12-5*, *12-11*
wire harness, headlight *6-5*
wire harness, lighting *6-9*
woodruff key *11-3*
wrap, tie *5-7*, *6-11*, *6-15*, *6-17*, *8-17*, *8-19*, *11-11*, *11-13*, *12-5*, *12-11*, *12-13*, *12-15*, *12-25*, *12-27*, *12-29*
wrench, spanner *16-9*

Y

yoke, gear *16-7*
yoke, support (steering) *5-7*

Ingersoll Rand
Industrial Technologies

Club Car®

QMI REGISTERED

Club Car, Inc.
P.O. Box 204658
Augusta, GA 30917-4658
USA

Web www.clubcar.com
Phone 1.706.863.3000
1.800.ClubCar
Int'l +1 706.863.3000
Fax 1.706.863.5808