Club Car®

2008
Precedent
Illustrated Parts List

Gasoline and Electric Vehicles

Manual Number 103373001
Edition Code 0907H0209G

USING THE ILLUSTRATED PARTS LIST

⚠ WARNING

- **This manual is to be used only for identification and ordering of service parts. Be sure to read and use the maintenance and service manual before attempting any vehicle repairs.**

This manual covers all 2008 Club Car® Precedent® Professional, Champion, i2, i2L, Villager 4 and 4 Pass vehicles.

The manual is divided into sections. Note that there are two or three flags on the outside edge of each page. The first flag contains the section number of which that page is a part. The other flag (or flags) contains the letter D, E, or G, signifying that the page pertains to diesel, electric, or gasoline vehicles.

Use the Table of Contents to find the sections and pages that contain the parts and assemblies you seek. The Table of Contents lists section numbers, and under them, the individual page titles and numbers to be found in that section. The index can be used to find specific parts and assemblies. The index is divided into numerical and alphabetical listings with the page numbers in italic text.

There is a two-page spread for each individual page title in the Table of Contents. On the left-hand page is an illustration showing the parts in their relative positions; the parts are each tagged with an item number in a balloon. The right-hand page is the parts list page, and gives the page title at the top, then the item numbers (corresponding to the numbers on the illustration), part descriptions, and quantity of parts used. Some item numbers have more than one part number because several configurations of a component are represented together on one spread.

Note that a part description may be indented. This indention corresponds to a parts assembly level indicated by the numbers 1, 2, 3, and 4 at the top left corner of the parts description area of the parts list page. A part that is indented to *level 2* is a component of the *level 1* part (assembly) that it is listed under. A *level 3* part is a component of the *level 2* part that it is listed under, and a *level 4* part is a component of the *level 3* part preceding it. In each case, the part quantity given for a level 2, 3, or 4 part *is the quantity used per next higher level assembly of which it is a component.* A part that is not indented is a *level 1* part. This means that the quantity given is the quantity used per the portion of the vehicle illustrated on that particular spread.

HOW TO ORDER PARTS

Replacement parts and accessories can be obtained from our network of authorized dealers and distributors. You can obtain the name and phone number of your closest authorized Club Car dealer or distributor by visiting our web site at www.clubcar.com and clicking on the "*Distributor Search*" link or by calling our toll-free Service Parts and Technical Assistance hotline at (800) 872-2246 or (706) 863-3000, extension 3887.

P. O. Box 204658
Augusta, Georgia 30917-4658 USA
Telephone 706-863-3000
Service Parts Fax 706-855-7413
www.clubcar.com

NOTE: *This illustrated parts list represents the most current information at the time of publication. Club Car, Inc. is continually working to further improve its vehicles and other products. These improvements may affect the parts used to service the vehicle. Any modification and/or significant change in specifications will be forwarded to all Club Car and Carryall distributors/dealers and will, when applicable, appear in future editions of this illustrated parts list.*

Club Car, Inc. reserves the right to change specifications and designs at any time without notice and without the obligation of making changes to units previously sold.

Copyright © 2007 Club Car, Inc.
Club Car, *Precedent*, and *Surlyn*
are registered trademarks of Club Car, inc.
This manual effective August 6, 2007.

CONTENTS

SECTION 1 – BODY AND TRIM

Front Bumper 1-3
Front Body 1-5
Dash – Style A 1-7
Dash – Style B 1-9
Floor Mat, Retainer, and Front Underbody – Style B 1-11
Kick Plate – Gasoline Vehicle 1-13
Kick Plate – Electric Vehicle 1-15
Seat with Hip Restraints 1-17
Backrest and Structural Accessory Module (SAM) 1-19
Rear Body 1-21
Underbody Covers (Vehicle Without Canopy) 1-23
Canopy – Beige 1-25
Canopy – White 1-27
Rear Seat – Precedent Villager 4 and i2 4 Passenger 1-29
Rear Footrest Assembly – Precedent Villager 4 and i2 4 Passenger 1-31
Four Passenger Conversion Kit – Beige 1-33
Four Passenger Conversion Kit – White 1-35
Four Passenger Conversion Kit – Gray 1-37

SECTION 2 – WHEEL AND TIRES

Wheels and Tires – Professional and i2 2-3
Wheels and Tires – Champion and i2L 2-5

SECTION 3 – DECALS

Decals – Gasoline Vehicle 3-3
Decals – Electric Vehicle, Styles A, B, and C 3-5
Decals – Electric Vehicle, Style A 3-7
Decals – Electric Vehicle, Style B and Style C 3-9
Decal – Precedent Villager 4 and i2 4 Passenger 3-11

SECTION 4 – BRAKES AND PEDAL GROUP ASSEMBLIES

Rear Brake Assembly, Self-Adjusting 4-3
Brake Cables 4-5
Pedal Group Connections – Gasoline Vehicle 4-7
Pedal Group Connections – Electric Vehicle 4-9
Pedal Group Components – Gasoline Vehicle 4-11
Pedal Group Components – Electric Vehicle 4-13

CONTENTS

SECTION 5 – STEERING, FRONT AND REAR SUSPENSION

Steering Wheel – Champion and i2L 5-3
Steering Wheel – Professional and i2 5-5
Steering Column 5-7
Front Suspension, Upper 5-9
Front Suspension, Lower (Style B) 5-11
Rear Suspension – Gasoline Vehicle 5-13
Rear Suspension – Electric Vehicle 5-15
Rear Suspension – Precedent Villager 4 and i2 4 Passenger 5-17
Steering Gear Assembly (Style B) 5-19

SECTION 6 – ELECTRICAL SYSTEM – GASOLINE VEHICLE

Electrical Components, Front Body – Gasoline Vehicle 6-3
Battery – Gasoline Vehicle 6-5
Wiring – Gasoline Vehicle 6-9
Instrument Panel Wire Harness 6-13
Starter/Generator Assembly Model G425419 – Gasoline Vehicles 6-15
Starter/Generator Mounting – FE350 6-17

SECTION 7 – AS11 FE350 ENGINE

AS11 FE350 Engine without ACR (Automatic Compression Release) – Shrouds and Brackets 7-3
AS11 FE350 Engine – Ignition Components and Flywheel 7-5
FE350 Engine – Oil Circulation 7-7
AS11 FE350 Engine – Cylinder Head 7-9
AS11 FE350 Engine without ACR – Crankcase, Camshaft, and Oil Sensor 7-11
AS11 FE350 Engine – Crankcase and Crankshaft 7-13
FE350 Engine Mounting 7-15

SECTION 8 – FUEL, INTAKE, AND GOVERNOR SYSTEMS

Fuel System 8-3
Carburetor Assembly – FE350 8-5
Carburetor Installation – FE350 8-7
Governor and Accelerator Cables 8-9
Choke and Air Box Assembly 8-11

SECTION 9 – EXHAUST SYSTEM

Exhaust System – FE350 9-3

CONTENTS

SECTION 10 – TORQUE CONVERTER

Drive Clutch 10-3
Drive Belt 10-5
Driven Clutch 10-7

SECTION 11 – UNITIZED TRANSAXLE

Unitized Transaxle – Gear Cases and Brackets 11-3
Unitized Transaxle – F&R Transmission and Gear Reduction 11-5
Transaxle – Gasoline Vehicles, Differential and Axles 11-7
Forward/Reverse Shifter Assembly – Gasoline Vehicle 11-9
Transmission Cable 11-11

SECTION 12 – ELECTRICAL SYSTEM – ELECTRIC VEHICLE

Electrical Components, Front Body – Electric Vehicle 12-3
Wiring – IQ System with Style A Battery Configuration 12-7
Wiring – IQ System with Styles B or C Battery Configuration 12-11
Wiring – Excel System with Style B or C Battery Configuration 12-15
Forward/Reverse Switch and Tow/Run Switch – Electric Vehicle, Style A 12-17
Forward/Reverse Switch and Tow/Run Switch – Electric Vehicle, Styles B and C 12-19
Single Point Watering System, Style A 12-21
Single Point Watering System, Style B 12-23
Single Point Watering System, Style C 12-25
Batteries, Bucket, and Charger Receptacle – IQ System, Style A 12-27
Batteries, Bucket, and Charger Receptacle – IQ and Excel Systems, Style B 12-29
Batteries, Bucket, and Charger Receptacle – IQ and Excel Systems, Style C 12-31
Batteries, Bucket, and Charger Receptacle – IQ and Excel Systems, Heavy Duty, Style C 12-33
Batteries, Bucket, and Charger Receptacle – IQ and Excel Systems, CE, Style C 12-35
Batteries, Bucket, and Charger Receptacle – IQ and Excel Systems, Heavy Duty, CE, Style C 12-37
Computer, Controller, and Solenoid – IQ System, Style A 12-39
Computer, Controller, and Solenoid – IQ System, Styles B and C 12-41
Computer, Controller, and Solenoid – Excel System, Styles B and C 12-43

SECTION 13 – ELECTRIC MOTOR

Motor (Model 5BC59JBS6390) – Electric Vehicle 13-3
Motor (Model EJ4-4001) – Electric Vehicle 13-5
Motor (Model EJ8-4001A) – Electric Vehicle 13-7

CONTENTS

SECTION 14 – TRANSAXLE – ELECTRIC VEHICLES

Transaxle – Electric Vehicles 14-3

SECTION 15 – BATTERY CHARGERS

PowerDrive 3 Battery Charger, Domestic 15-3
PowerDrive 2 Battery Charger (Model 22110), Domestic 15-5
PowerDrive Battery Charger (Model 17930), Domestic 15-7
PowerDrive Battery Charger (Model 18780), Export 15-9
PowerDrive Battery Charger (Model 20310), European 15-11

SECTION 16 – MAINTENANCE AND SERVICE TOOLS

Maintenance and Service Tools 16-3
Maintenance and Service Tools, Continued 16-5
Maintenance and Service Tools, Continued 16-7
Maintenance and Service Tools, Continued 16-9
Maintenance and Service Tools, Continued 16-11

SECTION i – INDEX

BODY AND TRIM

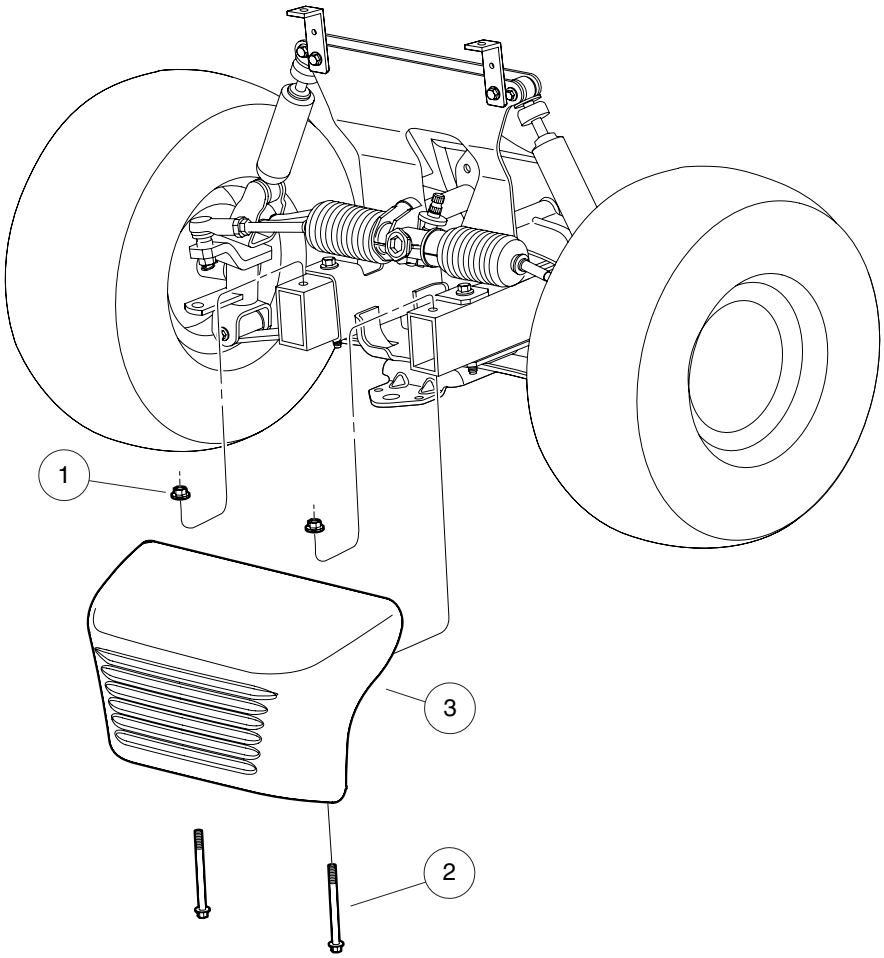

000437-001

FRONT BUMPER

ITEM	PART NO.	DESCRIPTION	QTY
		1 2 3 4	
1	102298401	Nut,m8,all Metal Lock	2
2	102534201	Bolt - Fl Hd, M8 X 95	2
3	103330601	Asm, Bumper, Front, Precedent	1

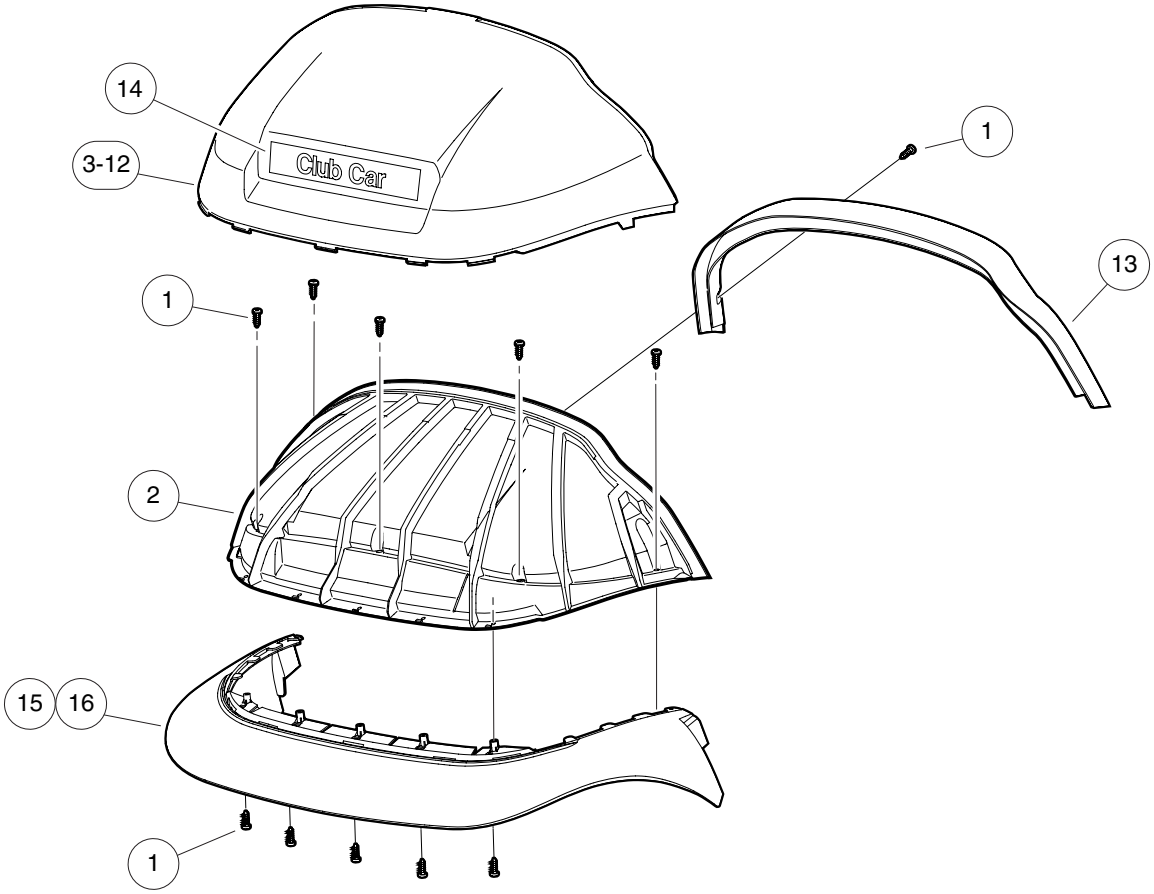

000434-001

ITEM	PART NO.	DESCRIPTION	QTY
		1 2 3 4	
1	102296020	Screw, Torx Pan Hd Pt, M6 X 20	14
2	102501501	Brow	1
3	102502401	Panel, Beauty Front, White	1
4	102502402	Panel, Beauty Front, Beige	1
5	102502404	Panel, Beauty Front, Gray	1
6	102502405	Panel, Beauty Front, Red	1
7	102502406	Panel, Beauty Front, Burgundy	1
8	102502407	Panel, Beauty Front, Green	1
9	102502408	Panel, Beauty Front, Blue	1
10	102502409	Panel, Beauty Front, Black	1
11	102502411	Panel, Beauty, Front, Cayenne	1
12	102502413	Panel-beauty Front, Atlantic	A/R
13	102502501	Brow Cap	1
14	102502601	Nameplate - Cs	1
15	102534403	Fascia, Grey	1
16	102534404	Fascia, Blk	1

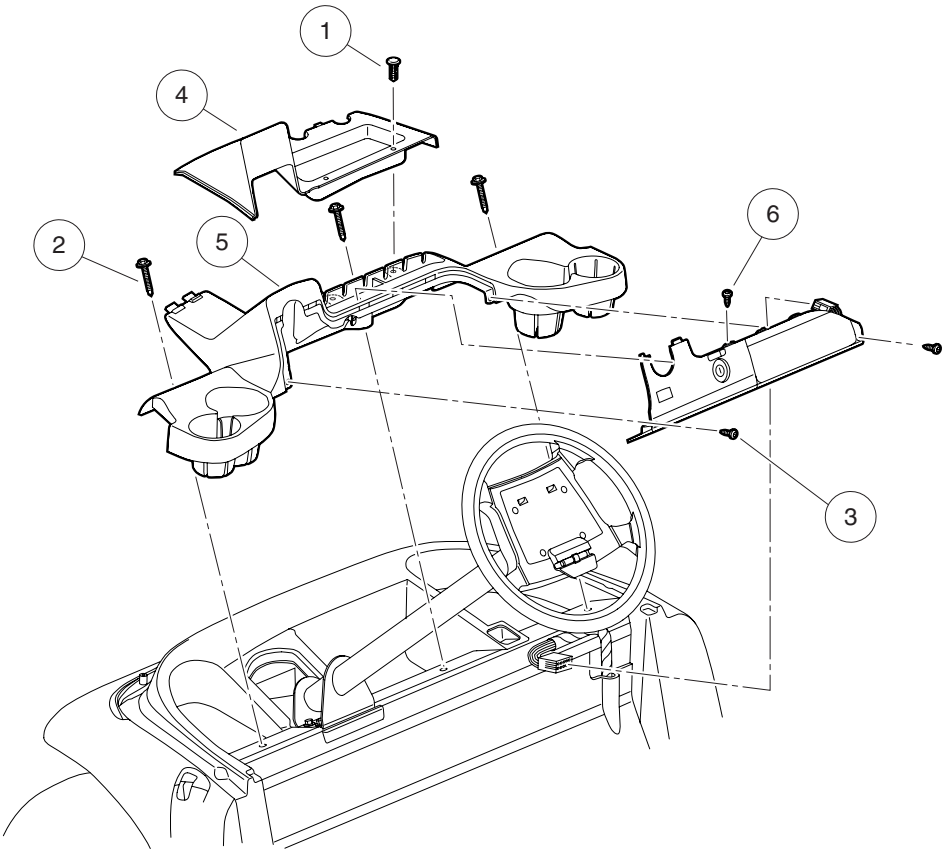

000438-001

DASH – STYLE A

ITEM	PART NO.	DESCRIPTION	QTY
		1 2 3 4	
1	1010434	Barrel - Plastic	2
2	102292356	Screw-1/4-20x56 Hwh Self Drill	3
3	102296819	Screw-m6 X 19-pnhd Ab	2
4	102380401	Dash, Tray	1
5	102523101	Dash Assembly	1
6	102557201	Screw, #6-20 Type Abx1.oo Pan	1

Note: Dash-style A should be used with front underbody-style A only. Underbody-style A is no longer available as a service part. If underbody needs to be replaced as well, order underbody-style B and dash-style B.

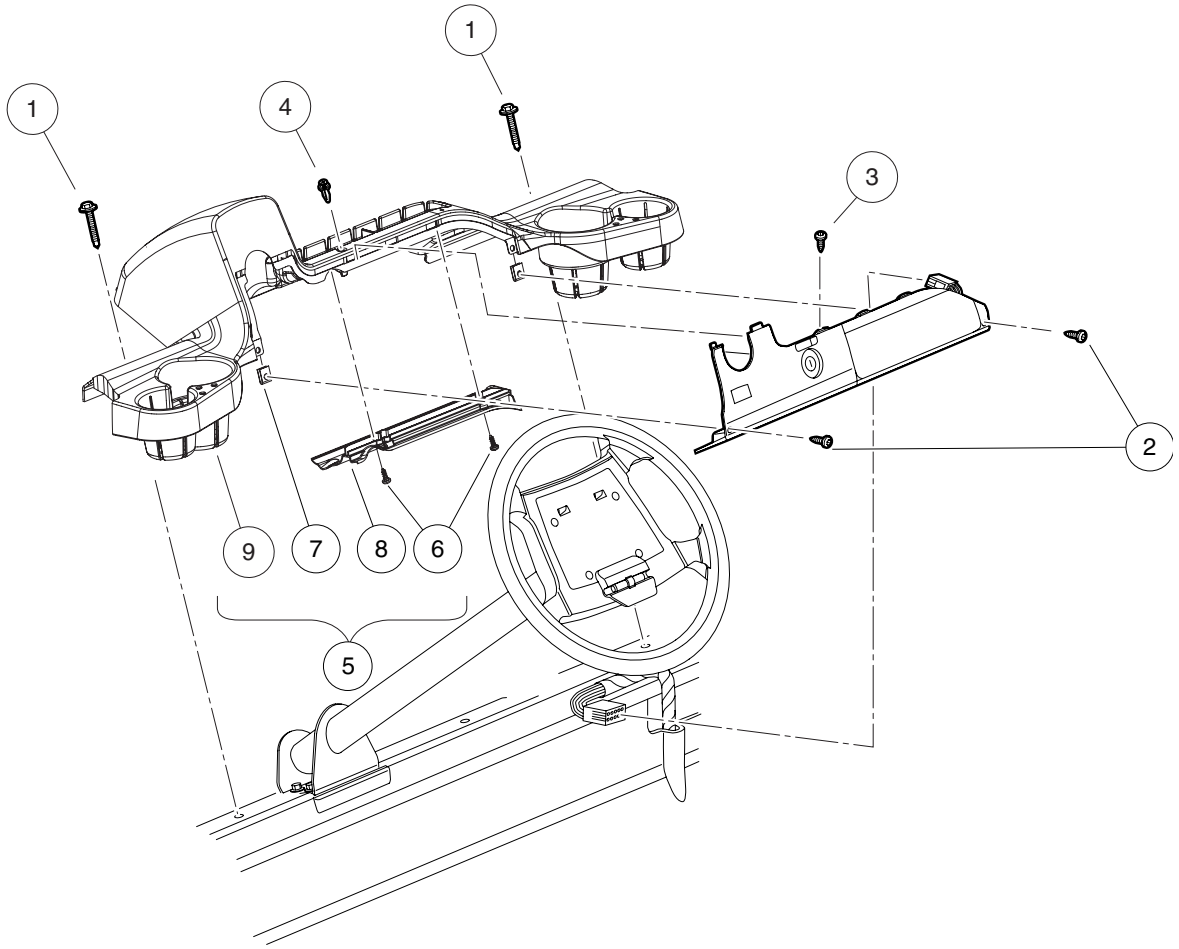

000438-002

DASH – STYLE B

ITEM	PART NO.	DESCRIPTION	QTY
		1 2 3 4	
1	102292356	Screw-1/4-20x56 Hwh Self Drill	2
2	102296819	Screw-m6 X 19-pnhd Ab	2
3	102557201	Screw, #6-20 Type Abx1.oo Pan	1
4	102915601	Plastic Rivet - Tuflock	1
5	103402701	Dash Assembly, Prec (includes items 6 through 9)	1
6	102295916	Screw-torx Pan Hd Pt,m6 X 16	2
7	102297001	U-nut, 1/4" Type Ab	2
8	102521801	Drain Channel - Dash	1
9	N/A	Dash, Prec	1

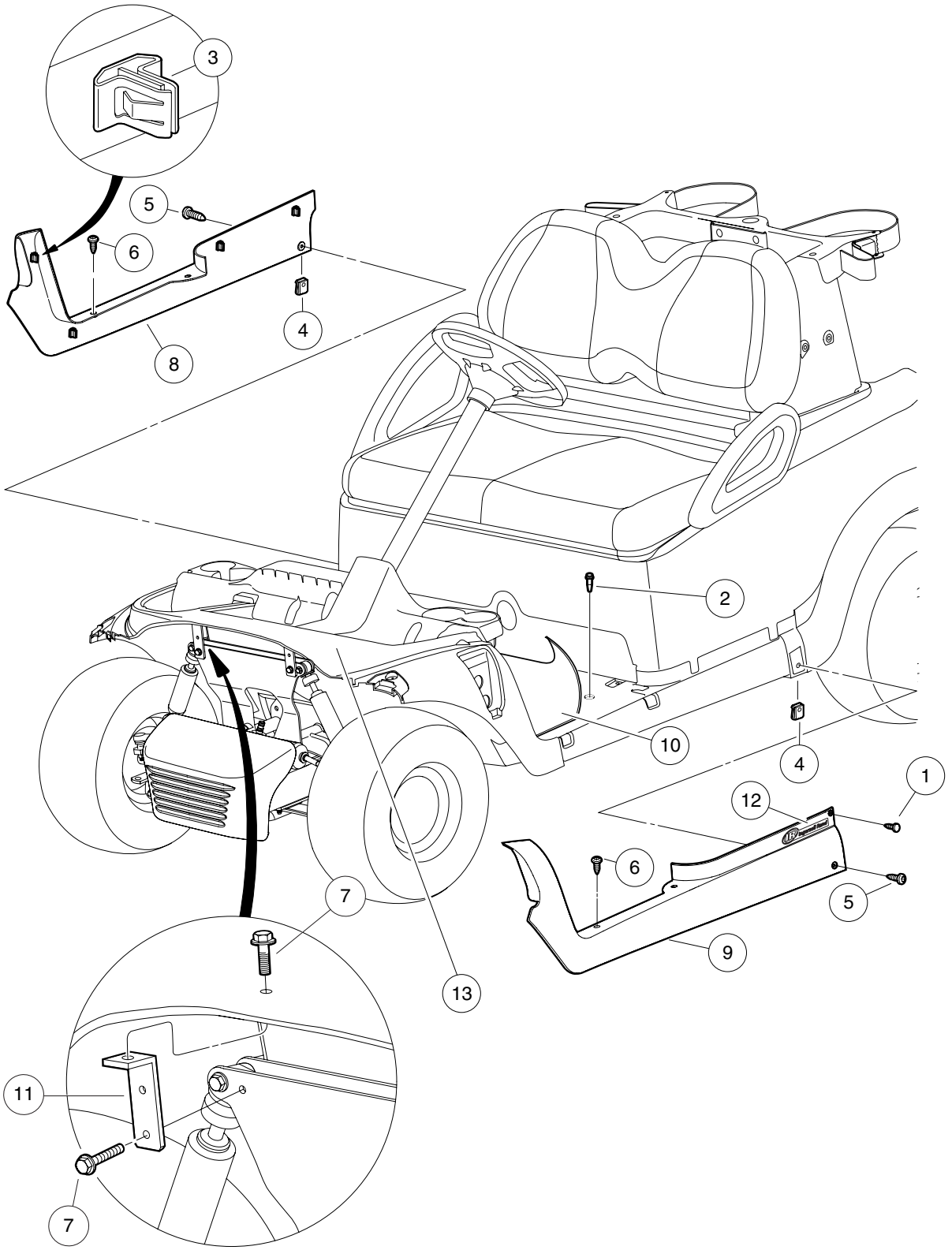

000497-001

FLOOR MAT, RETAINER, AND FRONT UNDERBODY – STYLE B

ITEM	PART NO.	DESCRIPTION	QTY
		1 2 3 4	
1	1010434	Barrel - Plastic	2
2	102292356	Screw-1/4-20x56 Hwh Self Drill	3
3	102292701	Clip-body-trim	8
4	102296601	U-nut, M6-1.0 Prev Torque	2
5	102296920	Screw, M6 Torx Bttn Hd Sems	2
6	102298020	Screw, K80x20, Torx Pn Hd Pt	4
7	102298716	M8-1.25x16 Taptite	4
8	102302504	Retainer Asm-floormat Rh, Blk	1
9	102302604	Retainer Asm-floormat Lh, Blk	1
10	102504802	Floormat, Precedent	1
11	102521901	Bracket-clamshell	2
12	102523901	Decal, IR/Club Car	2
13	****	Asm-front Underbody, Black	1

**** Special order item available upon request.

Note: Underbody-style B should be used with dash-style B only.

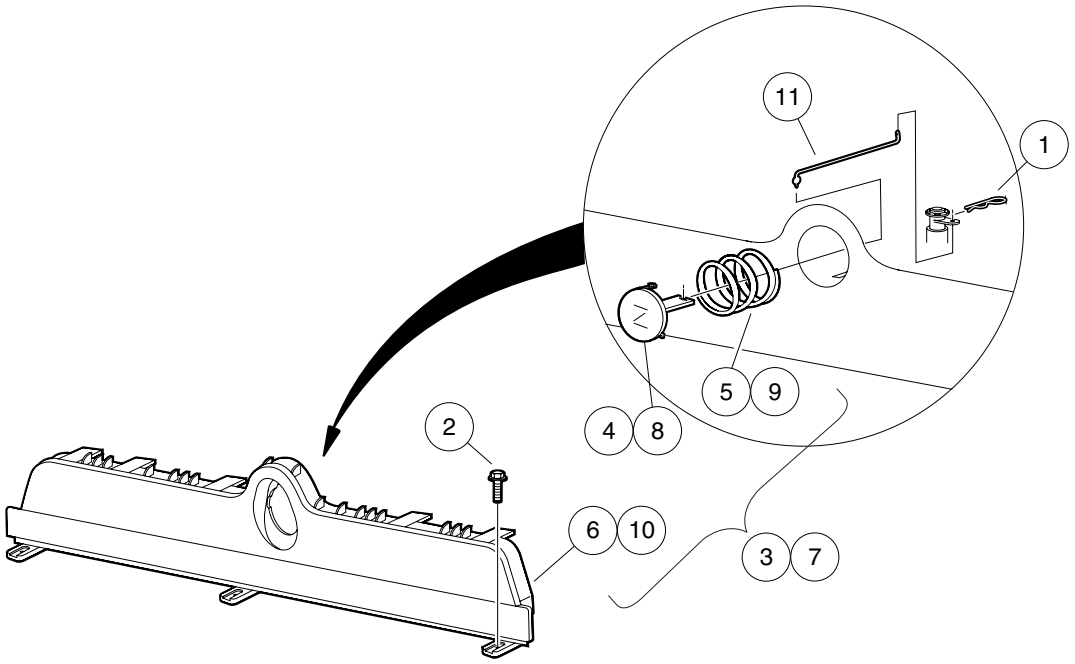

000501-001

KICK PLATE – GASOLINE VEHICLE

ITEM	PART NO.	DESCRIPTION	QTY
		1 2 3 4	
1	1014413	Pin, Hair Spring Cotter	1
2	102298030	Screw, K80x30, Torx Pn Hd Pt	3
3	102511701	Asm-gas Kick Plate, Grey (includes items 4 through 6)	1
4	101811401	Lever, Choke	1
5	101856201	Compression Spring	1
6	102511801	Plate -gas Kick, Grey	1
7	102511702	Asm-gas Kick Plate, Blk (includes items 8 through 10)	1
8	101811401	Lever, Choke	1
9	101856201	Compression Spring	1
10	102511802	Plate - Gas Kick, Blk	1
11	102514401	Rod, Choke Button	1

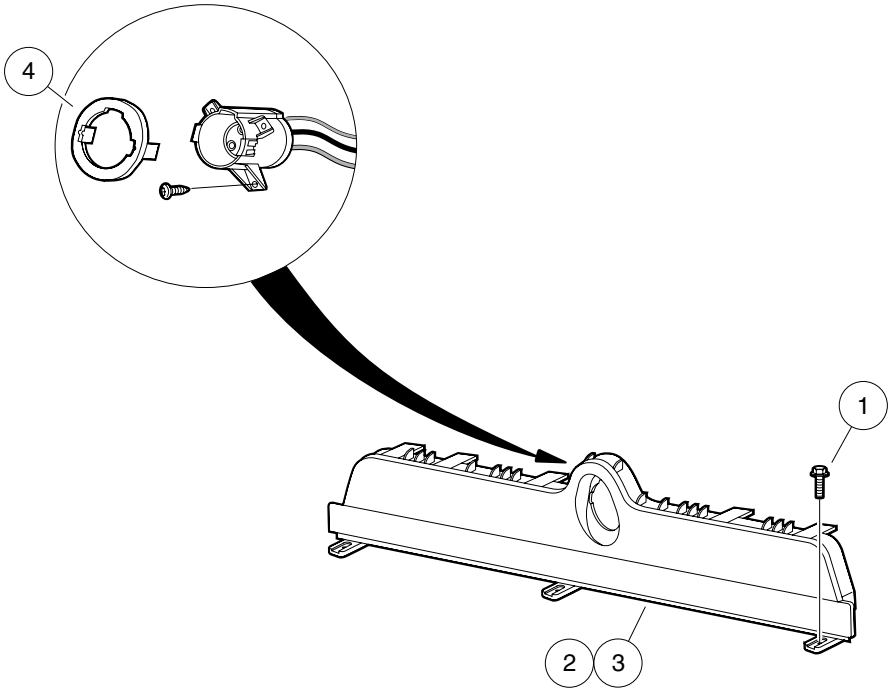

000500-001

KICK PLATE – ELECTRIC VEHICLE

ITEM	PART NO.	DESCRIPTION	QTY
		1 2 3 4	
1	102298030	Screw, K80x30, Torx Pn Hd Pt	3
2	102508201	Plate - Electric Kick, Grey	1
3	102508202	Plate - Electric Kick Blk	1
4	102516901	Socket Trim	1

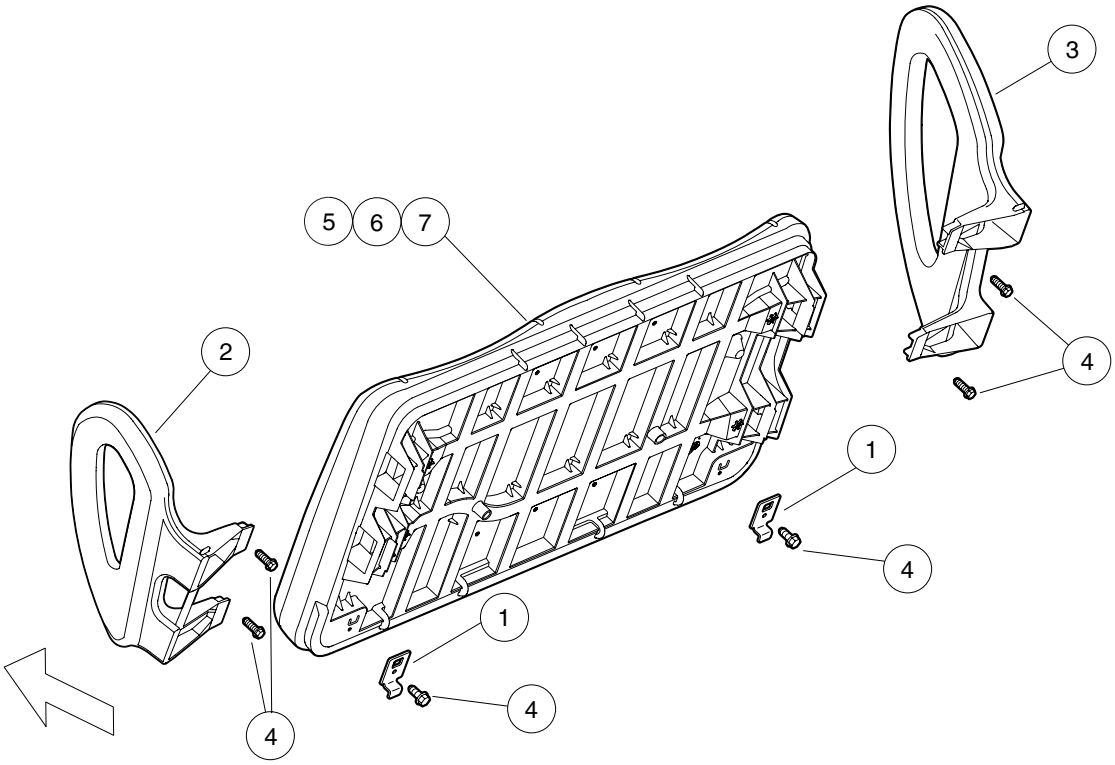

000440-002

SEAT WITH HIP RESTRAINTS

ITEM	PART NO.	DESCRIPTION	QTY
		1 2 3 4	
1	102554601	Hinge Plate, Prec	2
2	102562701	Hip Restraint, Prec, Lh	1
3	102562801	Hip Restraint, Prec, Rh	1
4	102562901	Screw, Seat Bottom Prec	6
5	103423001	Seat Bottom Asy, Prec-beige	1
6	103423002	Seat Bottom Asy, Prec-white	1
7	103423004	Seat Bottom Asy, Prec-gray	1

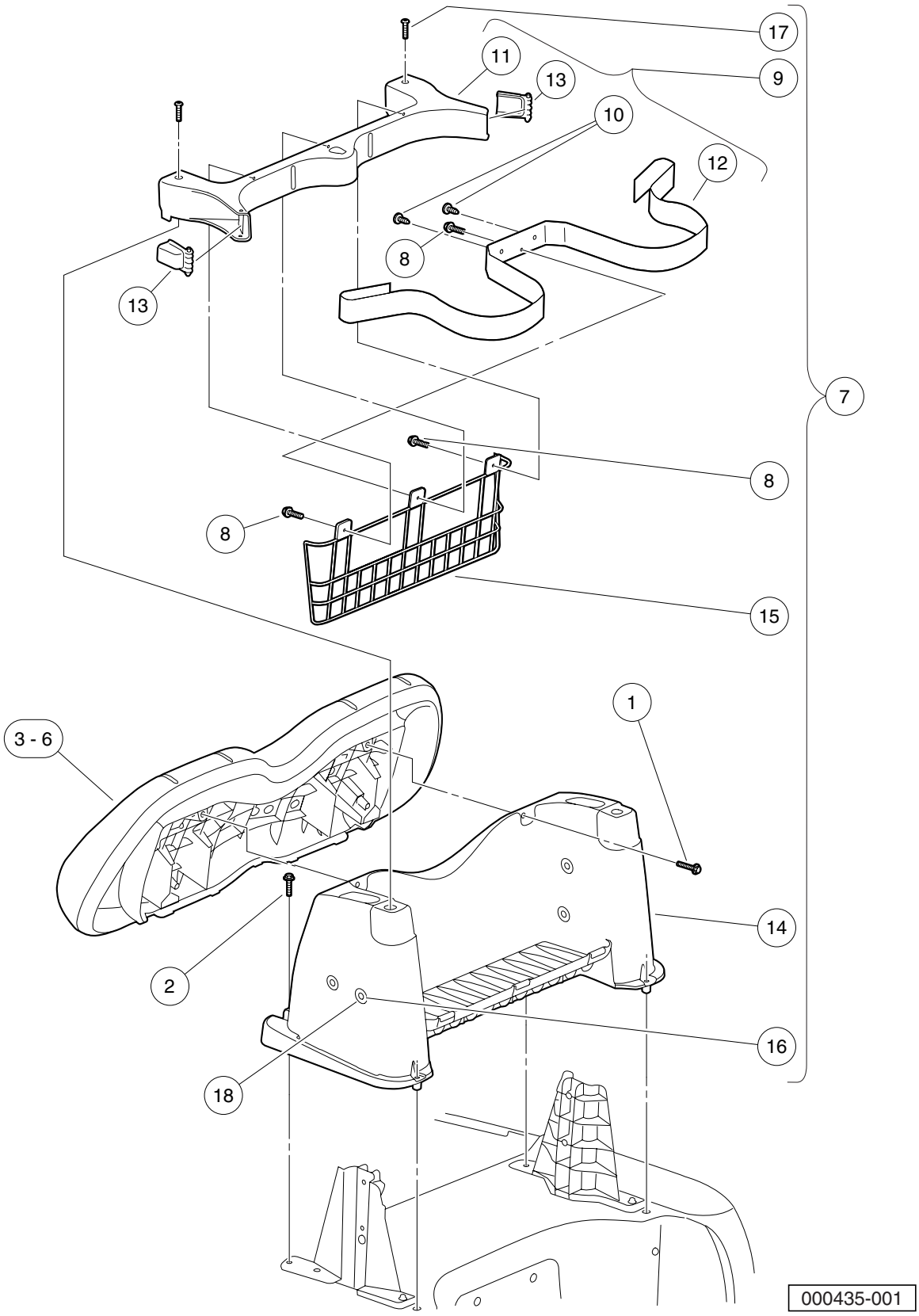
17
11
13
9
10
12
8
13
7
8
8
15
1
3 - 6
14
2
16
18
000435-001

BACKREST AND STRUCTURAL ACCESSORY MODULE (SAM)

ITEM	PART NO.	DESCRIPTION	QTY
		1 2 3 4	
1	102296530	Screw - M6 X 1.0 X 30 Sems	2
2	102298240	Bolt, Flange Head, M8-1.25 X 40	4
3	102503221	Service Backrest Asm, Beige	1
4	102503222	Service Backrest Asm, White	1
5	102503224	Service Backrest Asm, Gray	1
6	102503225	Service Backrest Asm-black	1
7	102503901	Asm-sam (includes items 8 through 17)	1
8	102297125	Screw M6-1.0x25.4 Thd Fm Sems	3
9	102504001	Asm-bag Hoop (includes items 10 through 13)	1
10	1010434	Barrel - Plastic	2
11	102504201	Hoop-bag	1
12	102504301	Strap, Bag	1
13	102517001	Buckle-bag Strap	2
14	N/A	Structural Accessory Module	1
15	102504501	Panel, SAM	1
16	102551701	Insert M6x1.0	4
17	103327601	Screw, 5/16, Torx, Bosscrew	2
18	102568701	Barrel - Plastic 6mm	8

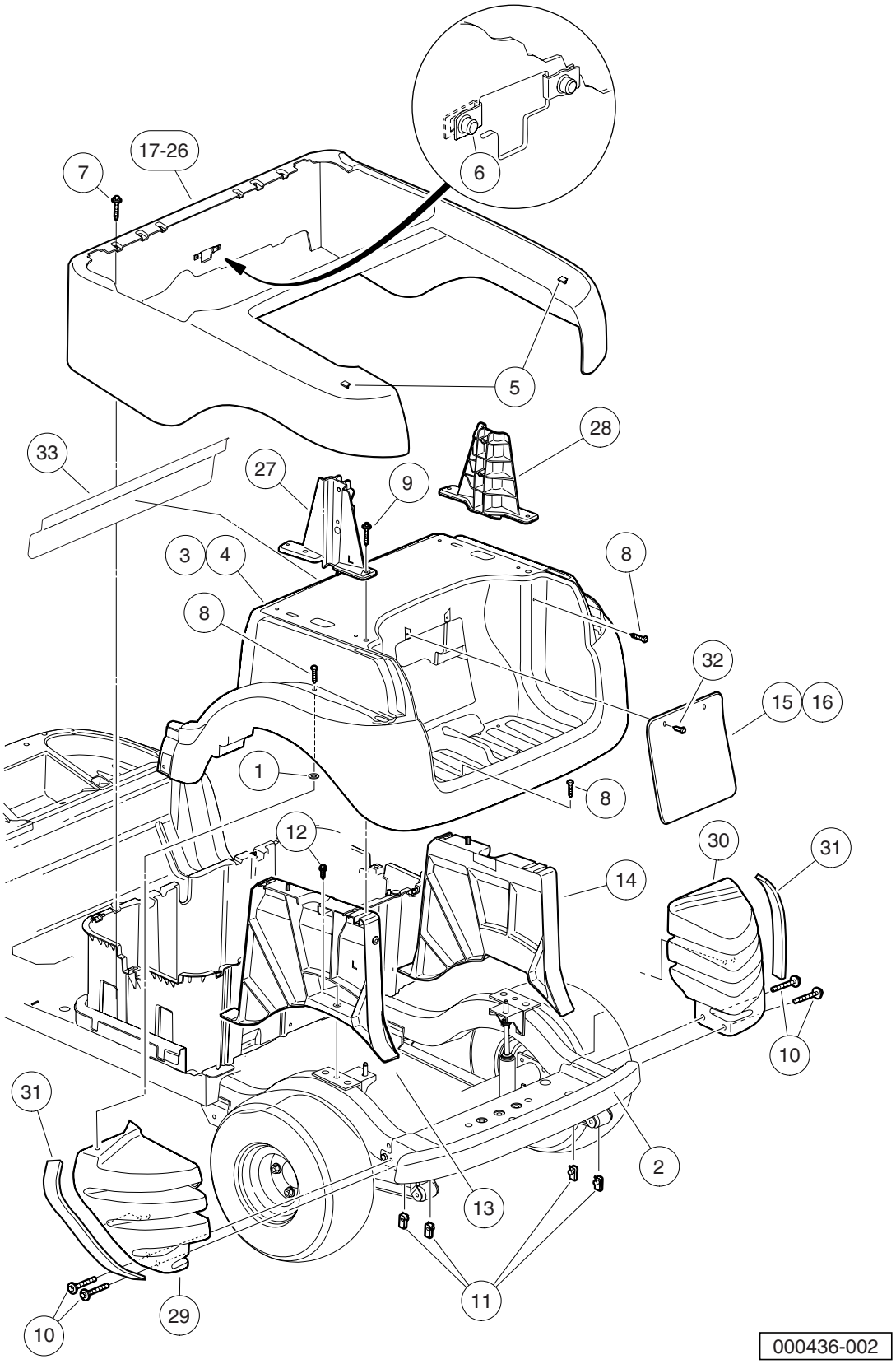
17-26
7
6
5
28
33
27
9
3
4
8
8
32
15
16
1
8
12
30
31
14
10
31
2
13
11
29
10
000436-002

ITEM	PART NO.	DESCRIPTION	QTY
		1 2 3 4	
1	1012571	Washer, 5/16 Extra Thick Flat	2
2	102279001	Rear Bumper Beam	1
3	102279103	Underbody - Rear, Grey	1
4	102279104	Underbody - Rear, Blk	1
5	102292701	Clip-body-trim	2
6	102296601	U-nut, M6-1.0 Prev Torque	2
7	102297230	Screw,m6,torx,interlock,thread	4
8	102298030	Screw, K80x30, Torx Pn Hd Pt	6
9	102298240	Bolt, Flange Head, M8-1.25 X 40	2
10	102298580	M8-1.25 X 80 Sems	4
11	102298601	J-clip - M8 X 1.25	4
12	102298716	M8-1.25x16 Taptite	2
13	102500501	Asm, Rear U/b Support, Lh	1
14	102500601	Asm, Rear U/b Support, Rh	1
15	102501401	Panel, Access, Gray	1
16	102501402	Panel, Access, Black	1
17	102502301	Panel, Beauty, Rear, White	1
18	102502302	Panel, Beauty, Rear, Beige	1
19	102502304	Panel, Beauty, Rear, Gray	1
20	102502305	Panel, Beauty, Rear, Red	1
21	102502306	Panel, Beauty, Rear, Burgundy	1
22	102502307	Panel, Beauty, Rear, Green	1
23	102502308	Panel, Beauty, Rear, Blue	1
24	102502309	Panel, Beauty, Rear, Black	1
25	102502311	Panel-beauty Rear, Cayenne	1
26	102502313	Panel-beauty Rear, Atlantic	1
27	102502901	Bracket, Canopy Support Left-Hand	1
28	102503001	Bracket, Canopy Support Right-Hand	1
29	102545601	Liner, Rear Underbody Lh	1
30	102545602	Liner, Rear Underbody Right-Hand	1
31	102562101	Tape, Foam Black 12" *	A/R
32	102967901	Rivet, Removable, Tuflok 1/4"	2
33	103499001	Diverter, Precedent Water	1

* Note: Sold by the foot, 12 inches required per side

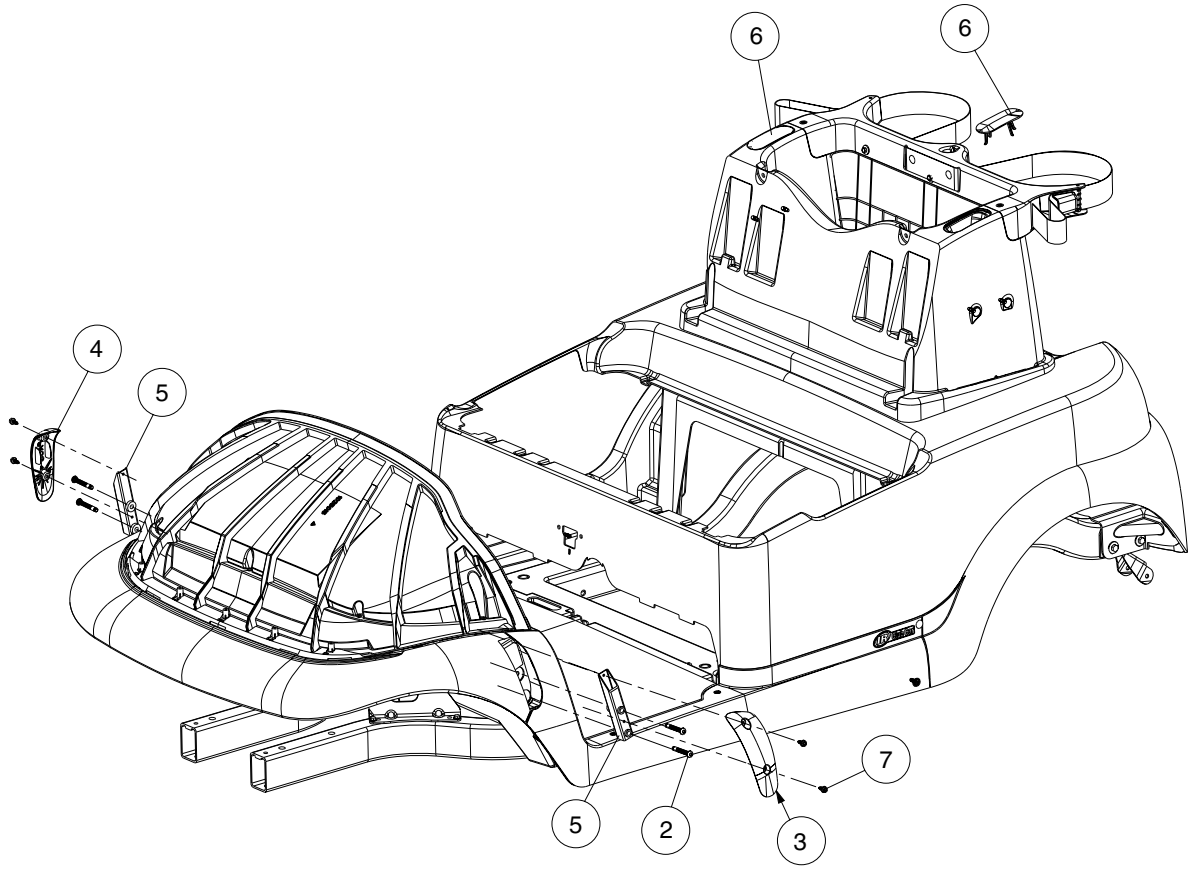

000730-001

UNDERBODY COVERS (VEHICLE WITHOUT CANOPY)

ITEM	PART NO.	DESCRIPTION	QTY
		1 2 3 4	
1	102543901	Kit, Underbody Cover, Gray (includes items 2 through 7)	1
2	102299065	M8-1.25 X 65 Tx Bttn Hd Bolt	4
3	N/A	Cover, Lh Non-canopy, Grey	1
4	N/A	Cover, Rh Non-canopy, Grey	1
5	N/A	Support, Strut Cover	2
6	N/A	SAM Cap	2
7	102544201	Screw, M6 Hex	4
8	102543902	Kit, Underbody Cover, Black (includes items 9 through 14)	1
9	102299065	M8-1.25 X 65 Tx Bttn Hd Bolt	4
10	102400202	Cover, Lh Non-canopy, Blk	1
11	102400302	Cover, Rh Non-canopy, Blk	1
12	N/A	Support, Strut Cover	2
13	N/A	SAM Cap	2
14	102544201	Screw, M6 Hex	4

Note: Sub-components contained in item 8 are the same as those shown for item 1, except for the color of the caps and covers.

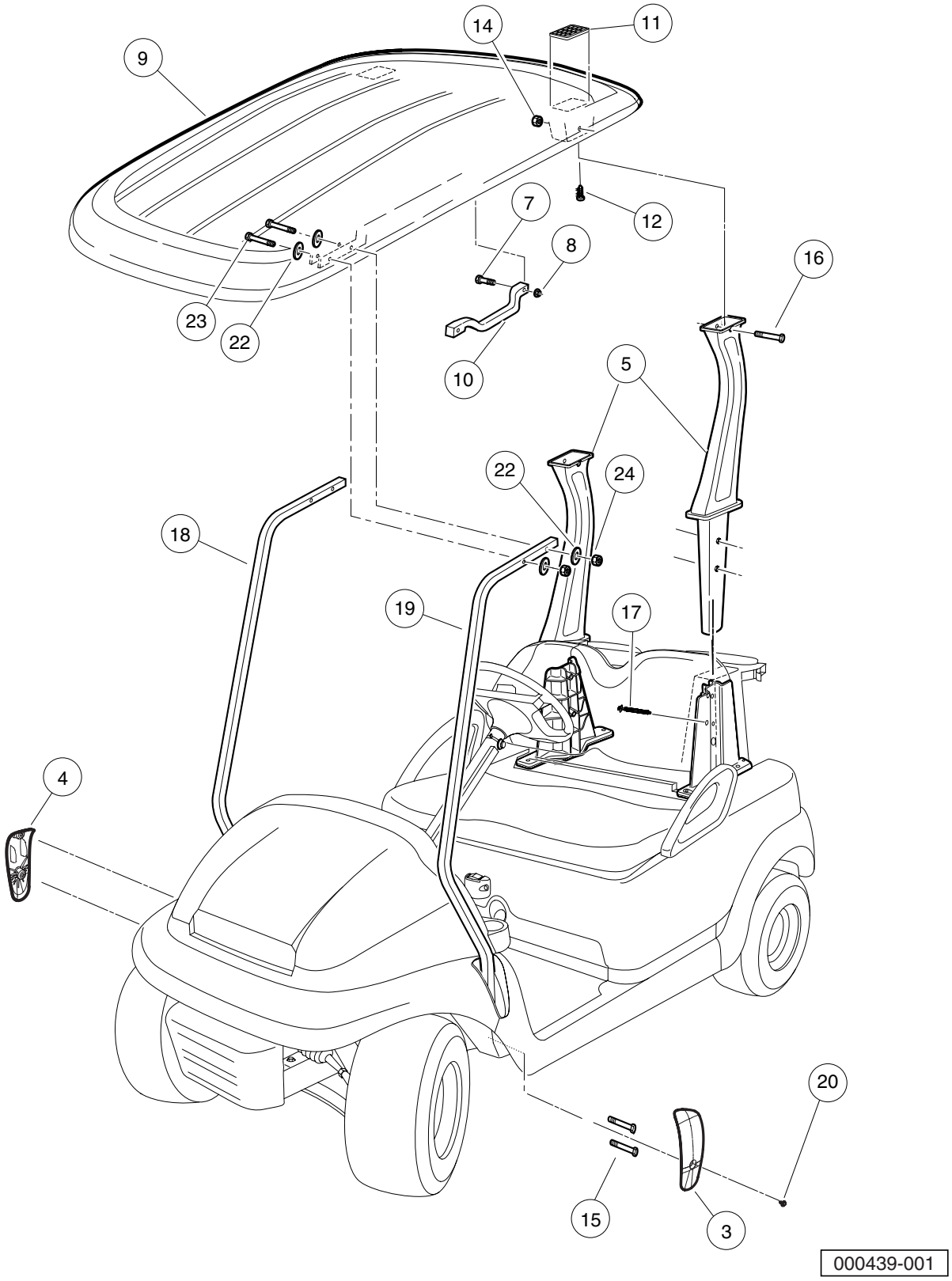
9
14
11
12
7
8
16
23
22
10
5
22
24
18
19
17
4
20
15
3
000439-001

CANOPY – BEIGE

ITEM	PART NO.	DESCRIPTION	QTY
		1 2 3 4	
1	102520702	Kit-canopy, Prec-beige (includes items 2 through 13)	1
2	N/A	Beige Canopy Component Kit (includes items 3 through 6)	1
3	102400002	Cover, Lh Canopy Support, Blk	1
4	102400102	Cover, Rh Canopy Support, Blk	1
5	102513501	Asm-rear Canopy Support	2
6	102524202	Asm-canopy, Beige (includes items 7 through 12)	1
7	102296140	Bolt, Flanged Head, M6x1.0x40	4
8	102296401	Nut-m6x1.0 Flng All Mtl Lock	4
9	102508902	Canopy-beige	1
10	102511602	Handle, Canopy (Beige)	2
11	103205101	Cover, Drain, Canopy, Precedent	2
12	103210101	Screw, #8 X.75, Torx, Tapping	2
13	N/A	Kit, Hardware, Canopy Strut (includes items 14 through 24)	1
14	102298401	Nut,m8,all Metal Lock	2
15	102299065	M8-1.25 X 65 Tx Bttn Hd Bolt	4
16	102299360	Screw, M8-1.25 X 60, Sems, Tx	2
17	102299601	Screw, Pt, K80x70 Hex Flg Hd	2
18	102512401	Support, Canopy Front, Right-Hand	1
19	102513301	Support, Canopy Front Left-Hand	1
20	102544201	Screw, M6 Hex	2
21	102572601	Instr, Kit, Canopy (prec)	1
22	103196001	Washer, Conical Spring, Canopy	8
23	103199301	Bolt - M6 X 1 X 45 Hh Grey	4
24	103200301	Nut, M6 x 1.00	4

Note: Item 21 not shown.

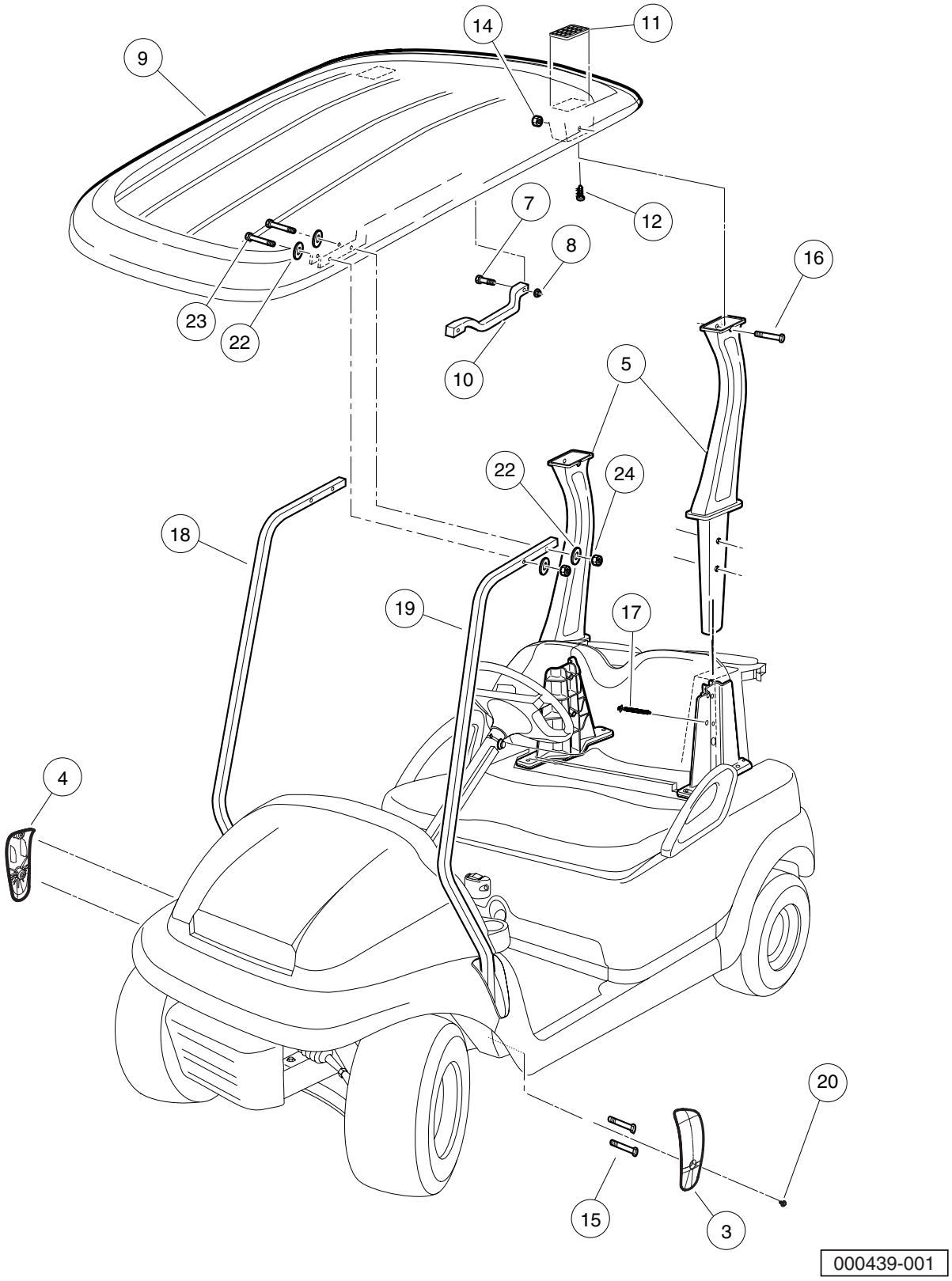
9
14
11
12
7
8
16
23
22
10
5
22
24
18
19
17
4
20
15
3
000439-001

CANOPY – WHITE

ITEM	PART NO.	DESCRIPTION	QTY
		1 2 3 4	
1	102520701	Kit-canopy, Prec-white (includes items 2 through 13)	1
2	N/A	White Canopy Component Kit (includes items 3 through 6)	1
3	102400002	Cover, Lh Canopy Support, Blk	1
4	102400102	Cover, Rh Canopy Support, Blk	1
5	102513501	Asm-rear Canopy Support	2
6	102524201	Asm-canopy, White (includes items 7 through 12)	1
7	102296140	Bolt, Flanged Head, M6x1.0x40	4
8	102296401	Nut-m6x1.0 Flng All Mtl Lock	4
9	102508901	Canopy-white	1
10	102511601	Handle, Canopy (White)	2
11	103205101	Cover, Drain, Canopy, Precedent	2
12	103210101	Screw, #8 X.75, Torx, Tapping	2
13	N/A	Kit, Hardware, Canopy Strut (includes items 14 through 24)	1
14	102298401	Nut,m8,all Metal Lock	2
15	102299065	M8-1.25 X 65 Tx Bttn Hd Bolt	4
16	102299360	Screw, M8-1.25 X 60, Sems, Tx	2
17	102299601	Screw, Pt, K80x70 Hex Flg Hd	2
18	102512401	Support, Canopy Front, Right-Hand	1
19	102513301	Support, Canopy Front Left-Hand	1
20	102544201	Screw, M6 Hex	2
21	102572601	Instr, Kit, Canopy (prec)	1
22	103196001	Washer, Conical Spring, Canopy	8
23	103199301	Bolt - M6 X 1 X 45 Hh Grey	4
24	103200301	Nut, M6 x 1.00	4

Note: Item 21 not shown.

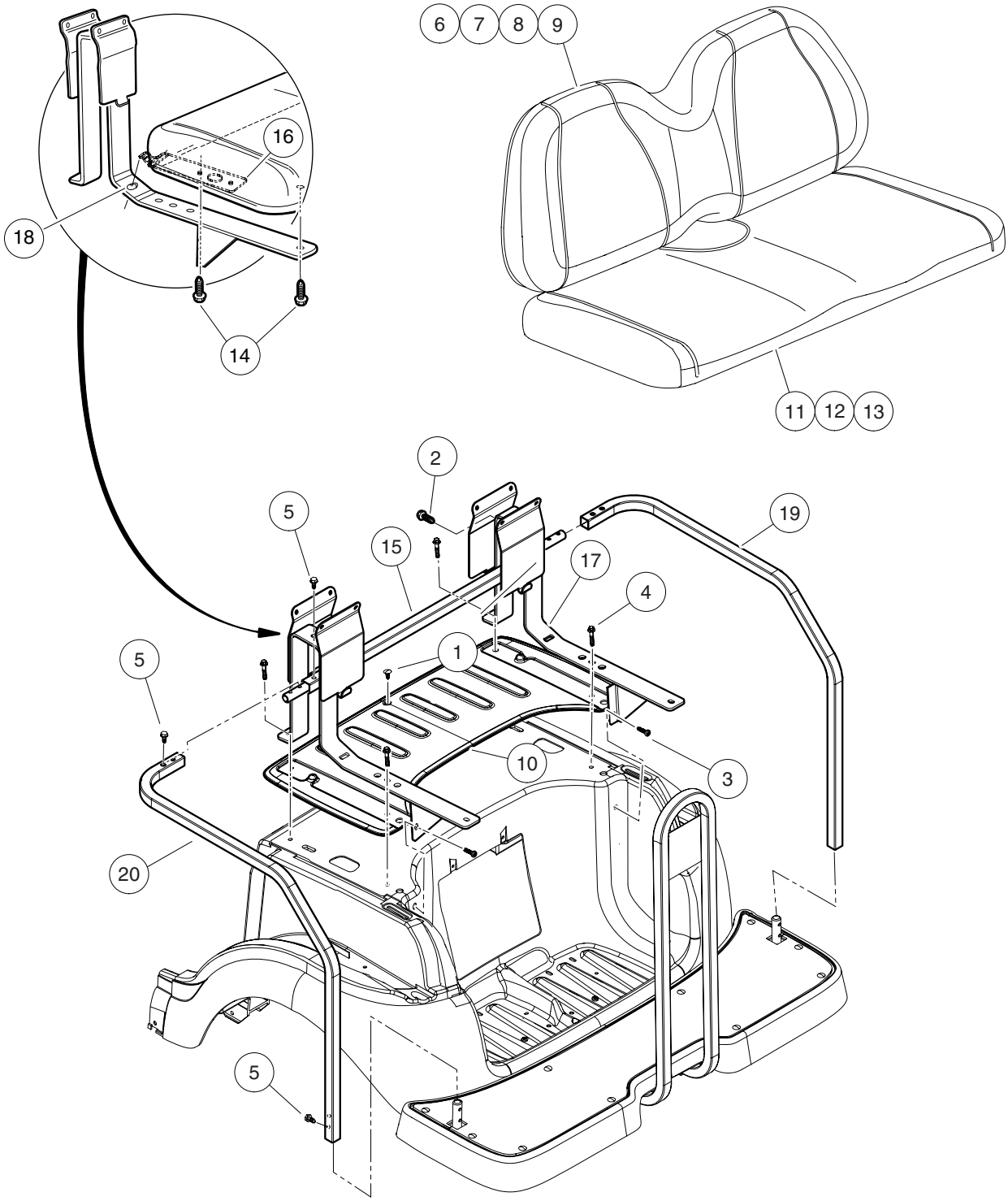

000494-001

REAR SEAT – PRECEDENT VILLAGER 4 AND I2 4 PASSENGER

ITEM	PART NO.	DESCRIPTION	QTY
		1 2 3 4	
1	1010434	Barrel - Plastic	10
2	102296530	Screw - M6 X 1.0 X 30 Sems	4
3	102298030	Screw, K80x30, Torx Pn Hd Pt	2
4	102298240	Bolt, Flange Head, M8-1.25 X 40	A/R
5	102298720	M8-1.25x20 Taptite	10
6	102503221	Service Backrest Asm, Beige	1
7	102503222	Service Backrest Asm, White	1
8	102503224	Service Backrest Asm, Gray	1
9	102503225	Service Backrest Asm-black	1
10	102531501	Cover, 4-pass Ns1 Underbody	1
11	102531701	4-Passenger Rear Seat Bottom, Beige	1
12	102531702	4-Passenger Rear Seat Bottom, White	1
13	102531704	4-Passenger Rear Seat Bottom, Gray	1
14	102541425	Bolt-m6x1.0x25 Hex Flhd, Blk-l	4
15	102572201	Connector Tube-hand Rail Asm	1
16	102573101	Bracket, 4-pass Lower Seat	2
17	102574801	Support-rh 4 Passenger Seat	1
18	102574901	Support-lh 4 Passenger Seat	1
19	102575101	Restraint- Rh 4-passenger Hip	1
20	102575201	Restraint- Lh 4-passenger Hip	1
		Note: See also four-passenger kit information.	

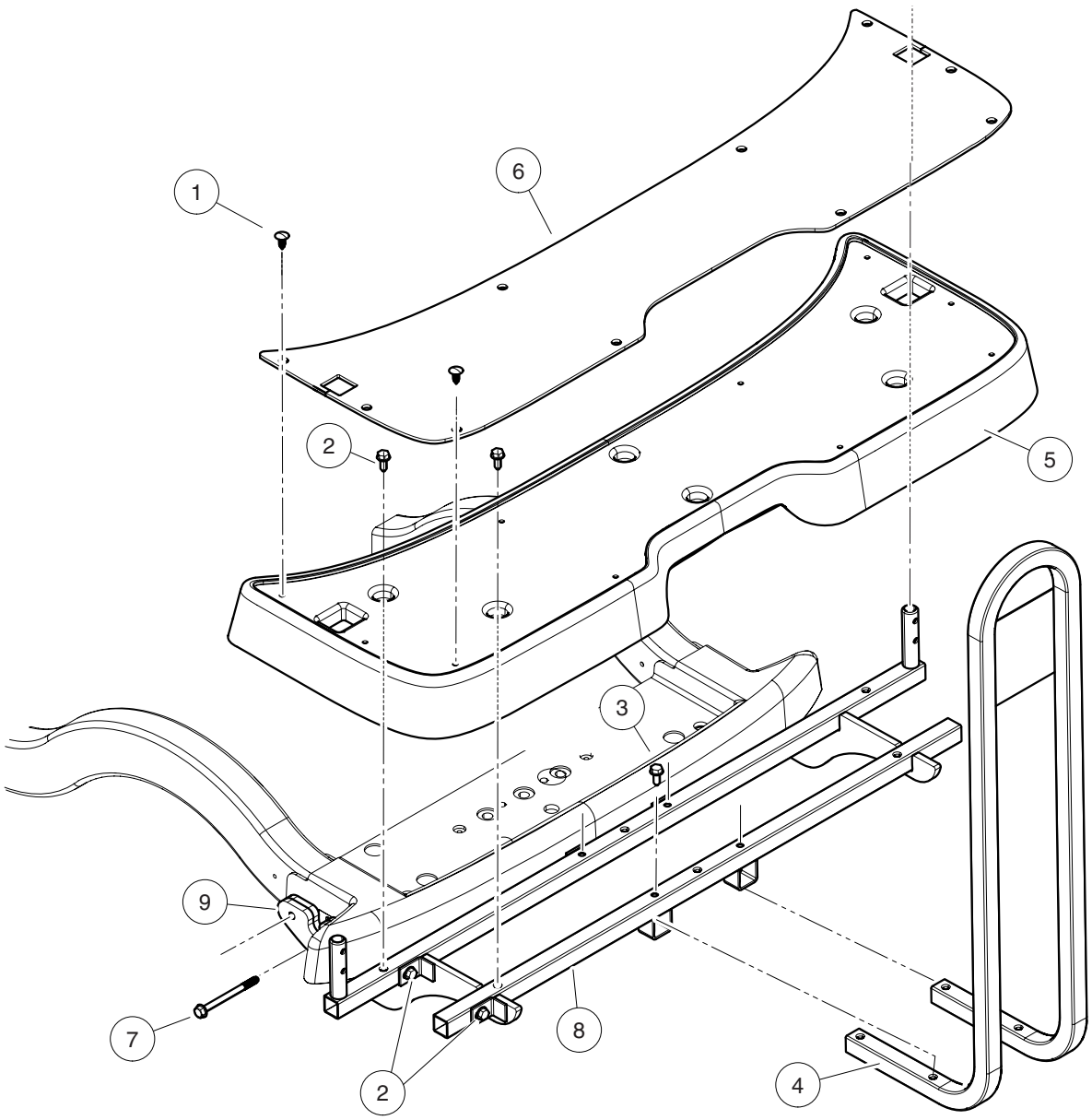

000493-001

REAR FOOTREST ASSEMBLY – PRECEDENT VILLAGER 4 AND I2 4 PASSENGER

ITEM	PART NO.	DESCRIPTION	QTY
		1 2 3 4	
1	1010434	Barrel - Plastic	10
2	102298720	M8-1.25x20 Taptite	8
3	102298745	M8-1.25x45 Taptite	4
4	102531001	Handrail Weldment, Rear Seat	1
5	102531402	Footdeck, 4-Passenger, Black	1
6	102531601	Floormat, 4-Passenger, Rear	1
7	102534201	Bolt - Fl Hd, M8 X 95	4
8	102584701	Weld, 4-pass Footdeck-a	1
9	102584801	Weld, 4-pass Footdeck-b	1

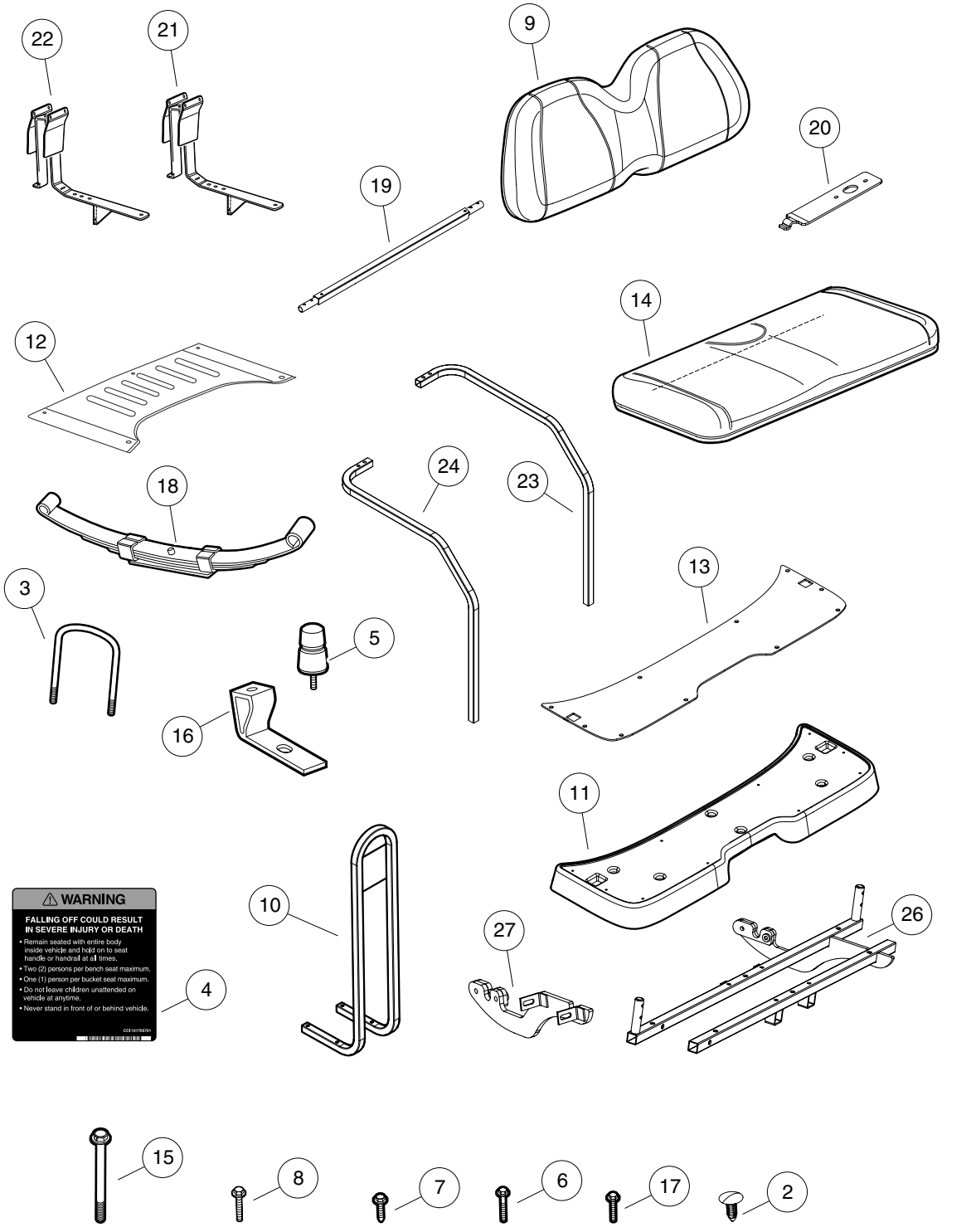
22
21
9
20
19
14
12
24
23
18
13
3
5
16
11
10
27
26
4
WARNING
FALLING OFF COULD RESULT IN SEVERE INJURY OR DEATH
• Remain seated with entire body inside vehicle and hold on to seat handle or handrail at all times.
• Two (2) persons per bench seat maximum.
• One (1) person per bucket seat maximum.
• Do not leave children unattended on vehicle at anytime.
• Never stand in front of or behind vehicle.
15
8
7
6
17
2

000505-001

FOUR PASSENGER CONVERSION KIT – BEIGE

ITEM	PART NO.	DESCRIPTION	QTY
		1 2 3 4	
1	102570901	Kit-4-pass, Prec, Std, Beige (includes items 2 through 27)	1
2	1010434	Barrel - Plastic	11
3	1014902	U-Bolt	2
4	101705701	Decal, Warning	1
5	1017235	Bumper, Jounce	2
6	102296530	Screw - M6 X 1.0 X 30 Sems	4
7	102298720	M8-1.25x20 Taptite	18
8	102298745	M8-1.25x45 Taptite	4
9	102503221	Service Backrest Asm, Beige	1
10	102531001	Handrail Weldment, Rear Seat	1
11	102531402	Footdeck, 4-Passenger, Black	1
12	102531501	Cover, 4-pass Ns1 Underbody	1
13	102531601	Floormat, 4-Passenger, Rear	1
14	102531701	4-Passenger Rear Seat Bottom, Beige	1
15	102534201	Bolt - Fl Hd, M8 X 95	4
16	102534801	Jounce Bumper Bracket	2
17	102541425	Bolt-m6x1.0x25 Hex Flhd, Blk-l	6
18	102544901	Spril, Leaf, Rear	2
19	102572201	Connector Tube-hand Rail Asm	1
20	102573101	Bracket, 4-pass Lower Seat	2
21	102574801	Support-rh 4 Passenger Seat	1
22	102574901	Support-lh 4 Passenger Seat	1
23	102575101	Restraint- Rh 4-passenger Hip	1
24	102575201	Restraint- Lh 4-passenger Hip	1
25	102577401	Instructions-4 Pass Field	1
26	102584701	Weld, 4-pass Footdeck-a	1
27	102584801	Weld, 4-pass Footdeck-b	1

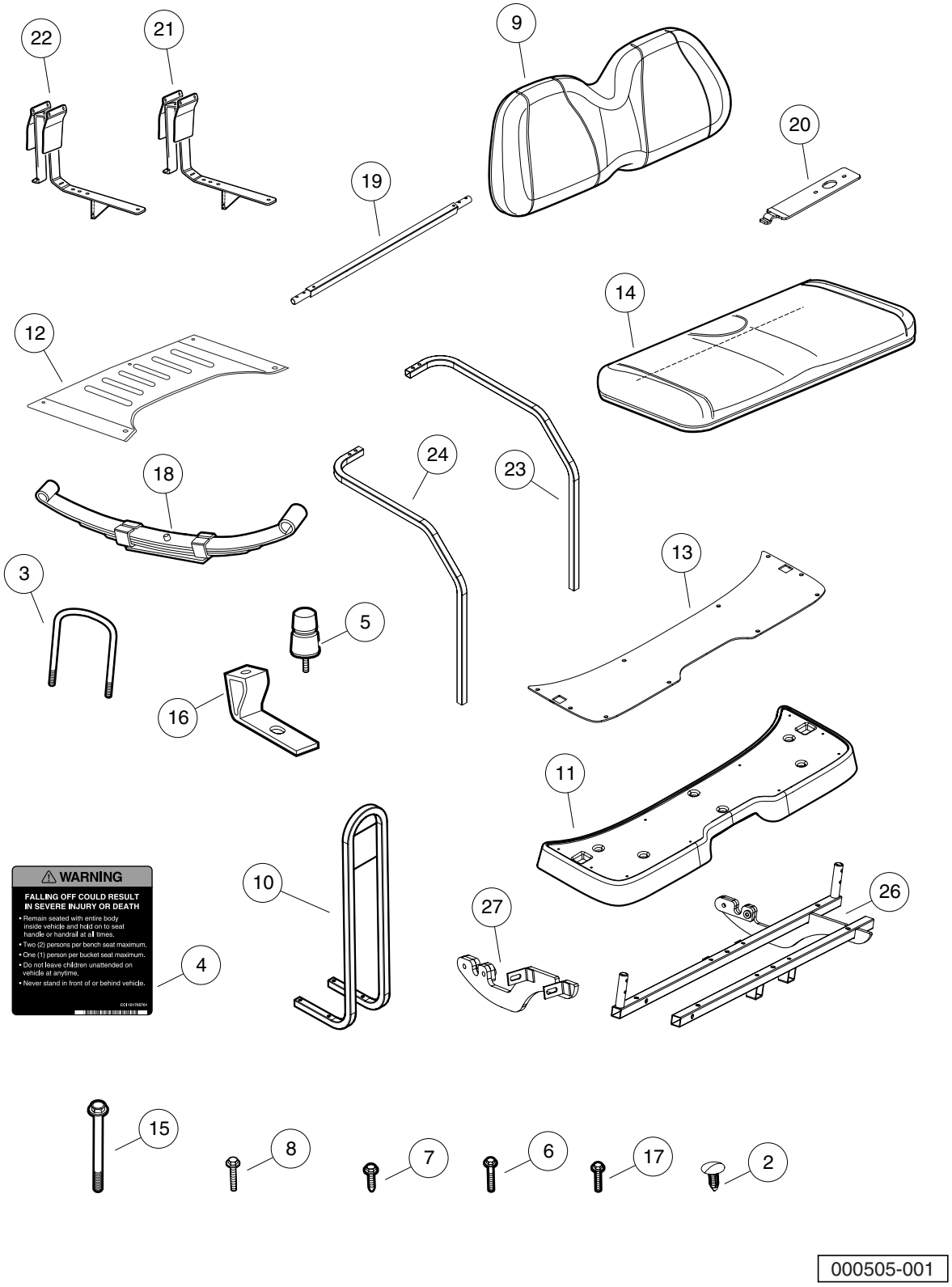
22
21
9
20
19
14
12
24
23
18
13
3
5
16
11
10
27
26
4
WARNING
FALLING OFF COULD RESULT IN SEVERE INJURY OR DEATH
• Remain seated with entire body inside vehicle and hold on to seat handle or handrail at all times.
• Two (2) persons per bench seat maximum.
• One (1) person per bucket seat maximum.
• Do not leave children unattended on vehicle at anytime.
• Never stand in front of or behind vehicle.
15
8
7
6
17
2

000505-001

FOUR PASSENGER CONVERSION KIT – WHITE

ITEM	PART NO.	DESCRIPTION	QTY
		1 2 3 4	
1	102570902	Kit-4-pass, Prec, Std, White (includes items 2 through 27)	1
2	1010434	Barrel - Plastic	11
3	1014902	U-Bolt	2
4	101705701	Decal, Warning	1
5	1017235	Bumper, Jounce	2
6	102296530	Screw - M6 X 1.0 X 30 Sems	4
7	102298720	M8-1.25x20 Taptite	18
8	102298745	M8-1.25x45 Taptite	4
9	102503222	Service Backrest Asm, White	1
10	102531001	Handrail Weldment, Rear Seat	1
11	102531402	Footdeck, 4-Passenger, Black	1
12	102531501	Cover, 4-pass Ns1 Underbody	1
13	102531601	Floormat, 4-Passenger, Rear	1
14	102531702	4-Passenger Rear Seat Bottom, White	1
15	102534201	Bolt - Fl Hd, M8 X 95	4
16	102534801	Jounce Bumper Bracket	2
17	102541425	Bolt-m6x1.0x25 Hex Flhd, Blk-l	6
18	102544901	Spril, Leaf, Rear	2
19	102572201	Connector Tube-hand Rail Asm	1
20	102573101	Bracket, 4-pass Lower Seat	2
21	102574801	Support-rh 4 Passenger Seat	1
22	102574901	Support-lh 4 Passenger Seat	1
23	102575101	Restraint- Rh 4-passenger Hip	1
24	102575201	Restraint- Lh 4-passenger Hip	1
25	102577401	Instructions-4 Pass Field	1
26	102584701	Weld, 4-pass Footdeck-a	1
27	102584801	Weld, 4-pass Footdeck-b	1

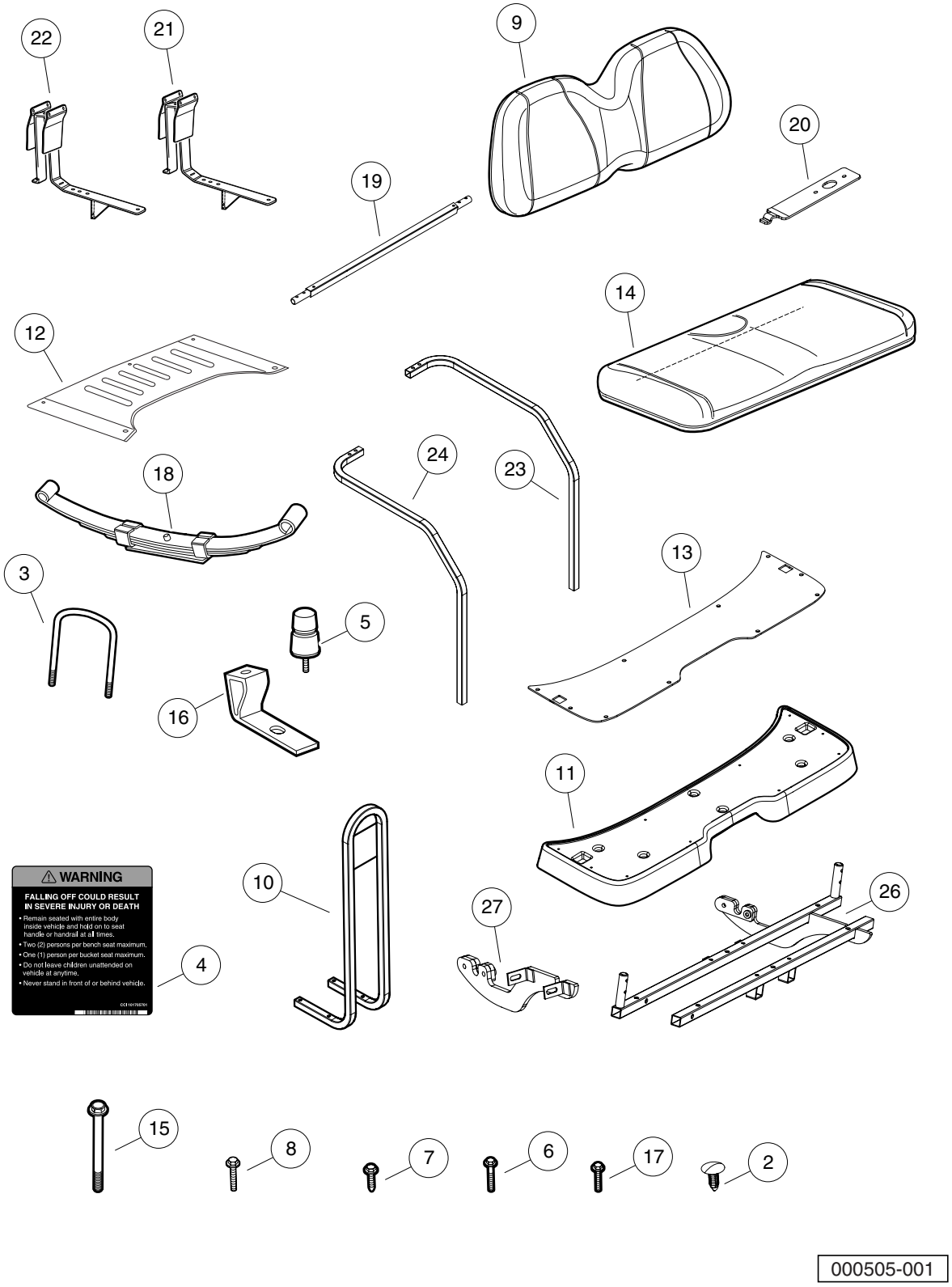
22
21
9
20
19
14
12
24
23
18
13
3
5
16
11
10
27
26
4
WARNING
FALLING OFF COULD RESULT IN SEVERE INJURY OR DEATH
• Remain seated with entire body inside vehicle and hold on to seat handle or handrail at all times.
• Two (2) persons per bench seat maximum.
• One (1) person per bucket seat maximum.
• Do not leave children unattended on vehicle at anytime.
• Never stand in front of or behind vehicle.
15
8
7
6
17
2

000505-001

FOUR PASSENGER CONVERSION KIT – GRAY

ITEM	PART NO.	DESCRIPTION	QTY
		1 2 3 4	
1	102570904	Kit, 4 Passenger, Precedent, Std, Gray (includes items 2 through 27)	1
2	1010434	Barrel - Plastic	11
3	1014902	U-Bolt	2
4	101705701	Decal, Warning	1
5	1017235	Bumper, Jounce	2
6	102296530	Screw - M6 X 1.0 X 30 Sems	4
7	102298720	M8-1.25x20 Taptite	18
8	102298745	M8-1.25x45 Taptite	4
9	102503224	Service Backrest Asm, Gray	1
10	102531001	Handrail Weldment, Rear Seat	1
11	102531402	Footdeck, 4-Passenger, Black	1
12	102531501	Cover, 4-pass Ns1 Underbody	1
13	102531601	Floormat, 4-Passenger, Rear	1
14	102531704	4-Passenger Rear Seat Bottom, Gray	1
15	102534201	Bolt - Fl Hd, M8 X 95	4
16	102534801	Jounce Bumper Bracket	2
17	102541425	Bolt-m6x1.0x25 Hex Flhd, Blk-l	6
18	102544901	Spril, Leaf, Rear	2
19	102572201	Connector Tube-hand Rail Asm	1
20	102573101	Bracket, 4-pass Lower Seat	2
21	102574801	Support-rh 4 Passenger Seat	1
22	102574901	Support-lh 4 Passenger Seat	1
23	102575101	Restraint- Rh 4-passenger Hip	1
24	102575201	Restraint- Lh 4-passenger Hip	1
25	102577401	Instructions-4 Pass Field	1
26	102584701	Weld, 4-pass Footdeck-a	1
27	102584801	Weld, 4-pass Footdeck-b	1

1

G

E

WHEEL AND TIRES

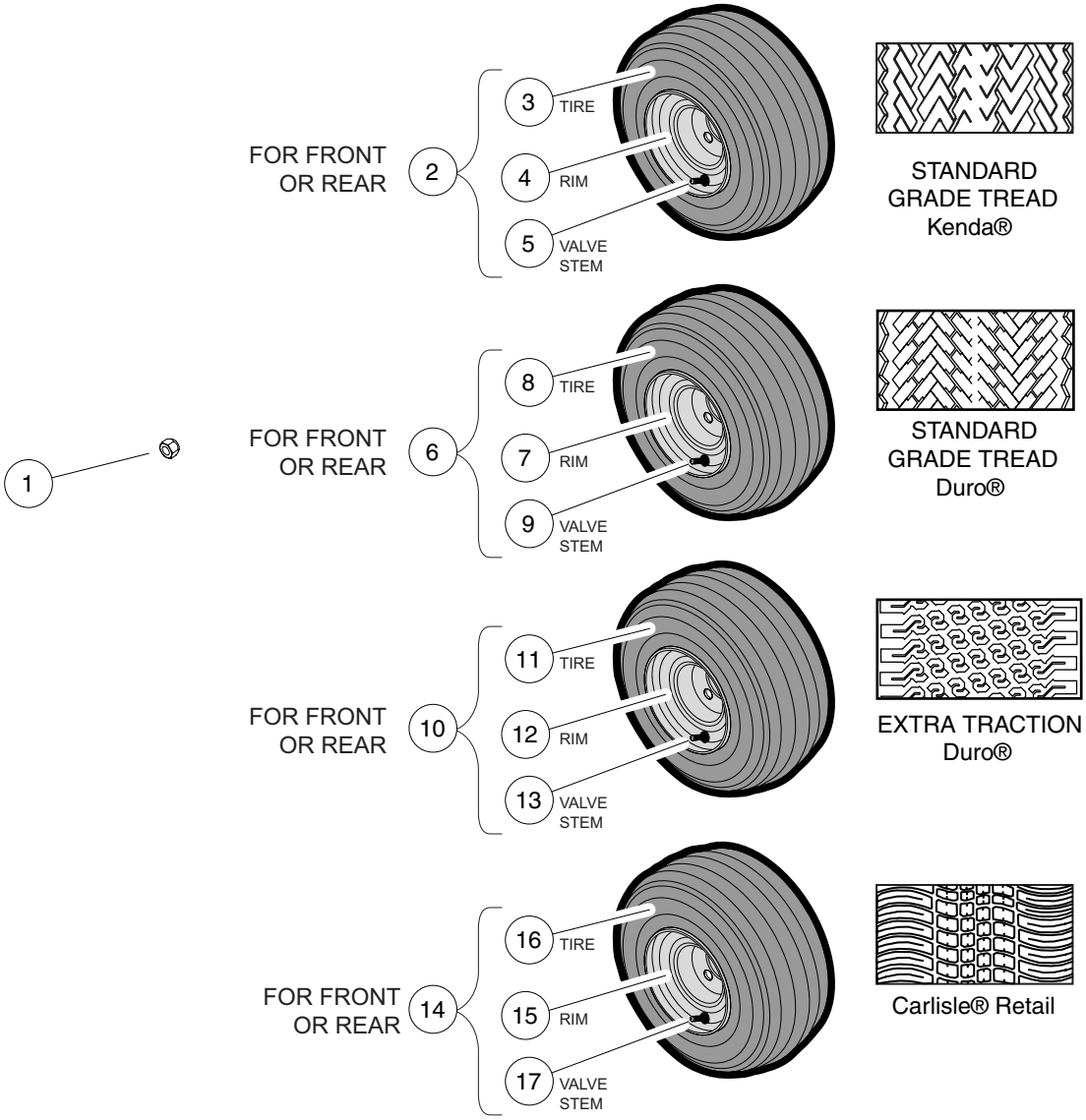
1
FOR FRONT OR REAR
2
3 TIRE
4 RIM
5 VALVE STEM
STANDARD GRADE TREAD Kenda®
FOR FRONT OR REAR
6
8 TIRE
7 RIM
9 VALVE STEM
STANDARD GRADE TREAD Duro®
FOR FRONT OR REAR
10
11 TIRE
12 RIM
13 VALVE STEM
EXTRA TRACTION Duro®
FOR FRONT OR REAR
14
16 TIRE
15 RIM
17 VALVE STEM
Carlisle® Retail

000474-003

WHEELS AND TIRES – PROFESSIONAL AND I2

ITEM	PART NO.	DESCRIPTION	QTY
		1 2 3 4	
1	1010984	.500-20 Unf Lug Nut	16
2	102522601	Asm-Kenda Std Gray (includes items 3 through 5)	4
3	103458601	Tire, Kenda Hole-n-1, Xt	1
4	103459101	Wheel Rim Asm, 8"x7", Silver	1
5	7310	Valve Stem	1
6	102522604	Asm - Duro Std Gray (includes items 7 through 9)	4
7	102557801	Wheel Rim Asm, 8" X 7.000"	1
8	102569304	Duro 18 X 8.5 X 8, 4-Ply	1
9	7310	Valve Stem	1
10	102522605	Asm - Duro Extra Tract Gray (includes items 11 through 13)	4
11	101769302	Tire, Unmounted Xtrac 18 x 8.50-8	1
12	102557801	Wheel Rim Asm, 8" X 7.000"	1
13	7310	Valve Stem	1
14	102522609	Asm-carlisle Retail (includes items 15 through 17)	2
15	102557801	Wheel Rim Asm, 8" X 7.000"	1
16	102569309	Carlisle 18 X 8.50 R8	1
17	7310	Valve Stem	1

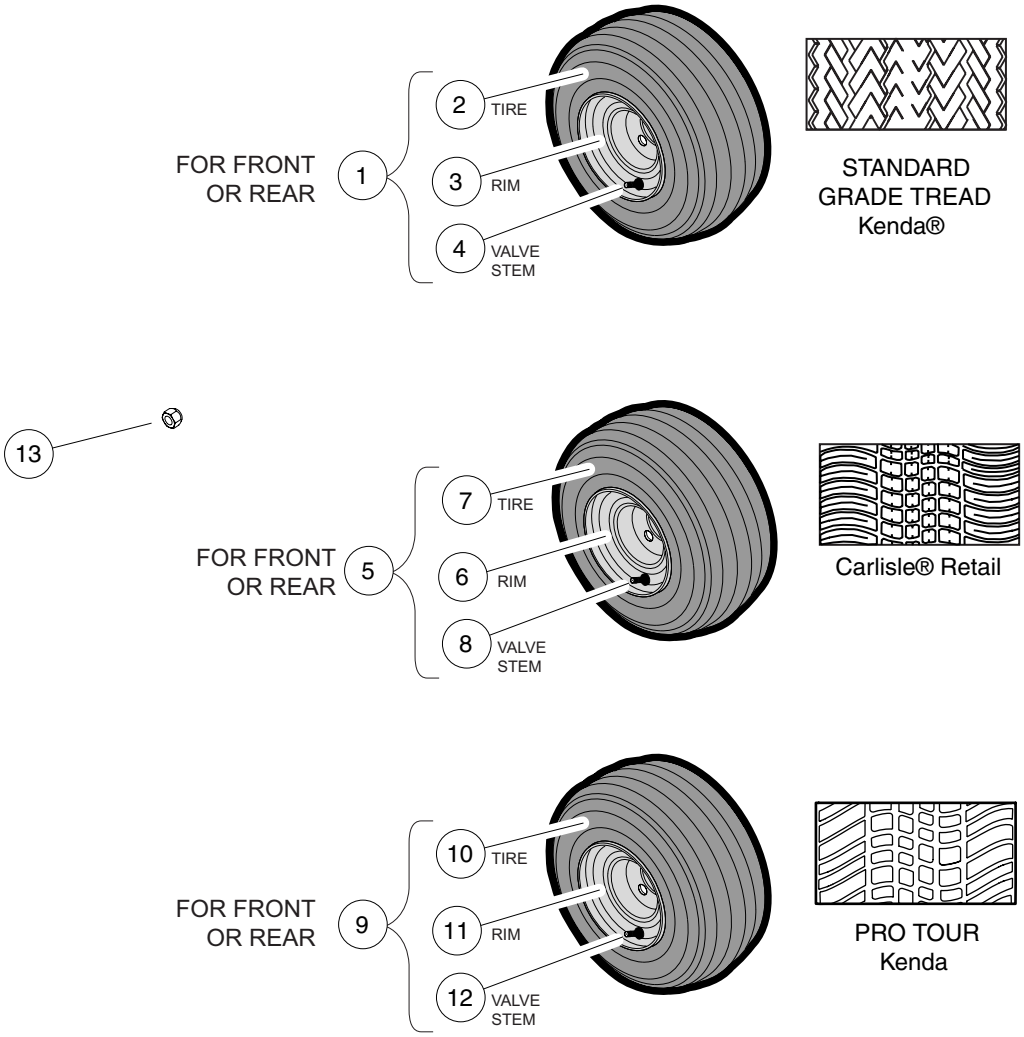
FOR FRONT OR REAR
1
2
TIRE
3
RIM
4
VALVE STEM
STANDARD GRADE TREAD Kenda®
13
FOR FRONT OR REAR
5
7
TIRE
6
RIM
8
VALVE STEM
Carlisle® Retail
FOR FRONT OR REAR
9
10
TIRE
11
RIM
12
VALVE STEM
PRO TOUR Kenda

000475-003

WHEELS AND TIRES – CHAMPION AND I2L

ITEM	PART NO.	DESCRIPTION	QTY
		1 2 3 4	
1	102522601	Asm-Kenda Std Gray (includes items 2 through 4)	4
2	103458601	Tire, Kenda Hole-n-1, Xt	1
3	103459101	Wheel Rim Asm, 8"x7", Silver	1
4	7310	Valve Stem	1
5	102522609	Asm-carlisle Retail (includes items 6 through 8)	4
6	102557801	Wheel Rim Asm, 8" X 7.000"	1
7	102569309	Carlisle 18 X 8.50 R8	1
8	7310	Valve Stem	1
9	102540601	Tire and Wheel, Aluminum (includes items 10 through 12)	4
10	102556701	Tire, Pro Tour, 205-50 X 10	1
11	102556801	Wheel, ChampionsAluminum'	1
12	7310	Valve Stem	1
13	102540701	Lug Nut, 1/2" Closed End	16

2

G

E

DECALS

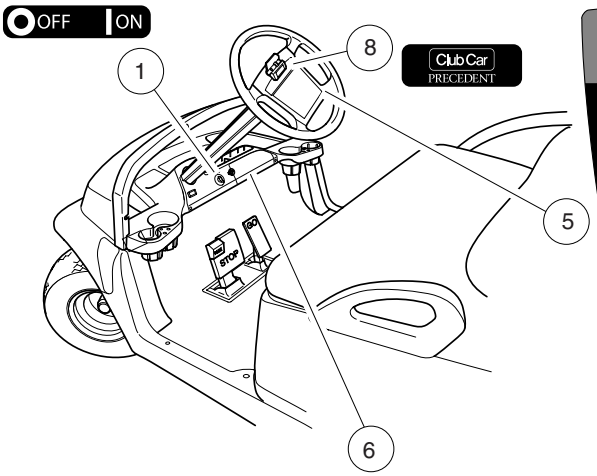

OPERATING INSTRUCTIONS

- Read owner's manual and safety warnings located on dash panel prior to driving.
- Study and understand controls.

TO OPERATE

- Turn wheels to desired direction and ensure path is clear.
- Turn key to ON position.
- While stopped, place shift lever in desired position:

F – Forward N – Neutral R – Reverse (Buzzer will sound)

- Park brake will release and vehicle will start moving when accelerator pedal is pressed.
- Slowly press accelerator pedal to increase speed.
- To stop, release accelerator pedal and press brake pedal.

BEFORE LEAVING

- Press park brake pedal until it locks and holds vehicle.
- Place Forward/Reverse switch in NEUTRAL position.
- Turn key OFF and remove key when not in use.

CCI 102519201

⚠ WARNING

ROLLOVER OR FALLING OFF MAY CAUSE SERIOUS INJURY OR DEATH.

- Before using vehicle, read operating instructions.
- Do not start vehicle until all occupants are seated.
- Keep entire body inside vehicle while moving.
- Drive slowly in turns and straight up and down slopes.
- Use brakes to reduce speed when coasting downhill.
- Never operate under the influence of alcohol or drugs.
- For use by authorized persons in designated areas only.
- Remain seated while moving.
- Operate from driver side only.
- Never operate on public roads.
- Hold on to seat handle while moving.
- Two (2) persons per seat maximum.
- Never stand in front of or behind vehicle.
- Do not leave children unattended on vehicle.

CCI 102519301

⚠ WARNING

BATTERY EXPLOSION / FIRE CAN CAUSE SEVERE INJURY

- Do not contact positive (+) battery post or cable to frame.
- Disconnect negative (–) cable first.
- Negative (–) frame ground.

CCI 102517901

⚠ WARNING

CAN CAUSE SEVERE INJURY

Rotating parts

HOT manifold & muffler

KEEP CLEAR

CCI 101960501

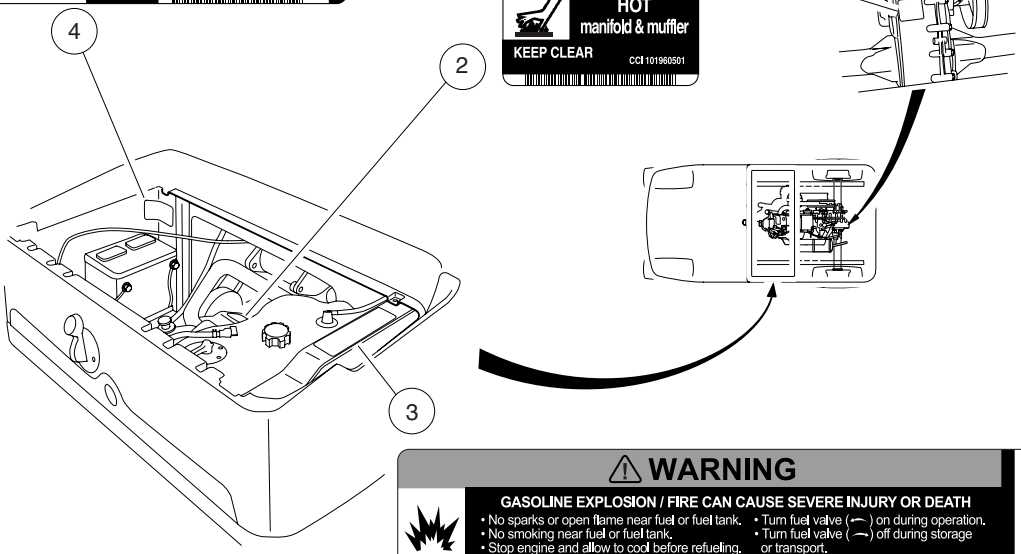

⚠ WARNING

GASOLINE EXPLOSION / FIRE CAN CAUSE SEVERE INJURY OR DEATH

- No sparks or open flame near fuel or fuel tank.
- No smoking near fuel or fuel tank.
- Stop engine and allow to cool before refueling.
- Turn fuel valve ( ) on during operation.
- Turn fuel valve ( ) off during storage or transport.

EXCESSIVE SPEED CAN CAUSE SEVERE INJURY OR DEATH

- Do not tamper with engine governor adjustment.

CCI 102517801

CE

000444-001

DECALS – GASOLINE VEHICLE

ITEM	PART NO.	DESCRIPTION	QTY
		1 2 3 4	
1	101825101	Decal, Off/On	1
2	101960501	Decal, Rotating Parts/Hot Manifold	2
3	102517801	Decal, Warning - Gas and Govenor	1
4	102517901	Decal, Warning - Frame Ground	1
5	102519201	Decal, Operating Instr, Gas	1
6	102519301	Decal, Warning, Rollover	1
7	102538101	Decal, Operating Instructions	1
8	102540901	Decal, Club Car Clip	1

Note: Item 7 not shown.

IMPORTANT NOTICE

This vehicle does not conform to ANSI Z130.1 - "Standard for Golf Cars - Safety and Performance Requirements" because it is capable of speeds in excess of 15 miles per hour. Exercise caution.

CCI 102555901

OPERATING INSTRUCTIONS

- Read owner's manual and dash-mounted safety warnings prior to driving.
- Study and understand controls.

TO OPERATE

- Turn wheels to desired direction and ensure path is clear.
- Turn key to ON position.
- While stopped, place Forward/Reverse switch in desired position:

F – Forward N – Neutral R – Reverse (Buzzer will sound)

- Park brake will release and vehicle will start moving when accelerator pedal is pressed.
- Slowly press accelerator pedal to increase speed.
- To stop, release accelerator pedal and press brake pedal.

BEFORE LEAVING

- Press park brake pedal until it locks and holds vehicle.
- Place Forward/Reverse switch in NEUTRAL position.
- Turn key OFF and remove key when not in use.

MOTOR BRAKING

- Electric motor braking provides speed regulation functions.
- For parked vehicle, beeping alarm indicates vehicle roll away.
- In operation, beeping alarm indicates reduction in motor braking.
- Apply brakes to further reduce vehicle speed as required.
- System is activated only when tow switch is in the RUN position.
- When towing this vehicle, tow switch must be in the TOW position.

CCI 102518001

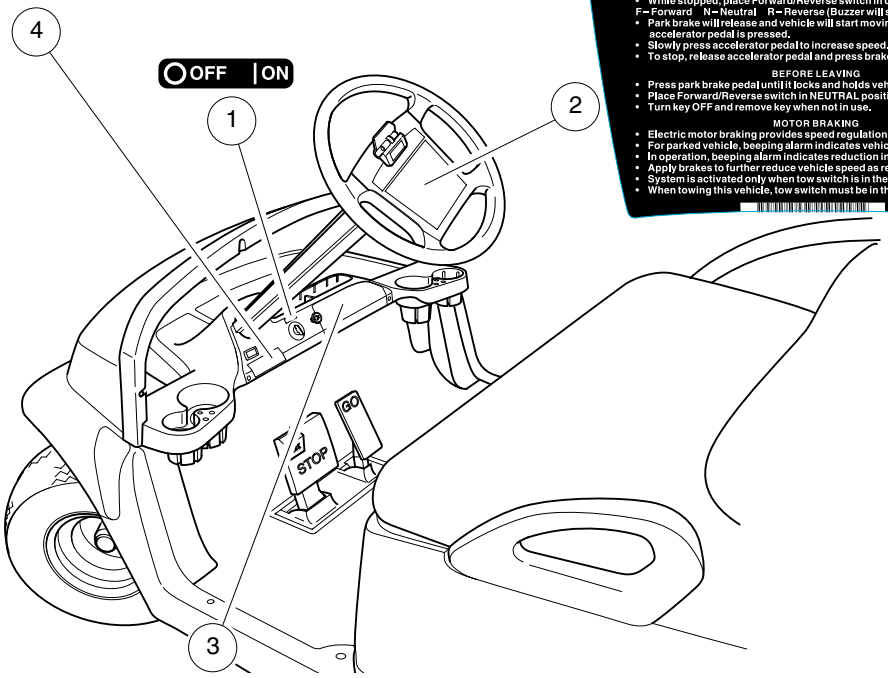

⚠ WARNING

ROLLOVER OR FALLING OFF MAY CAUSE SERIOUS INJURY OR DEATH.

- Before using vehicle, read operating instructions.
- Do not start vehicle until all occupants are seated.
- Keep entire body inside vehicle while moving.
- Drive slowly in turns and straight up and down slopes.
- Use brakes to reduce speed when coasting downhill.
- Never operate under the influence of alcohol or drugs.
- For use by authorized persons in designated areas only.
- Remain seated while moving.
- Operate from driver side only.
- Never operate on public roads.
- Hold on to seat handle while moving.
- Two (2) persons per seat maximum.
- Never stand in front of or behind vehicle.
- Do not leave children unattended on vehicle.

CCI 102519301

000441-002

DECALS – ELECTRIC VEHICLE, STYLES A, B, AND C

ITEM	PART NO.	DESCRIPTION	QTY
		1 2 3 4	
1	101825101	Decal, Off/On	1
2	102518001	Decal, Operating Instr, Elec	1
3	102519301	Decal, Warning, Rollover	1
4	102555901	Decal, Private Speed, Prec	1

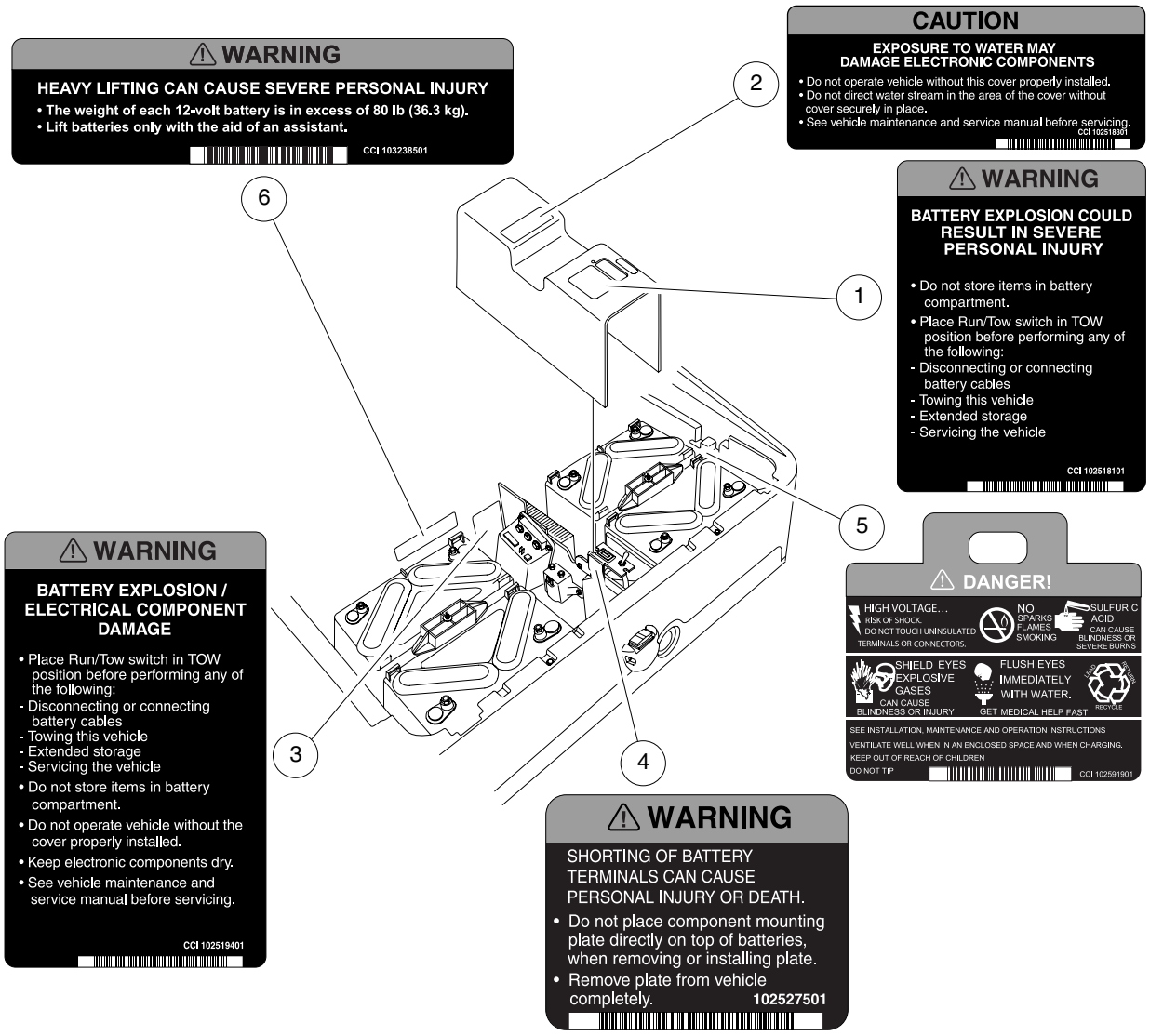
WARNING
HEAVY LIFTING CAN CAUSE SEVERE PERSONAL INJURY
• The weight of each 12-volt battery is in excess of 80 lb (36.3 kg).
• Lift batteries only with the aid of an assistant.
CCI 103238501
CAUTION
EXPOSURE TO WATER MAY DAMAGE ELECTRONIC COMPONENTS
• Do not operate vehicle without this cover properly installed.
• Do not direct water stream in the area of the cover without cover securely in place.
• See vehicle maintenance and service manual before servicing.
CCI 102518301
WARNING
BATTERY EXPLOSION COULD RESULT IN SEVERE PERSONAL INJURY
• Do not store items in battery compartment.
• Place Run/Tow switch in TOW position before performing any of the following:
- Disconnecting or connecting battery cables
- Towing this vehicle
- Extended storage
- Servicing the vehicle
CCI 102518101
WARNING
BATTERY EXPLOSION / ELECTRICAL COMPONENT DAMAGE
• Place Run/Tow switch in TOW position before performing any of the following:
- Disconnecting or connecting battery cables
- Towing this vehicle
- Extended storage
- Servicing the vehicle
• Do not store items in battery compartment.
• Do not operate vehicle without the cover properly installed.
• Keep electronic components dry.
• See vehicle maintenance and service manual before servicing.
CCI 102519401
DANGER!
HIGH VOLTAGE... RISK OF SHOCK. DO NOT TOUCH UNINSULATED TERMINALS OR CONNECTORS.
NO SPARKS FLAMES SMOKING
SULFURIC ACID CAN CAUSE BLINDNESS OR SEVERE BURNS
SHIELD EYES EXPLOSIVE GASES CAN CAUSE BLINDNESS OR INJURY
FLUSH EYES IMMEDIATELY WITH WATER. GET MEDICAL HELP FAST
RECYCLE
SEE INSTALLATION, MAINTENANCE AND OPERATION INSTRUCTIONS
VENTILATE WELL WHEN IN AN ENCLOSED SPACE AND WHEN CHARGING.
KEEP OUT OF REACH OF CHILDREN
DO NOT TIP
CCI 102591901
WARNING
SHORTING OF BATTERY TERMINALS CAN CAUSE PERSONAL INJURY OR DEATH.
• Do not place component mounting plate directly on top of batteries, when removing or installing plate.
• Remove plate from vehicle completely.
102527501
1
2
3
4
5
6

000441-003

DECALS – ELECTRIC VEHICLE, STYLE A

ITEM	PART NO.	DESCRIPTION	QTY
		1 2 3 4	
1	102518101	Decal, Run/Tow with Storage Area	1
2	102518301	Decal, Caution, Electrical Component Cover	1
3	102519401	Decal, Run/Tow Safety, IQ	1
4	102527501	Decal-component Mounting Plate	1
5	102591901	Warning Tag, Battery, SPWS (For SPWS Accessory)	4
6	103238501	Decal, Warning -battery Weight	1

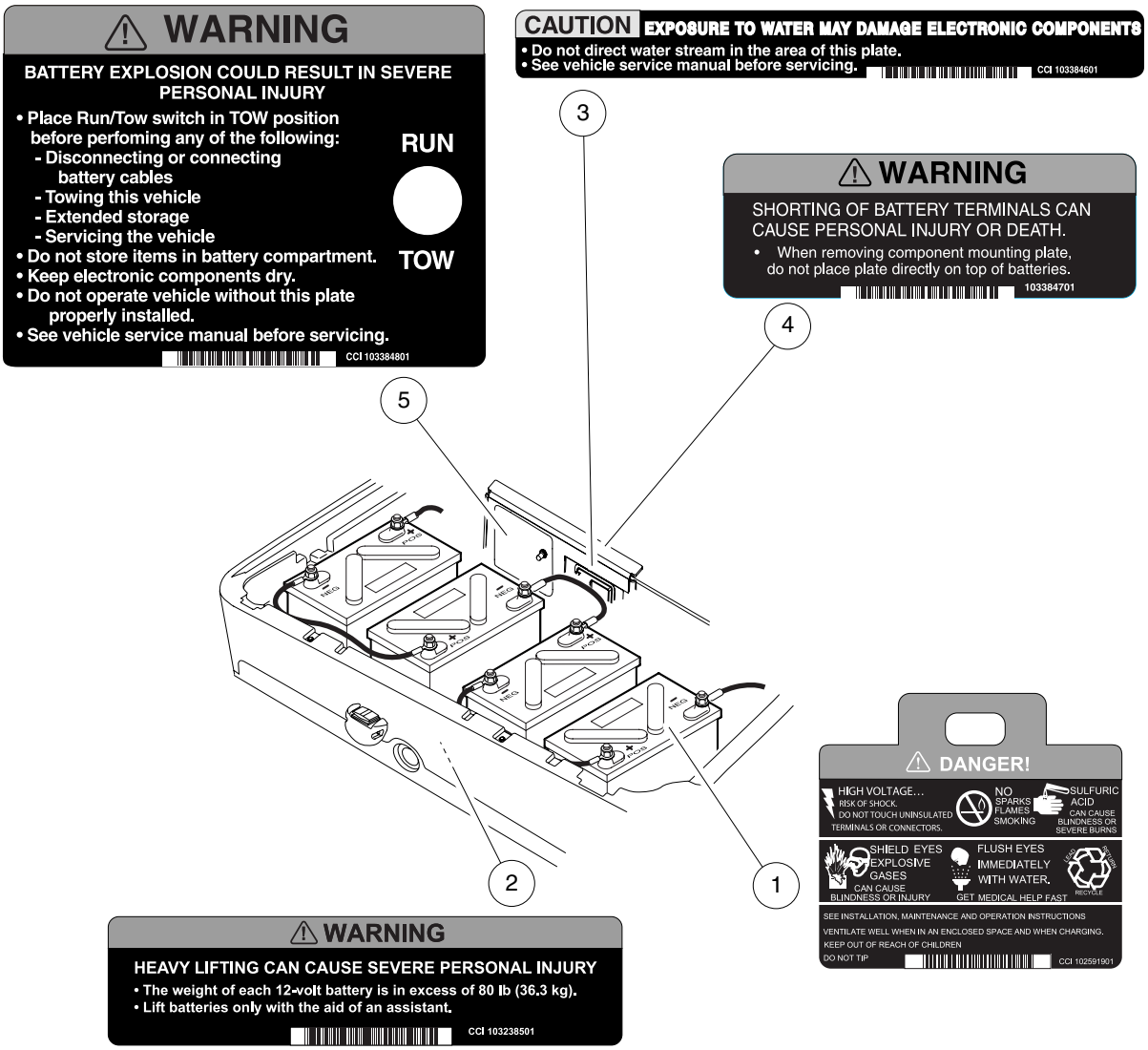
WARNING
BATTERY EXPLOSION COULD RESULT IN SEVERE PERSONAL INJURY
• Place Run/Tow switch in TOW position before perfoming any of the following:
- Disconnecting or connecting battery cables
- Towing this vehicle
- Extended storage
- Servicing the vehicle
• Do not store items in battery compartment.
• Keep electronic components dry.
• Do not operate vehicle without this plate properly installed.
• See vehicle service manual before servicing.
RUN
TOW
CCI 103384801
CAUTION EXPOSURE TO WATER MAY DAMAGE ELECTRONIC COMPONENTS
• Do not direct water stream in the area of this plate.
• See vehicle service manual before servicing.
CCI 103384601
WARNING
SHORTING OF BATTERY TERMINALS CAN CAUSE PERSONAL INJURY OR DEATH.
• When removing component mounting plate, do not place plate directly on top of batteries.
103384701
3
4
5
2
1
POS
NEG
DANGER!
HIGH VOLTAGE...
RISK OF SHOCK.
DO NOT TOUCH UNINSULATED TERMINALS OR CONNECTORS.
NO SPARKS FLAMES SMOKING
SULFURIC ACID
CAN CAUSE BLINDNESS OR SEVERE BURNS
SHIELD EYES
EXPLOSIVE GASES
CAN CAUSE BLINDNESS OR INJURY
FLUSH EYES IMMEDIATELY WITH WATER.
GET MEDICAL HELP FAST
LEAD ACID BATTERIES
RECYCLE
SEE INSTALLATION, MAINTENANCE AND OPERATION INSTRUCTIONS
VENTILATE WELL WHEN IN AN ENCLOSED SPACE AND WHEN CHARGING.
KEEP OUT OF REACH OF CHILDREN
DO NOT TIP
CCI 102591901
WARNING
HEAVY LIFTING CAN CAUSE SEVERE PERSONAL INJURY
• The weight of each 12-volt battery is in excess of 80 lb (36.3 kg).
• Lift batteries only with the aid of an assistant.
CCI 103238501

000441-004

DECALS – ELECTRIC VEHICLE, STYLE B AND STYLE C

ITEM	PART NO.	DESCRIPTION	QTY
		1 2 3 4	
1	102591901	Warning Tag, Battery, SPWS (For SPWS Accessory)	4
2	103238501	Decal, Warning -battery Weight	1
3	103384601	Decal-water Exposure	1
4	103384701	Decal-warning, Short	1
5	103384801	Decal-warning, Run Tow	1

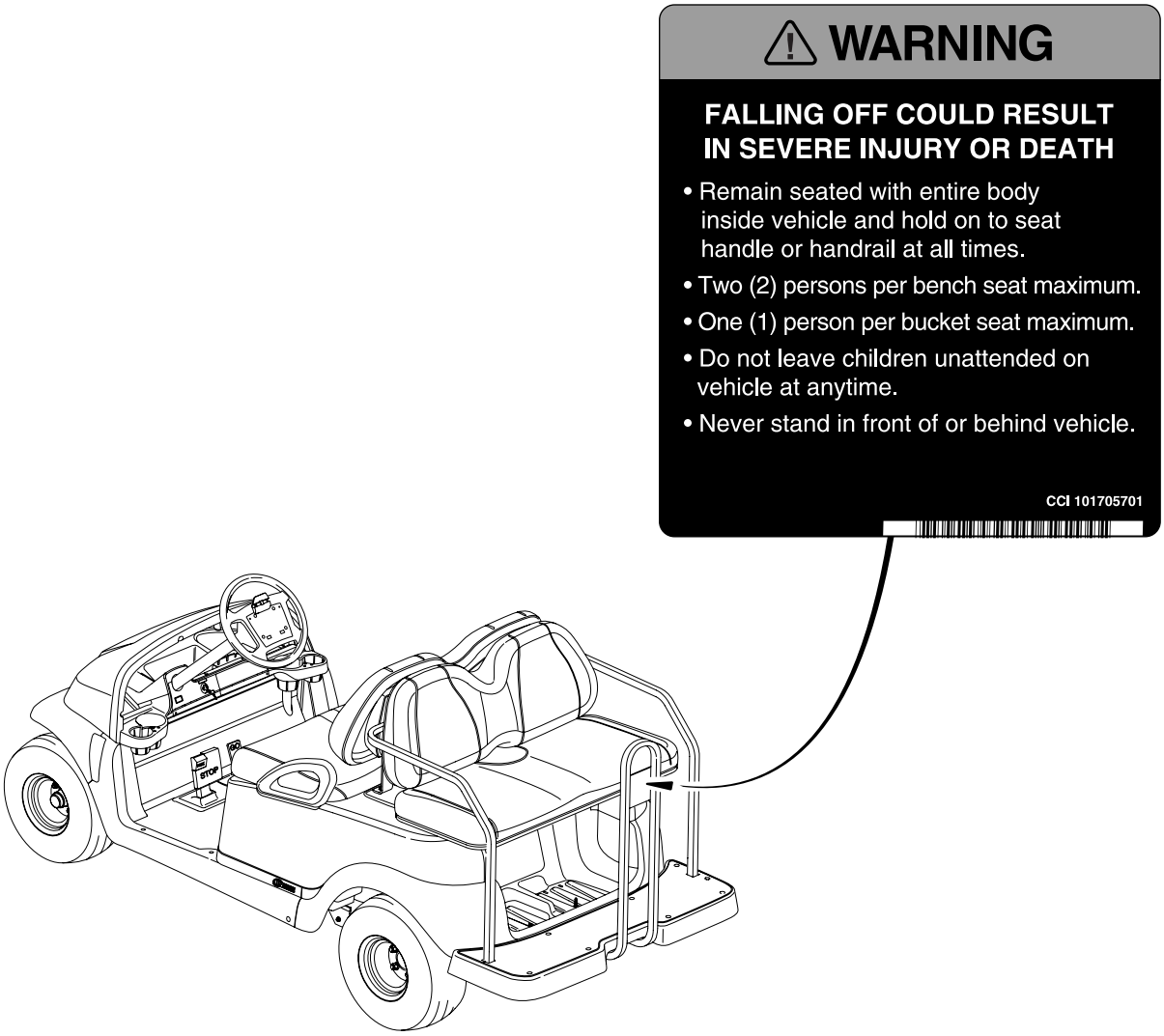
WARNING
FALLING OFF COULD RESULT IN SEVERE INJURY OR DEATH
• Remain seated with entire body inside vehicle and hold on to seat handle or handrail at all times.
• Two (2) persons per bench seat maximum.
• One (1) person per bucket seat maximum.
• Do not leave children unattended on vehicle at anytime.
• Never stand in front of or behind vehicle.
CCI 101705701
STOP

000495-001

DECAL – PRECEDENT VILLAGER 4 AND I2 4 PASSENGER

ITEM	PART NO.	DESCRIPTION	QTY
1	101705701	1 2 3 4 Decal, Warning	4

3

G

E

BRAKES AND PEDAL GROUP ASSEMBLIES

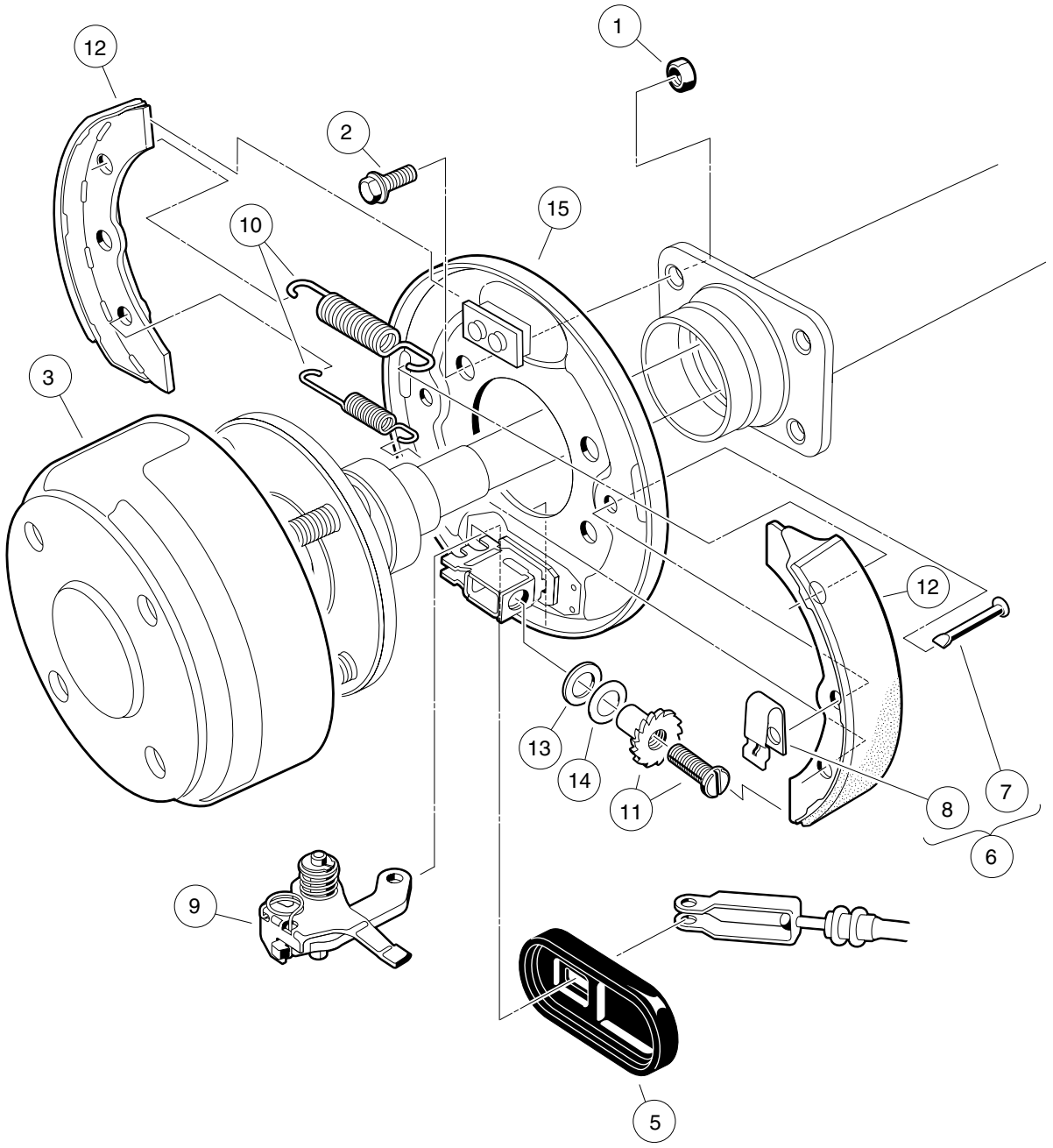

000186-001

REAR BRAKE ASSEMBLY, SELF-ADJUSTING

ITEM	PART NO.	DESCRIPTION	QTY
		1 2 3 4	
1	1013924	Nut, 5/16-24 Hex Head Cone	8
2	1014153	Bolt, Brake Cluster Mounting	8
3	101791101	Drum without Center Hole, Brake	2
4	101823301	Cluster Assembly, Right (Passenger) Brake (includes items 5 through 15)	1
5	1010850	Dust Cover	1
6	1011466	Kit, Shoe Retainer (includes items 7 and 8)	1
7	N/A	Pin	2
8	N/A	Shoe Clamp Spring	2
9	101815501	Lever Assembly, Self-Adjusting Brake, Right (Passenger)	1
10	101816301	Package, Brake Spring, Self-Adjusting	1
11	101816501	Adj Mechanism, S.A. Brakes, Right (Passenger)	1
12	101823201	Package, Brake Shoe, Self-Adjusting	1
13	101823801	Plate, Washer, Brake, Self-Adjusting	1
14	101823901	Washer, Brake, Self-Adjusting	1
15	101824001	Plate Assembly, Right Brake Backing	1
16	101823302	Cluster Assembly, Left Brake (includes items 17 through 27)	1
17	1010850	Dust Cover	1
18	1011466	Kit, Shoe Retainer (includes items 19 and 20)	1
19	N/A	Pin	2
20	N/A	Shoe Clamp Spring	2
21	101815502	Lever Assembly, Self-Adjusting Brake, Left	1
22	101816301	Package, Brake Spring, Self-Adjusting	1
23	101816502	Adjusting Mechanism, Self-Adjusting Brake, Left	1
24	101823201	Package, Brake Shoe, Self-Adjusting	1
25	101823801	Plate, Washer, Brake, Self-Adjusting	1
26	101823901	Washer, Brake, Self-Adjusting	1
27	101824002	Plate Assembly, Left Brake Backing	1

Note: Driver-side brake cluster not shown. Components have a similar appearance to passenger-side brake cluster components.

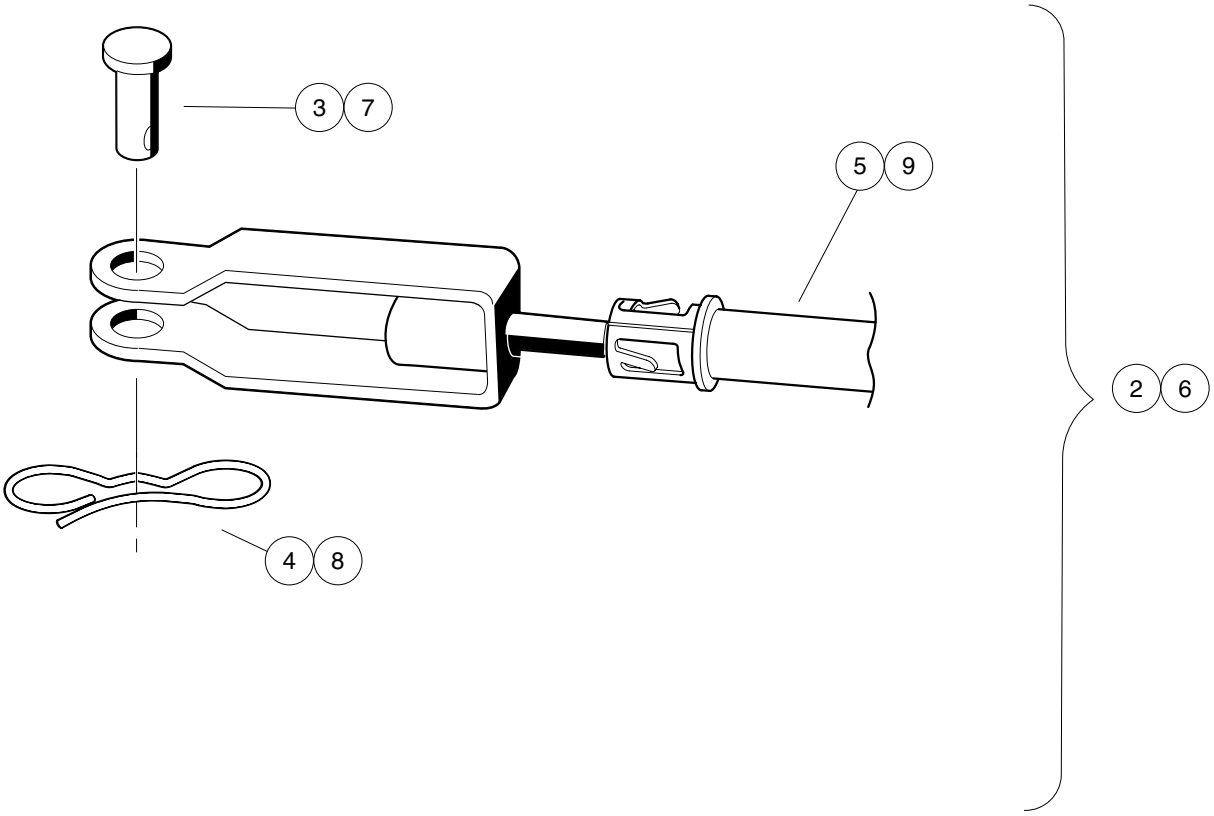

000467-001

BRAKE CABLES

ITEM	PART NO.	DESCRIPTION	QTY
		1 2 3 4	
1	103528801	Kit, Brake Cable, Prec Upgrade (includes items 2 through 11)	1
2	103528701	Kit, Brake Cable, Prec, Rh (includes items 3 through 5)	1
3	1010829	Pin, Clevis, 5/16 X 3/4	1
4	102292801	Pin, Bow Tie Locking - .072	1
5	103528501	Cable, Brake, Prec, Right	1
6	103528702	Kit, Brake Cable, Prec, Lh (includes items 7 through 9)	1
7	1010829	Pin, Clevis, 5/16 X 3/4	1
8	102292801	Pin, Bow Tie Locking - .072	1
9	103528601	Cable, Brake, Prec, Left	1
10	103535001	Bracket, Equalizer, Prec Awd	1
11	103629701	Instr, Prec Brake Cable Kit	1

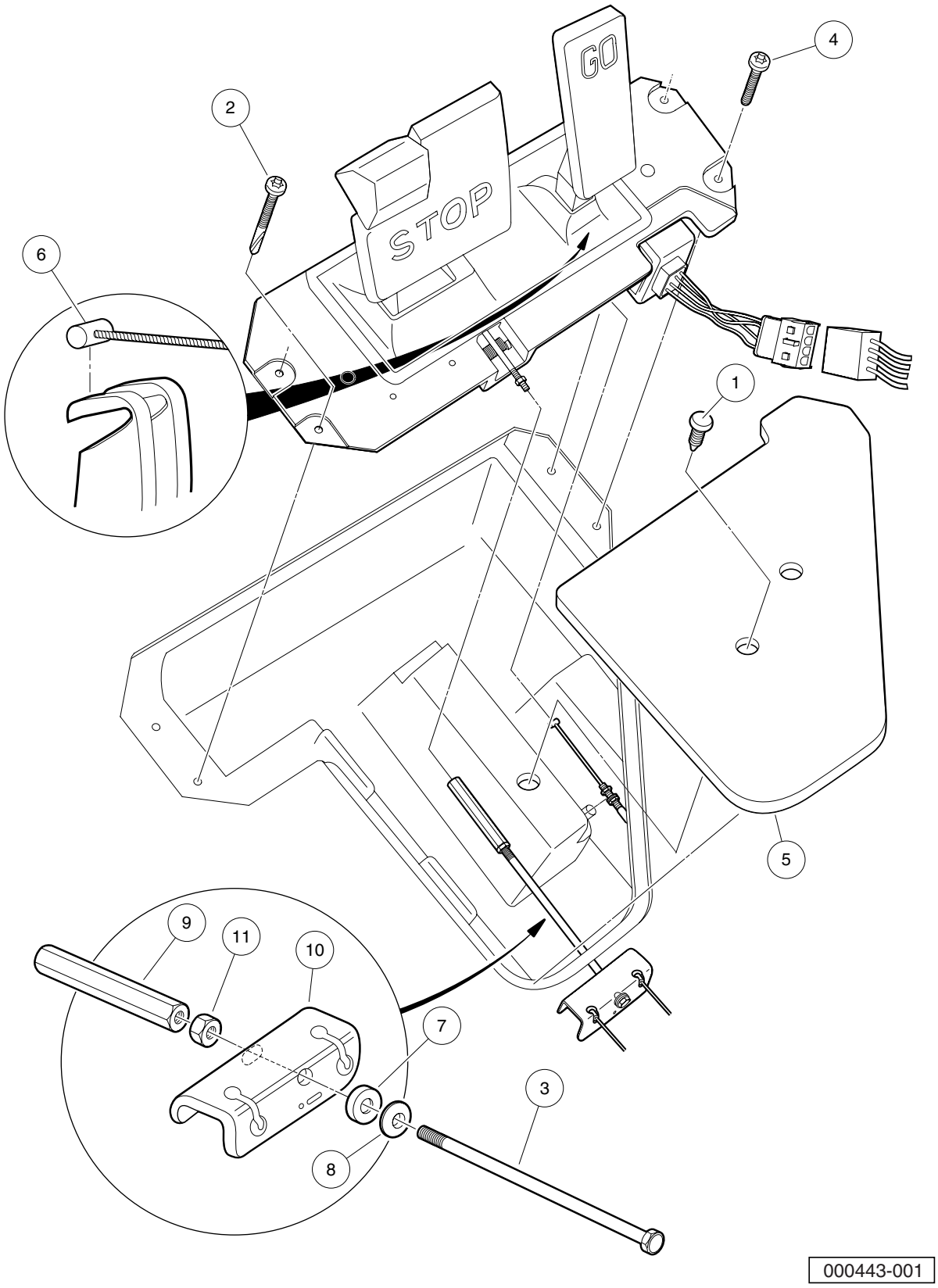
GO
STOP
1
2
3
4
5
6
7
8
9
10
11
000443-001

PEDAL GROUP CONNECTIONS – GASOLINE VEHICLE

ITEM	PART NO.	DESCRIPTION	QTY
		1 2 3 4	
1	1010434	Barrel - Plastic	1
2	102292201	Screw-1/4-20x1.25 Torx Pn Hdsd	2
3	102297901	Bolt, 5/16-18 X 7.375, Hex	1
4	102298030	Screw, K80x30, Torx Pn Hd Pt	2
5	102500801	Plate - Floor Cover	1
6	102513102	Cable, Acc, Snap-in	1
7	102551901	Washer, 5/16, Self Comp, Cup	1
8	102552001	Washer, 5/16, Self Comp, Cone	1
9	102594301	Nut, 5/16-18, Hex Adjusting -l	1
10	103535001	Bracket, Equalizer, Prec Awd	1
11	1242	Nut, 5/16-18 Hex	1

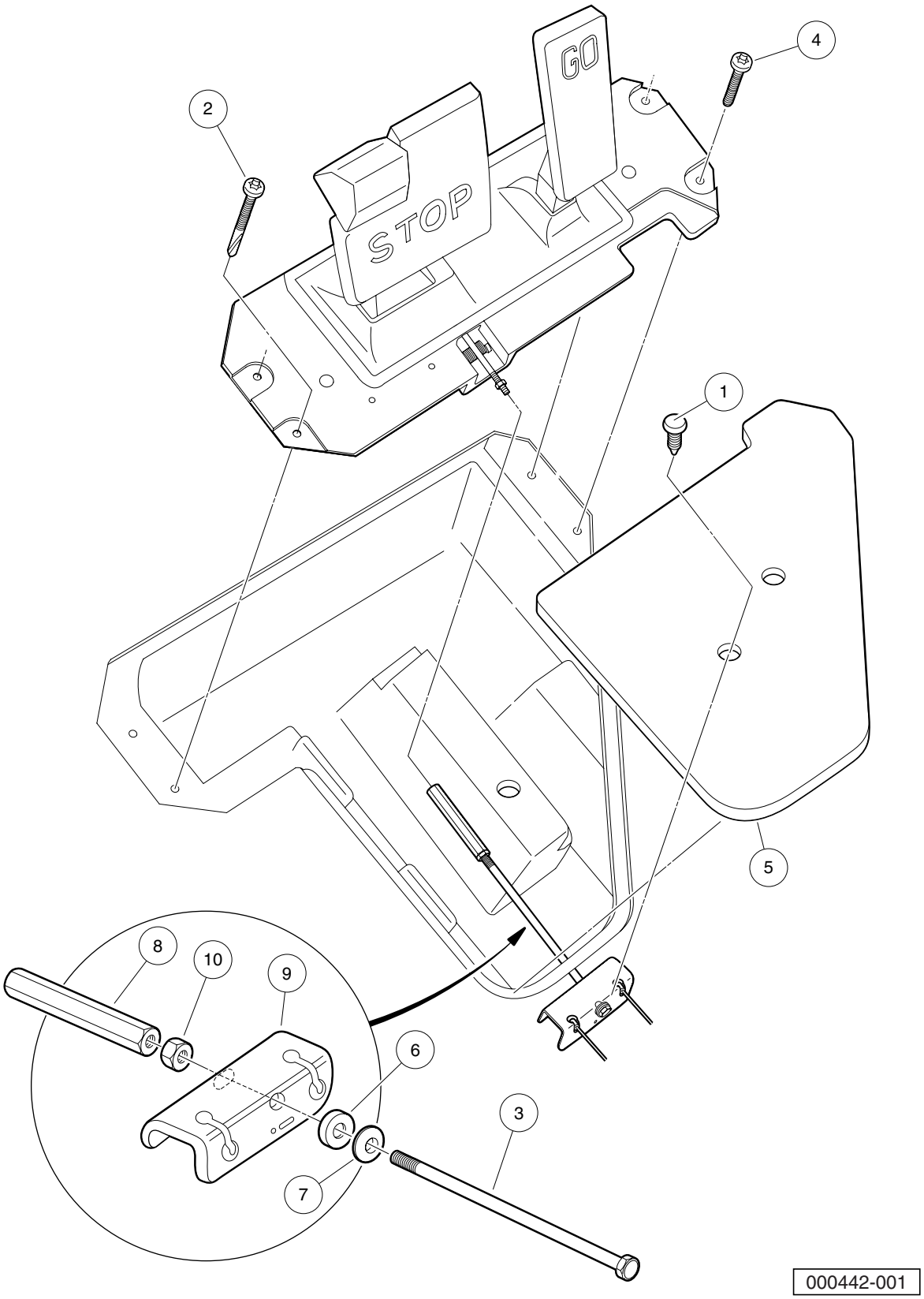
GO
STOP
1
2
3
4
5
6
7
8
9
10
000442-001

PEDAL GROUP CONNECTIONS – ELECTRIC VEHICLE

ITEM	PART NO.	DESCRIPTION	QTY
		1 2 3 4	
1	1010434	Barrel - Plastic	1
2	102292201	Screw-1/4-20x1.25 Torx Pn Hdsd	2
3	102297901	Bolt, 5/16-18 X 7.375, Hex	1
4	102298030	Screw, K80x30, Torx Pn Hd Pt	2
5	102500801	Plate - Floor Cover	1
6	102551901	Washer, 5/16, Self Comp, Cup	1
7	102552001	Washer, 5/16, Self Comp, Cone	1
8	102594301	Nut, 5/16-18, Hex Adjusting -l	1
9	103535001	Bracket, Equalizer, Prec Awd	1
10	1242	Nut, 5/16-18 Hex	1

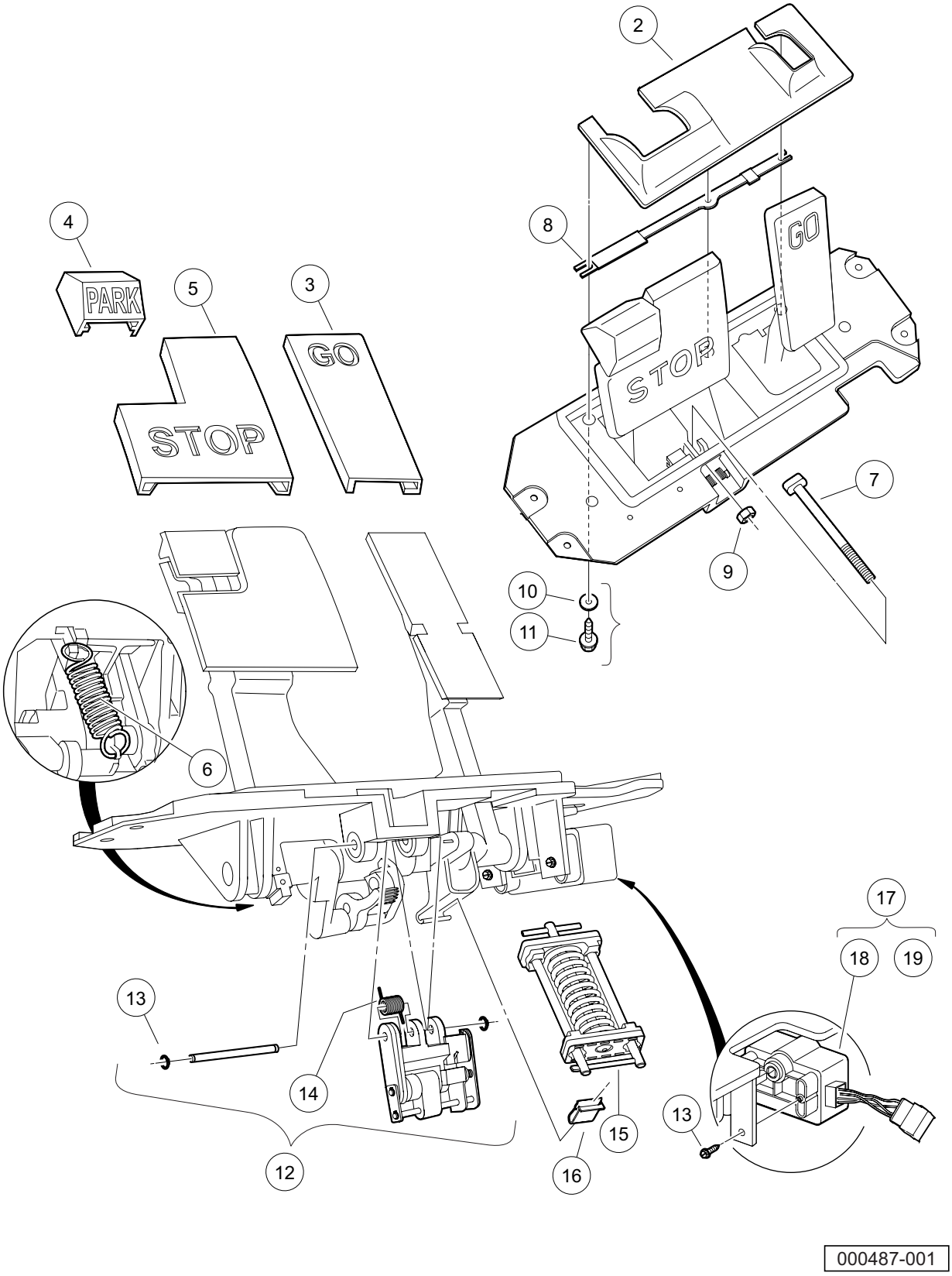
2
4
PARK
5
STOP
3
GO
8
GO
STOP
7
9
10
11
6
17
18
19
13
14
12
15
16
13
000487-001

PEDAL GROUP COMPONENTS – GASOLINE VEHICLE

ITEM	PART NO.	DESCRIPTION	QTY
		1 2 3 4	
1	N/A	Asm, Pedal Box Gas (includes items 2 through 17)	1
2	102558801	Shield, Debris	1
3	102558901	Pad, Pedal, Accelerator	1
4	102559001	Pad, Pedal, Park	1
5	102559101	Pad, Pedal, Brake	1
6	102559301	Spring, Brake, Return	1
7	102559401	Rod, Brake	1
8	102559601	Shield, Debris, Aux	1
9	102559701	Nut, Brake Rod	1
10	102563001	Washer, Std Fender, #10	3
11	102563101	Screw, Type A, #10	5
12	102587401	Assembly Pawl Lock Headed Pins (includes items 13 and 14)	1
13	102587501	Clip, Push, Pawl	2
14	103344301	Spring, Pawl Return	1
15	102588701	Kit, Pedal Spring	1
16	102588901	Clip, U	1
17	103327701	Kit, Gcor (includes items 18 and 19)	1
18	N/A	GCOR, Prec	1
19	103327801	Instr, Kit Gcor/mcor	1

Note: Replace pedal box assembly with Generation 2 pedal box assembly (CCI P/N 102595011). Generation 2 pedal box assembly will also require new accelerator pedal cable (CCI P/N 102595001).

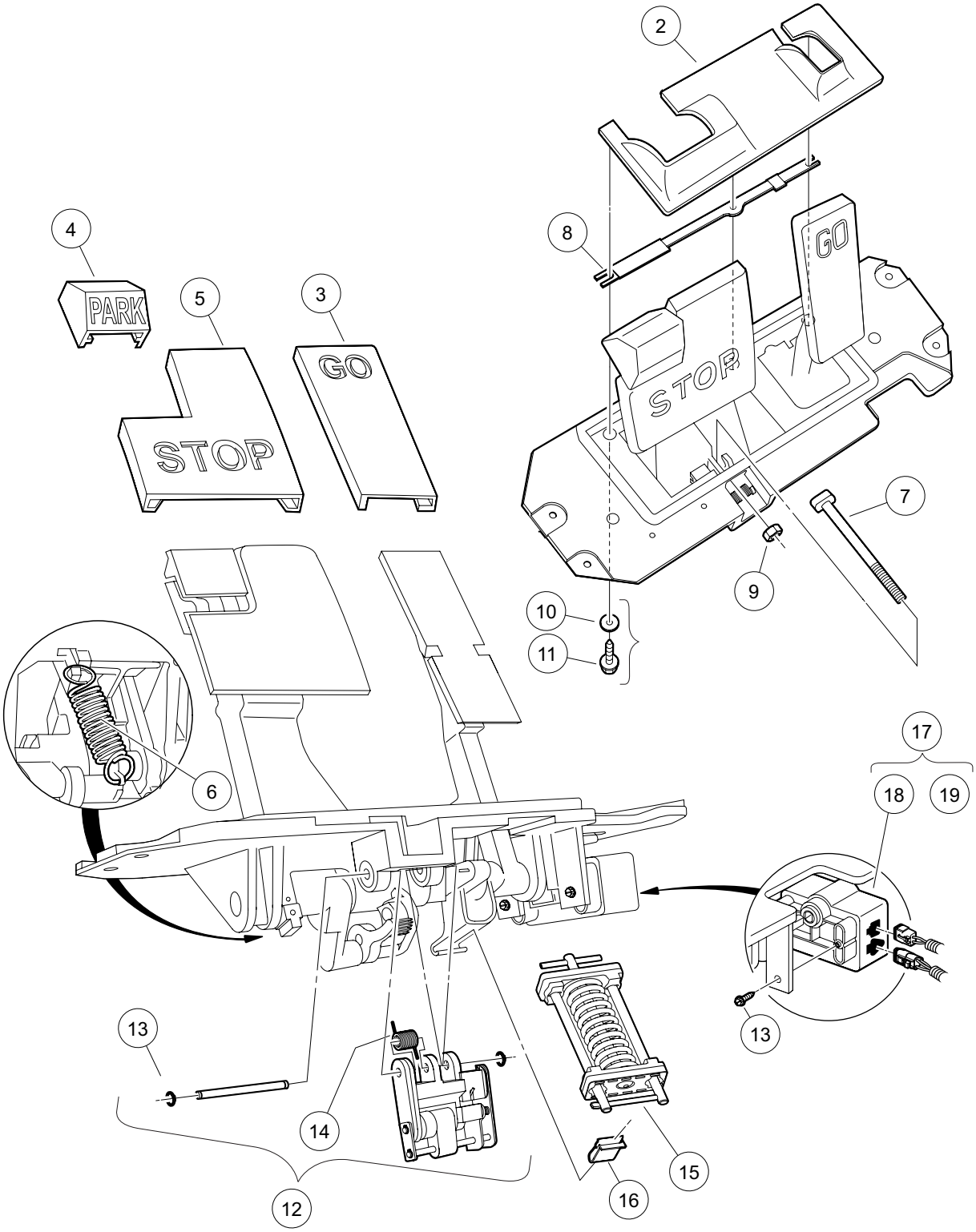

000488-001

PEDAL GROUP COMPONENTS – ELECTRIC VEHICLE

ITEM	PART NO.	DESCRIPTION	QTY
		1 2 3 4	
1	N/A	Asm, Pedal Box Elec (includes items 2 through 17)	1
2	102558801	Shield, Debris	1
3	102558901	Pad, Pedal, Accelerator	1
4	102559001	Pad, Pedal, Park	1
5	102559101	Pad, Pedal, Brake	1
6	102559301	Spring, Brake, Return	1
7	102559401	Rod, Brake	1
8	102559601	Shield, Debris, Aux	1
9	102559701	Nut, Brake Rod	1
10	102563001	Washer, Std Fender, #10	3
11	102563101	Screw, Type A, #10	5
12	102587401	Assembly Pawl Lock Headed Pins (includes items 13 and 14)	1
13	102587501	Clip, Push, Pawl	2
14	103344301	Spring, Pawl Return	1
15	102588701	Kit, Pedal Spring	1
16	102588901	Clip, U	1
17	103327901	Kit, Mcor (includes items 18 and 19)	1
18	N/A	Mcor, Prec	1
19	103327801	Instr, Kit Gcor/mcor	1

Note: Replace pedal box assembly with Generation 2 pedal box assembly (CCI P/N 102595012).

4

G

E

STEERING, FRONT AND REAR SUSPENSION

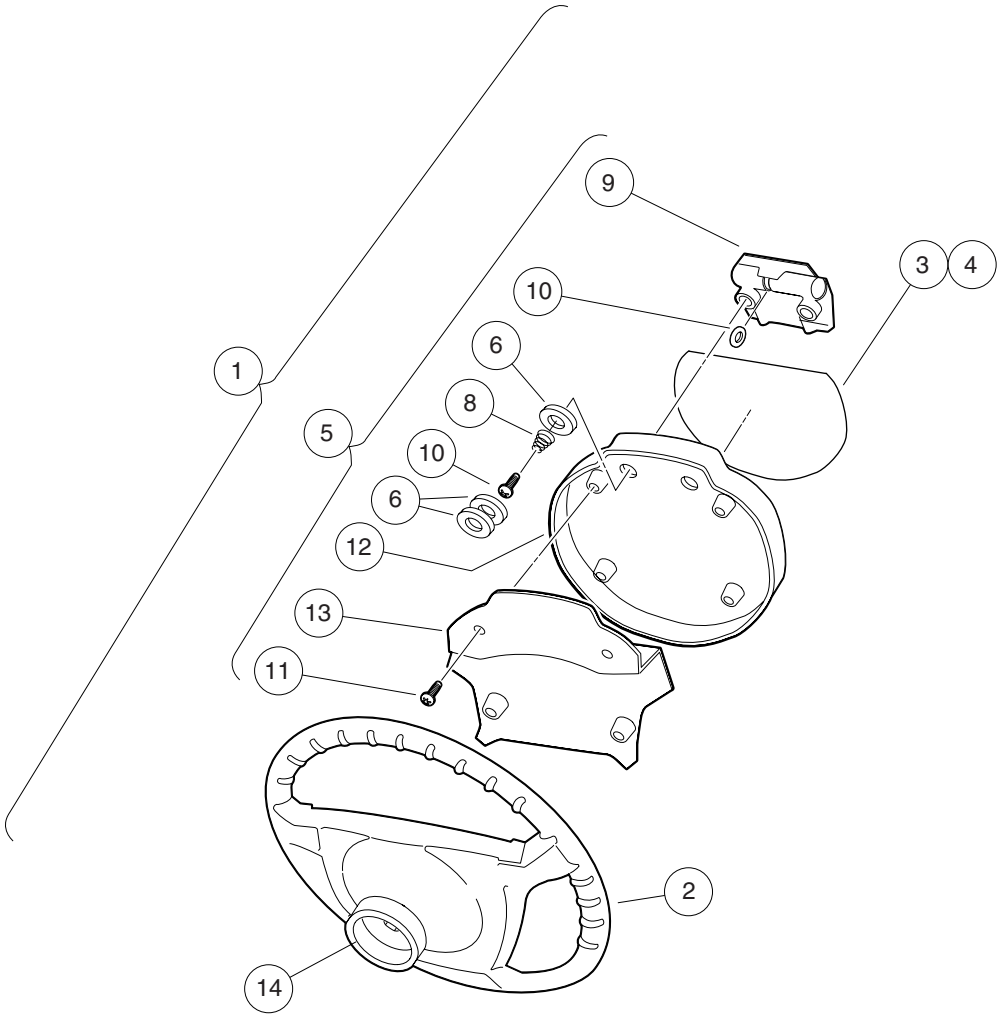

000470-001

STEERING WHEEL – CHAMPION AND I2L

ITEM	PART NO.	DESCRIPTION	QTY
		1 2 3 4	
1	AM1229401	Kit, Comfort Grip Conv, Hex (includes items 2 through 14)	1
2	N/A	Steering Wheel, Comfort Grip, Hex	1
3	102538101	Decal, Operating Instructions	1
4	102538201	Decal, Operating Instructions	1
5	102540801	Scorecard Plate Assembly (includes items 6 through 13)	1
6	1011697	Washer, 5/16 Flat	6
7	1012565	Screw, #12 Phillips Round Head	2
8	1012566	Tapered Compression Spring	2
9	1016154	Clip, Scorecard	1
10	1016214	Pencil Grip	1
11	102296020	Screw, Torx Pan Hd Pt, M6 X 20	4
12	N/A	Scorecard Plate, Comfort Grip	1
13	N/A	Scorecard Back Plate	1
14	102571301	Shroud, Steering Column	1

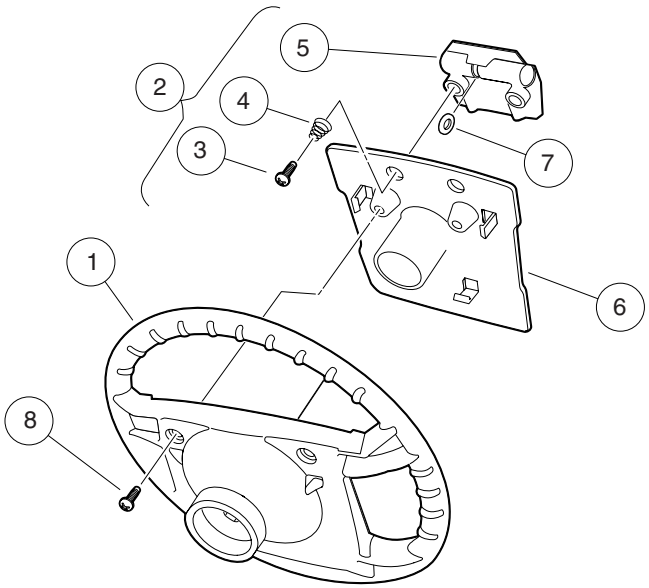

000471-001

STEERING WHEEL – PROFESSIONAL AND I2

ITEM	PART NO.	DESCRIPTION	QTY
		1 2 3 4	
1	101615602	Wheel Assy, Tri-Lobe Steering	1
2	1016219	Plate, Scorecard (includes items 3 through 7)	1
3	1012565	Screw, #12 Phillips Round Head	2
4	1012566	Tapered Compression Spring	2
5	1016154	Clip, Scorecard	1
6	N/A	Plate, Score Card	1
7	1016214	Pencil Grip	1
8	1016663	Screw, #12-14 X 0.625	2

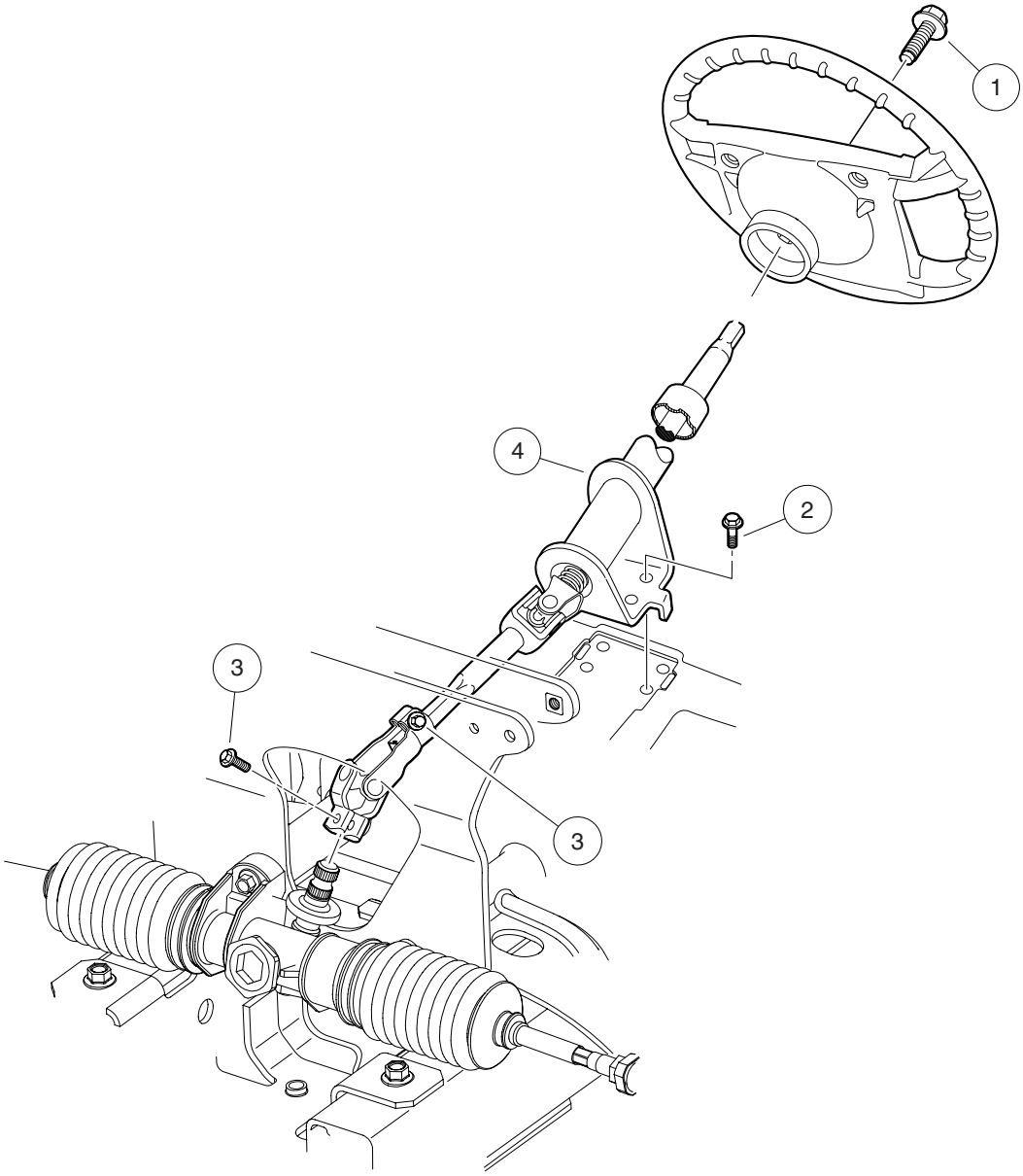

000469-002

ITEM	PART NO.	DESCRIPTION	QTY
		1 2 3 4	
1	102290120	Bolt, M10 X 20 Hex Washer Hd	1
2	102298116	Bolt - Flanged Hd, M8 X 16.0	4
3	102298130	Bolt, Flange Head, M8 X 30.0	2
4	103209501	Assy, Steering Column, Ld	1

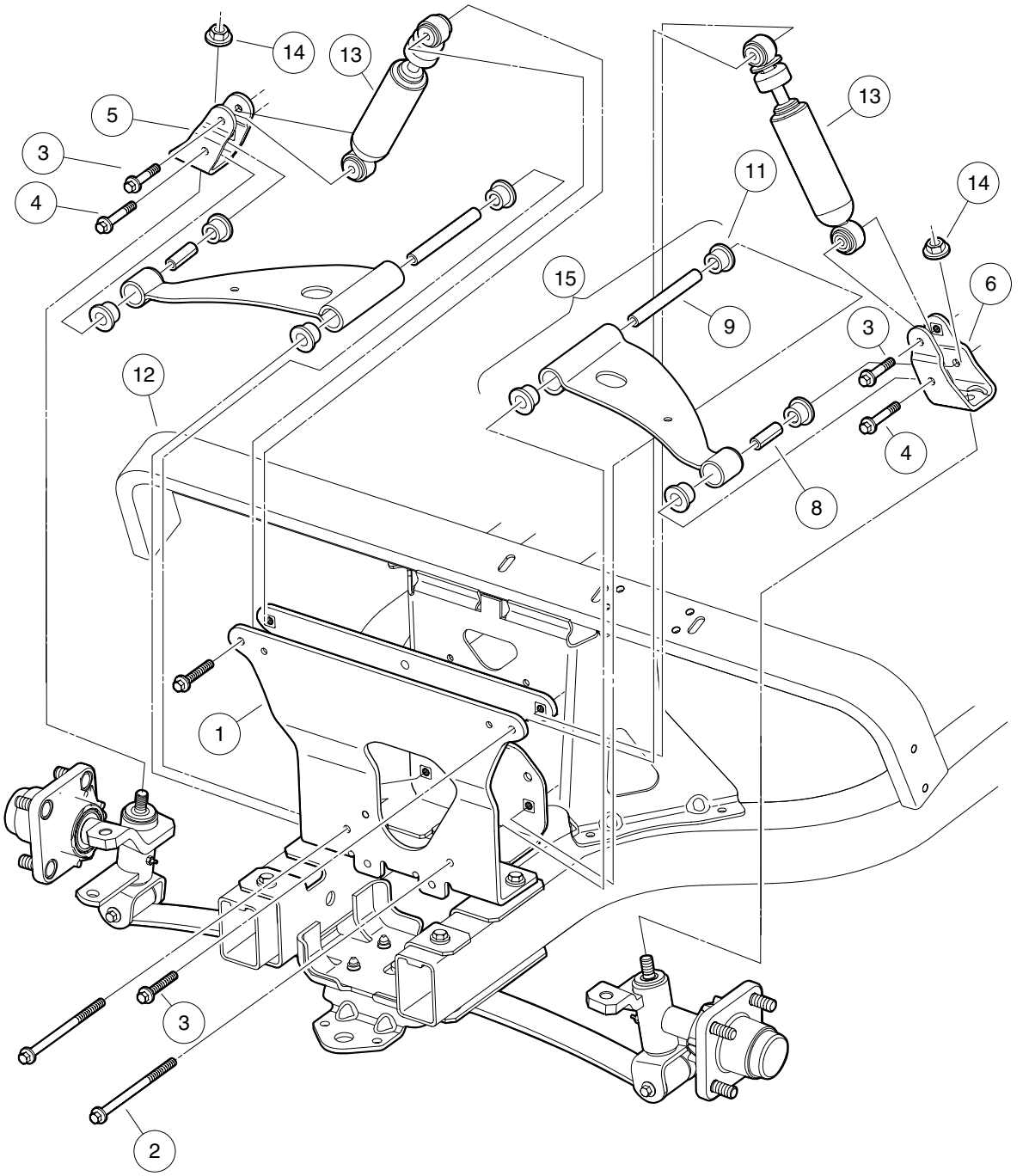

000445-001

FRONT SUSPENSION, UPPER

ITEM	PART NO.	DESCRIPTION	QTY
		1 2 3 4	
1	102287101	Assembly - Front Structure	1
2	102288901	Bolt-hex Fl, M8 X 1.25 X 135	2
3	102289401	Screw- Hex Cap, M8 X 1.25 X 45	4
4	102289501	Screw- Hex Cap, M8 X 1.25 X 70	2
5	102289601	Upper Clevis Assembly - Rh	1
6	102289701	Upper Clevis Assembly - Lh	1
7	102289901	Kit, Susp, Bushing Joints (includes items 8 through 11)	1
8	102287601	Sleeve - Rolled, Outer	2
9	102287701	Sleeve - Rolled, Inner	2
10	102288101	Sleeve - Rolled, Spring	2
11	102956201	Bushing, Urethane, Short, Prec	12
12	102505701	Assembly, Dash Support	1
13	102588601	Shock Absorber Front Prv Spd	2
14	102878201	Nut, Lock,m12,washer,conical	2
15	103388501	Asm, 3 Piece A-arm, Bushings	2

Note: Item 15 includes bushings and sleeves. Item 7 (not shown) includes bushings and sleeves for control arms, and front suspension leaf spring. See lower suspension page for illustration of item 10.

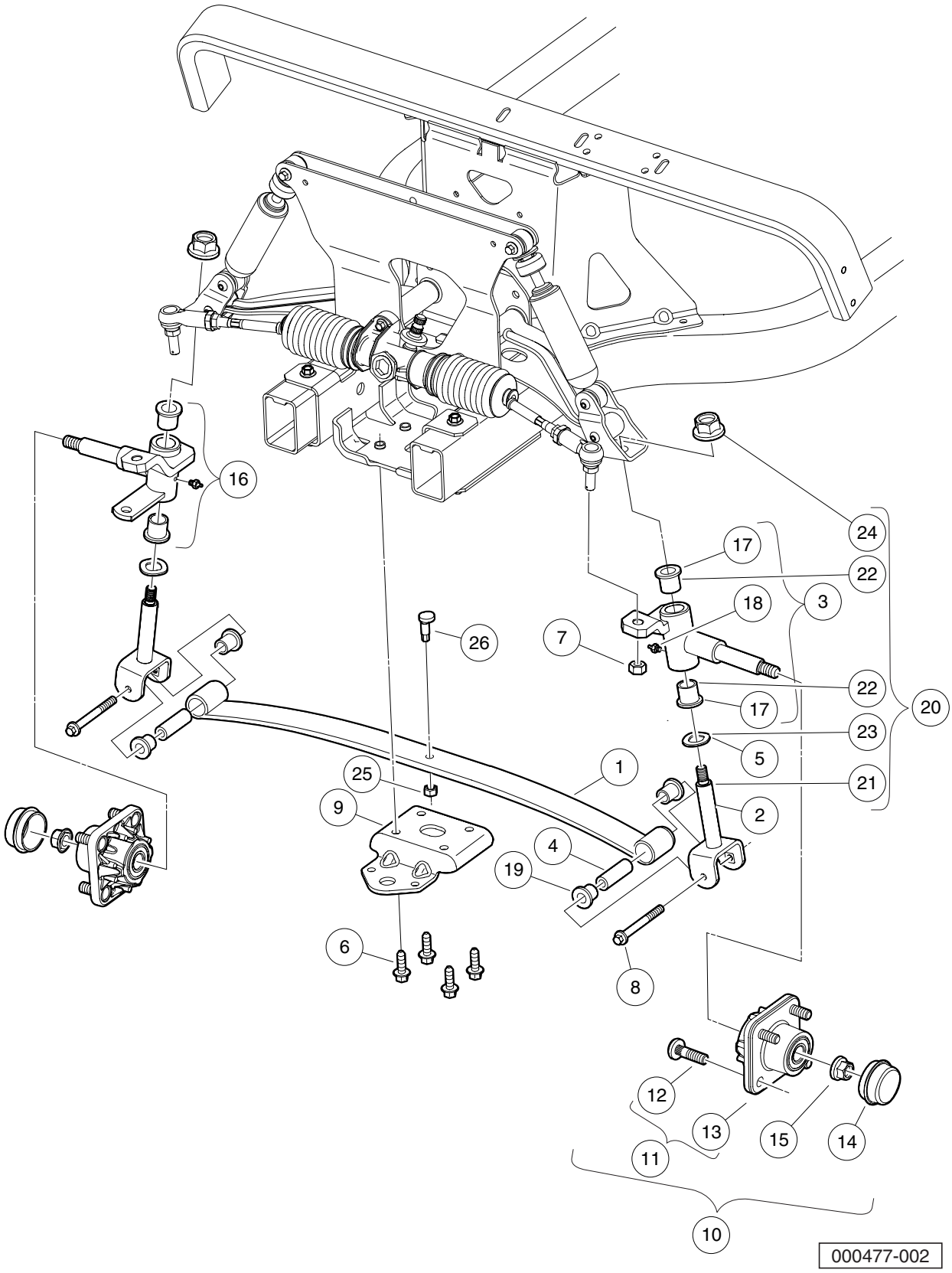
16
24
17
22
3
18
26
7
22
17
20
23
5
1
25
21
9
2
4
19
6
8
12
13
15
14
11
10
000477-002

FRONT SUSPENSION, LOWER (STYLE B)

ITEM	PART NO.	DESCRIPTION	QTY
		1 2 3 4	
1	1012030	Spring, Front Leaf	1
2	102287201	Assembly - King Pin	2
3	102287901	Knuckle Spindle Asm - Lh	1
4	102288101	Sleeve - Rolled, Spring	2
5	102288401	Wave Washer - Kingpin	2
6	102289101	Screw-m10x1.5, Trilob, Hex Fl	4
7	102289201	Nut - Hex Locking, M12 X 1.25	2
8	102289501	Screw- Hex Cap, M8 X 1.25 X 70	2
9	102289801	Clamp - Leaf Spring	1
10	102357701	Replacement Kit, Front Hub (includes items 11 through 15)	1
11	N/A	Front Hub Assembly, Ball Bearing (includes items 12 and 13)	1
12	102353401	Lug Stud, 1/2-20 UNF, 4037 Stl	4
13	N/A	Hub, Front	1
14	102353201	Cap, Front Hub	1
15	102353301	Hex Nut, Locking Flange, M14x2	1
16	102878101	Assy, Knuckle, Right Side (includes items 17 and 18)	1
17	N/A	Bushings, Knuckle Spindle Asym	2
18	N/A	Fitting, Grease, Knuckle Spindle Asym	1
19	102956201	Bushing, Urethane, Short, Prec	4
20	102973801	Kit, Susp, Kingpin Joints (includes items 21 through 24)	1
21	102287201	Assembly - King Pin	2
22	102288201	Bushing - Flanged	4
23	102288401	Wave Washer - Kingpin	2
24	102878201	Nut, Lock,m12,washer,conical	2
25	706	Nut, Hex 3/8-16	1
26	8745	Screw, Eccentric Adjustment	1

Note: Item 14 not used in all applications.

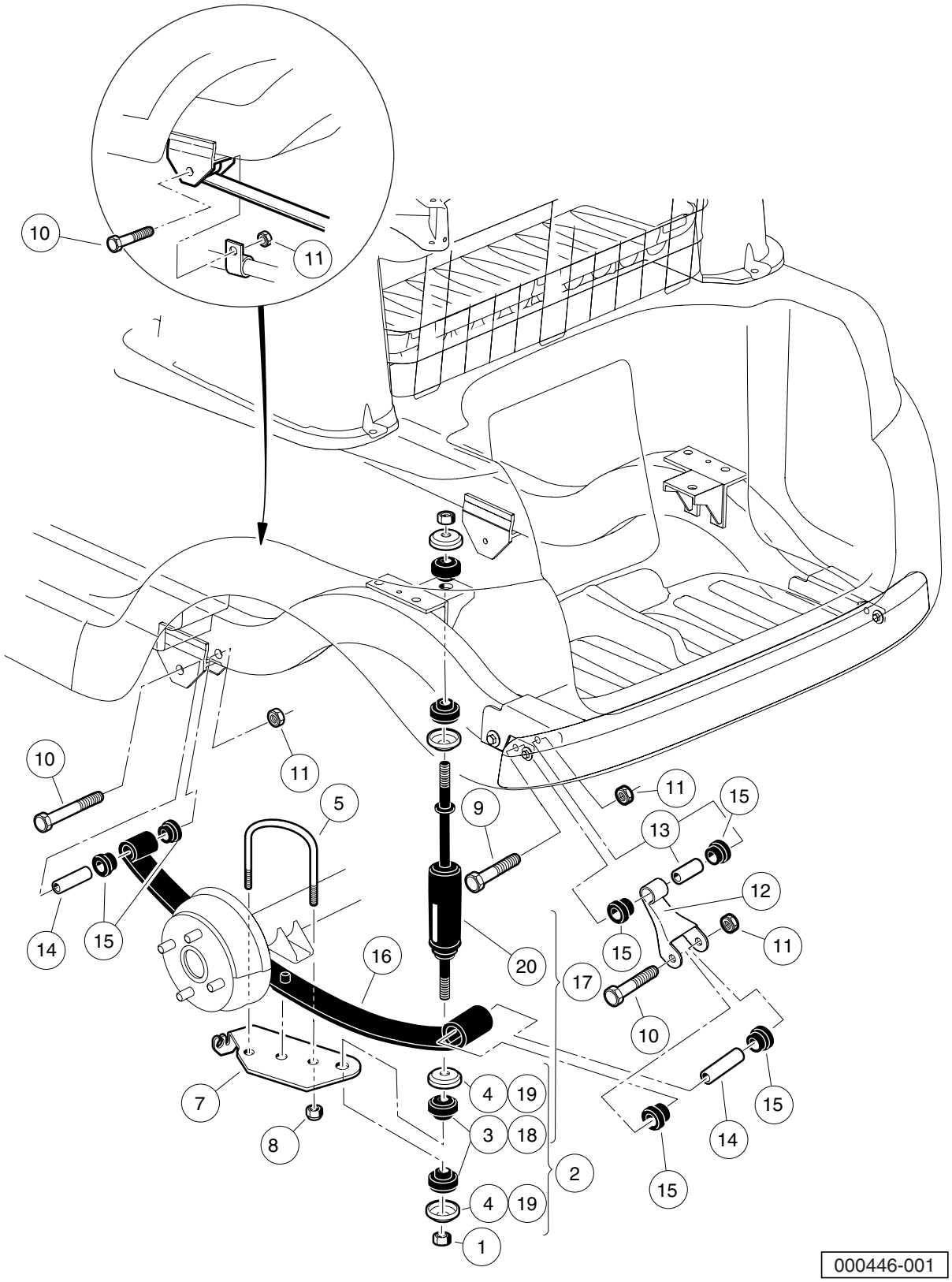
10
11
10
11
5
9
11
15
13
12
14
15
16
20
17
15
11
10
7
4
19
8
3
18
2
4
19
1
14
15
15
000446-001

REAR SUSPENSION – GASOLINE VEHICLE

ITEM	PART NO.	DESCRIPTION	QTY
		1 2 3 4	
1	1010145	Nut, 3/8-24 Hex	4
2	1011415	Kit, Shock Absorber Cushion (includes items 3 and 4)	2
3	N/A	Cushion, Shock Absorber	2
4	N/A	Retainer, Shock Absorber Cushion	2
5	1012180	U-Bolt	2
6	1012181	Bracket, Shock Mounting, Right (Passenger)	1
7	1012182	Bracket, Shock Mounting, Left (Driver)	1
8	1014555	Locknut, 7/16-14 Nylon Insert	4
9	102298170	Bolt - Flange Hd, M8 X 70.0	2
10	102298185	Bolt - Flange Hd, M8 X 85.0	4
11	102298401	Nut,m8,all Metal Lock	6
12	102506201	Shackle - Rear	2
13	102506301	Sleeve - Shackle Upper	2
14	102506401	Sleeve - Spring Eye Mounts	4
15	102506601	Bushing - Urethane	12
16	102513001	Rear Leaf Spring, Gas	2
17	N/A	Kit, Shock Absorber, Private Speed (includes items 18 through 20)	1
18	N/A	Cushion, Shock Absorber	8
19	N/A	Retainer, Shock Absorber Cushion	8
20	102588501	Shock Absorber Rear Prv Spd	2

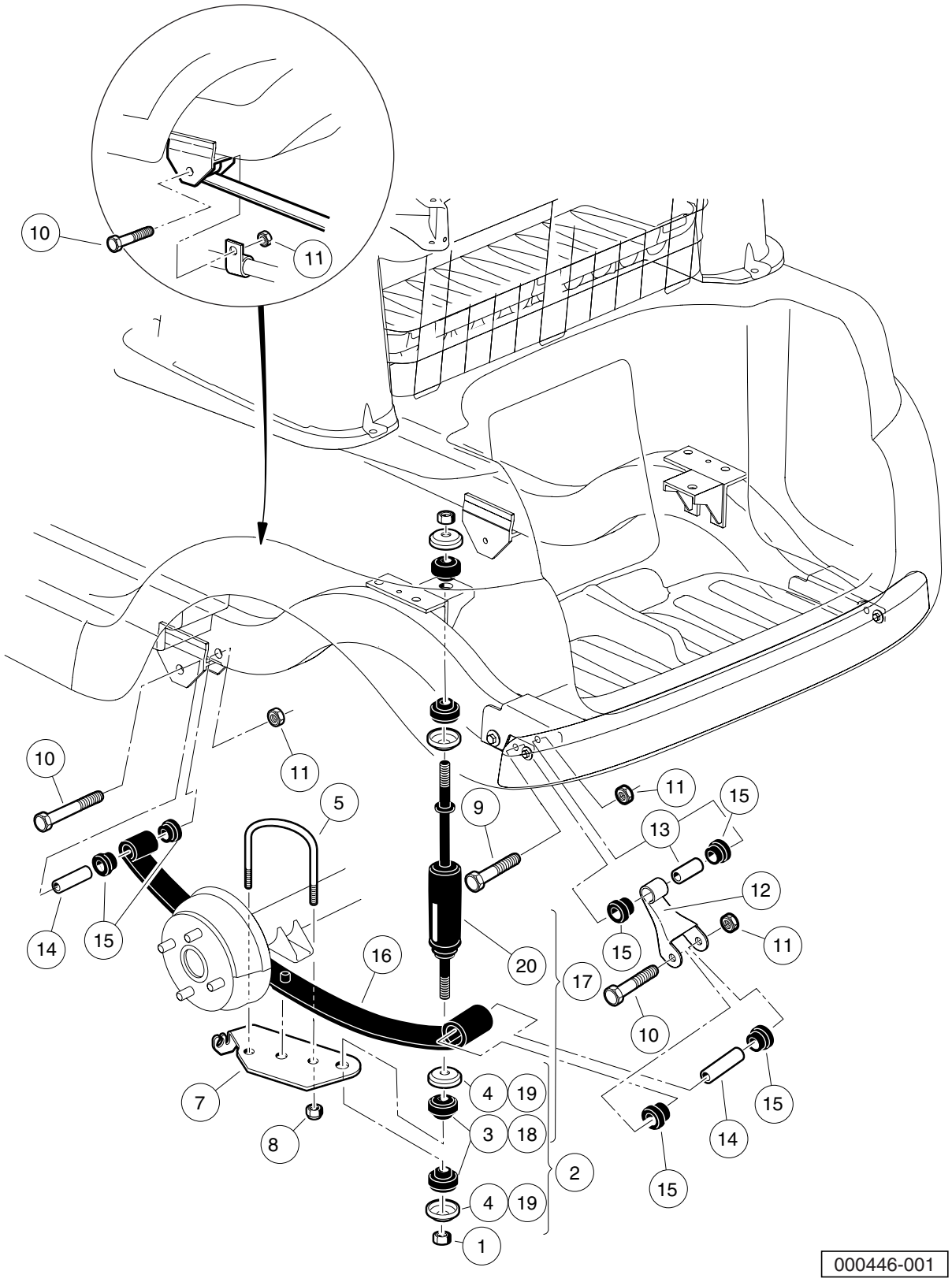
10
11
10
11
5
9
11
15
13
12
14
15
16
20
15
11
17
10
7
4
19
8
3
18
2
4
19
1
14
15
15
000446-001

REAR SUSPENSION – ELECTRIC VEHICLE

ITEM	PART NO.	DESCRIPTION	QTY
		1 2 3 4	
1	1010145	Nut, 3/8-24 Hex	4
2	1011415	Kit, Shock Absorber Cushion (includes items 3 and 4)	2
3	N/A	Cushion, Shock Absorber	2
4	N/A	Retainer, Shock Absorber Cushion	2
5	1012180	U-Bolt	2
6	1012181	Bracket, Shock Mounting, Right (Passenger)	1
7	1012182	Bracket, Shock Mounting, Left (Driver)	1
8	1014555	Locknut, 7/16-14 Nylon Insert	4
9	102298170	Bolt - Flange Hd, M8 X 70.0	2
10	102298185	Bolt - Flange Hd, M8 X 85.0	4
11	102298401	Nut,m8,all Metal Lock	6
12	102506201	Shackle - Rear	2
13	102506301	Sleeve - Shackle Upper	2
14	102506401	Sleeve - Spring Eye Mounts	4
15	102506601	Bushing - Urethane	12
16	102509301	Rear Leaf Spring, Elec	2
17	N/A	Kit, Shock Absorber, Private Speed (includes items 18 through 20)	1
18	N/A	Cushion, Shock Absorber	8
19	N/A	Retainer, Shock Absorber Cushion	8
20	102588501	Shock Absorber Rear Prv Spd	2

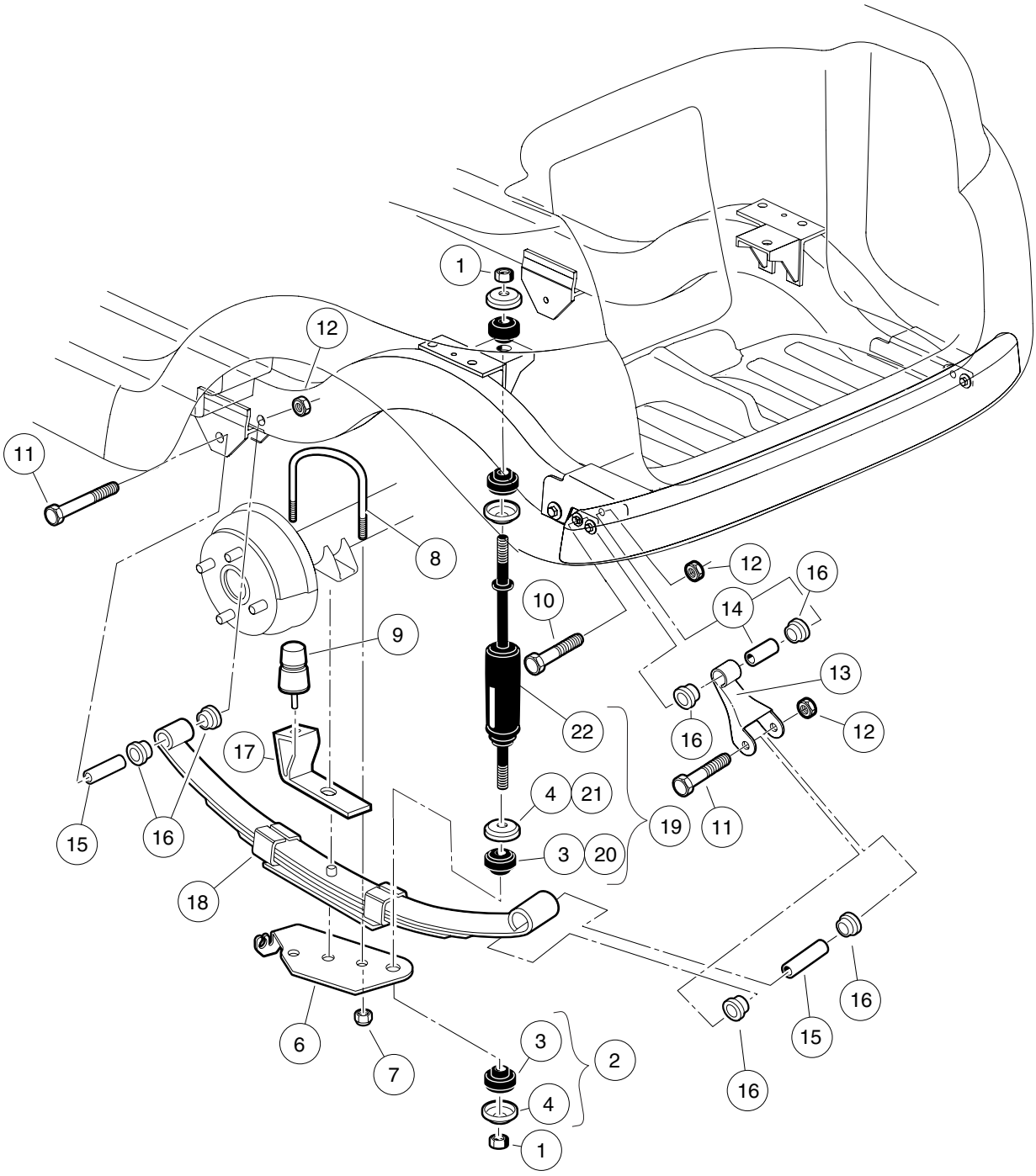
1
12
11
8
12
16
10
14
9
13
22
16
12
17
4
21
19
11
15
16
3
20
18
16
15
6
7
3
2
4
16
1

000492-001

REAR SUSPENSION – PRECEDENT VILLAGER 4 AND I2 4 PASSENGER

ITEM	PART NO.	DESCRIPTION	QTY
		1 2 3 4	
1	1010145	Nut, 3/8-24 Hex	4
2	1011415	Kit, Shock Absorber Cushion (includes items 3 and 4)	2
3	N/A	Cushion, Shock Absorber	2
4	N/A	Retainer, Shock Absorber Cushion	2
5	1012181	Bracket, Shock Mounting, Right (Passenger)	1
6	1012182	Bracket, Shock Mounting, Left (Driver)	1
7	1014555	Locknut, 7/16-14 Nylon Insert	4
8	1014902	U-Bolt	2
9	1017235	Bumper, Jounce	2
10	102298170	Bolt - Flange Hd, M8 X 70.0	2
11	102298185	Bolt - Flange Hd, M8 X 85.0	4
12	102298401	Nut,m8,all Metal Lock	6
13	102506201	Shackle - Rear	2
14	102506301	Sleeve - Shackle Upper	2
15	102506401	Sleeve - Spring Eye Mounts	4
16	102506601	Bushing - Urethane	12
17	102534801	Jounce Bumper Bracket	2
18	102544901	Spril, Leaf, Rear	2
19	N/A	Kit, Shock Absorber, Private Speed (includes items 20 through 22)	A/R
20	N/A	Cushion, Shock Absorber	8
21	N/A	Retainer, Shock Absorber Cushion	8
22	102588501	Shock Absorber Rear Prv Spd	2

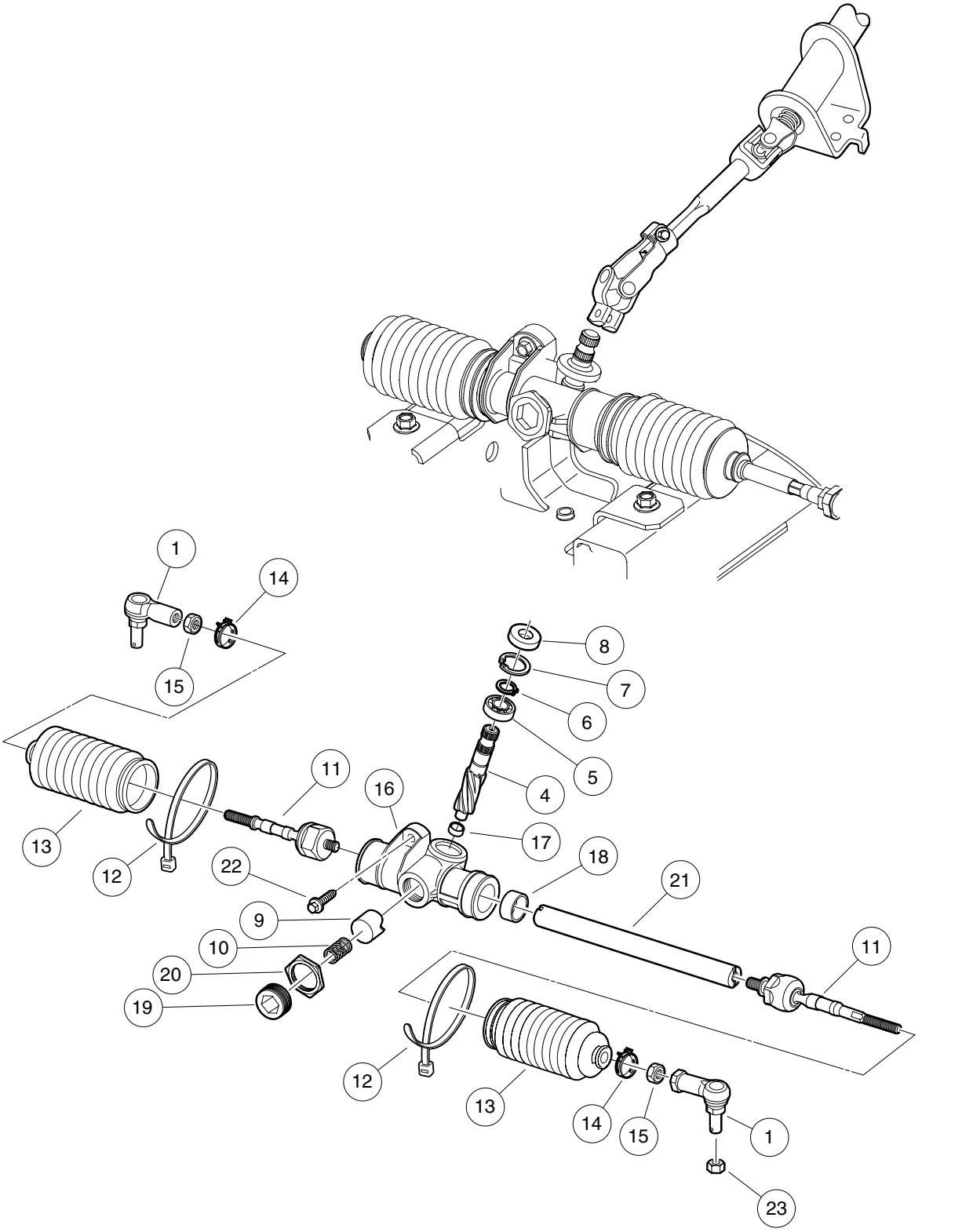
1
14
15
8
7
6
5
4
11
16
17
13
12
22
18
21
9
10
20
19
11
12
13
14
15
1
23
000476-002

STEERING GEAR ASSEMBLY (STYLE B)

ITEM	PART NO.	DESCRIPTION	QTY
		1 2 3 4	
1	102022601	End, Tie Rod M12 X 1.25	2
2	102288601	Steering Gear Box Assembly (includes items 3 through 21)	1
3	102564901	Asm, Pinion, Steer Gear, Prec (includes items 4 through 6)	1
4	N/A	Pinion, Steering	1
5	N/A	Bearing, Ball	1
6	N/A	Ring, Retaining	1
7	102565101	Ring, C-type, Stop, Prec	1
8	102565201	Seal, Dust, Steering, Pinion	1
9	102565301	Yoke, Support	1
10	102565401	Spring, Yoke, Prec	1
11	102565701	Assy, Ball Joint, Inner, Prec	2
12	102565801	Wrap, Tie, Steel, Prec	2
13	102565901	Bellows, Steering	2
14	102566001	Clip, Steering, Prec	2
15	102566101	Nut,m12-1.25,jam,steer,prec	2
16	N/A	Housing, Pinion (includes items 17 and 18)	1
17	N/A	Bearing, Needle	1
18	N/A	Bushing, Rack	1
19	N/A	Plug, Yoke	1
20	N/A	Nut, Lock, Rack Screw	1
21	N/A	Rack, Steering	1
22	102289001	Screw, M8X1.25X30, Hex	3
23	102289201	Nut - Hex Locking, M12 X 1.25	2

5

G

E

ELECTRICAL SYSTEM – GASOLINE VEHICLE

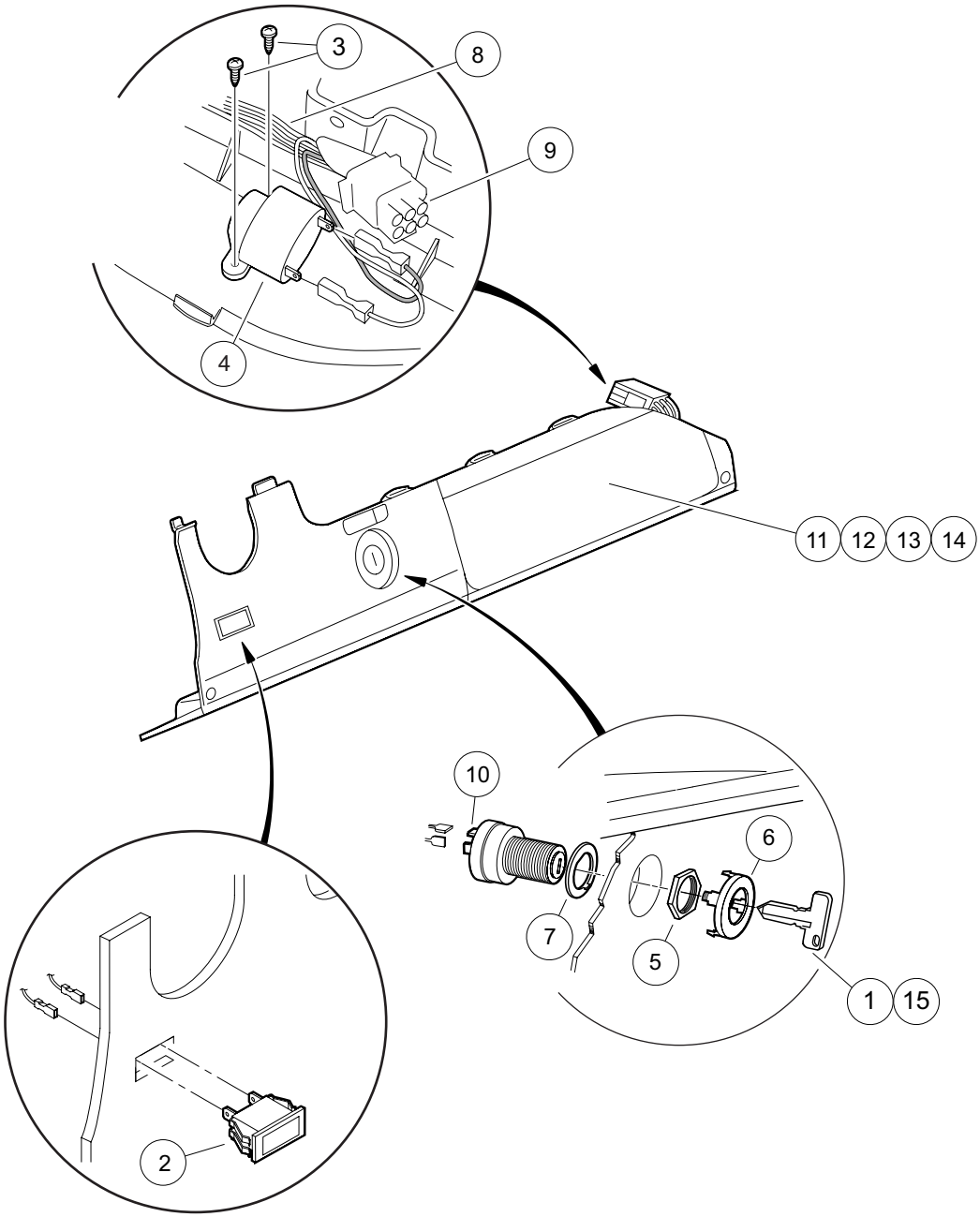

000490-002

ELECTRICAL COMPONENTS, FRONT BODY – GASOLINE VEHICLE

ITEM	PART NO.	DESCRIPTION	QTY
		1 2 3 4	
1	1012505	Keys (set of 2)	1
2	1016630	Light, Oil	1
3	1016849	Screw, #4-24 X 0.33 Pan-Head Machine	2
4	1016851	Buzzer, Reverse (9-48 VDC)	1
5	101830701	Nut, Key Switch	1
6	101834502	Cap, Black Key Switch	1
7	101851101	Washer, Key Switch	1
8	102515001	Ip Control Harness, Gas (includes item 9)	1
9	N/A	Connector, Plug 9-pin	1
10	102515101	Key Switch, Gas, Prec	1
11	102522901	Instrument Panel (standard)	1
12	102536601	Instrument Panel (with Hole for Headlight Switch)	1
13	102536602	Instrument Panel (with Hole for Fuel Gauge)	1
14	102536604	Instrument Panel (with Hole for Headlight Switch and Fuel Gauge)	1
15	AM10079	Bulk Std Keys (50) *	1

* Note: Must order in multiples of 50.

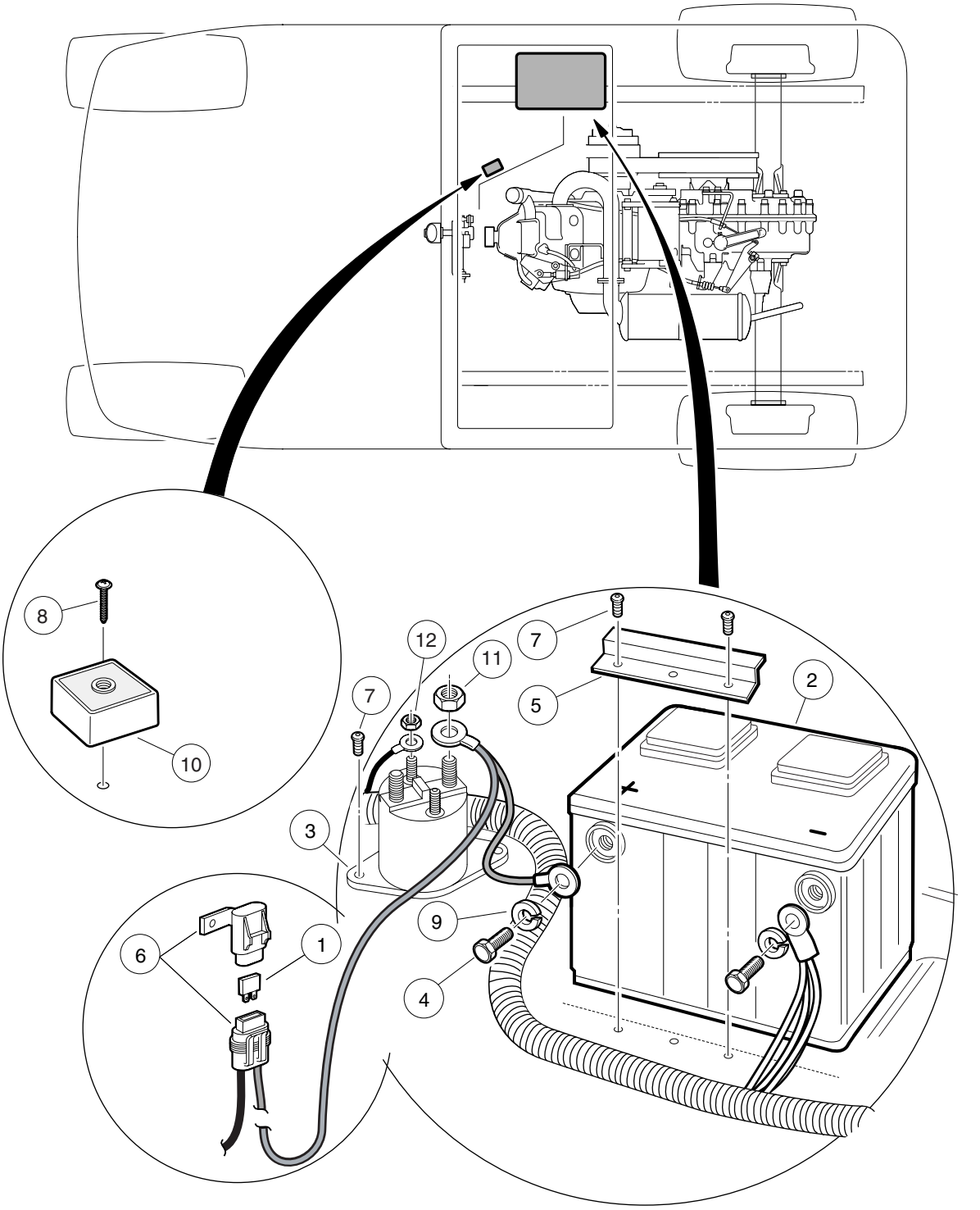
8
10
12
11
7
7
5
2
3
9
6
1
4
000479-001

BATTERY – GASOLINE VEHICLE

ITEM	PART NO.	DESCRIPTION	QTY
		1 2 3 4	
1	1012295	Fuse, 10-Amp	1
2	1012328	Battery, 12-Volt	1
3	1013609	Solenoid, 12-Volt	1
4	1014375	Screw, 3/8-16 X 0.50 Stainless Steel Hex-Head	2
5	101898001	Clamp, Battery	1
6	N/A	Cover, Fuse, Sealed, Metri	1
7	102296020	Screw, Torx Pan Hd Pt, M6 X 20	4
8	102296040	Screw, Torx Pan Hd Pt, M6 X 40	1
9	102355301	Lockwasher, 3/8 Stainless Stl	2
10	102803301	Asm, Voltage Regulator, Prec.	1
11	1242	Nut, 5/16-18 Hex	2
12	7893	Nut, #10-32 Hex	2

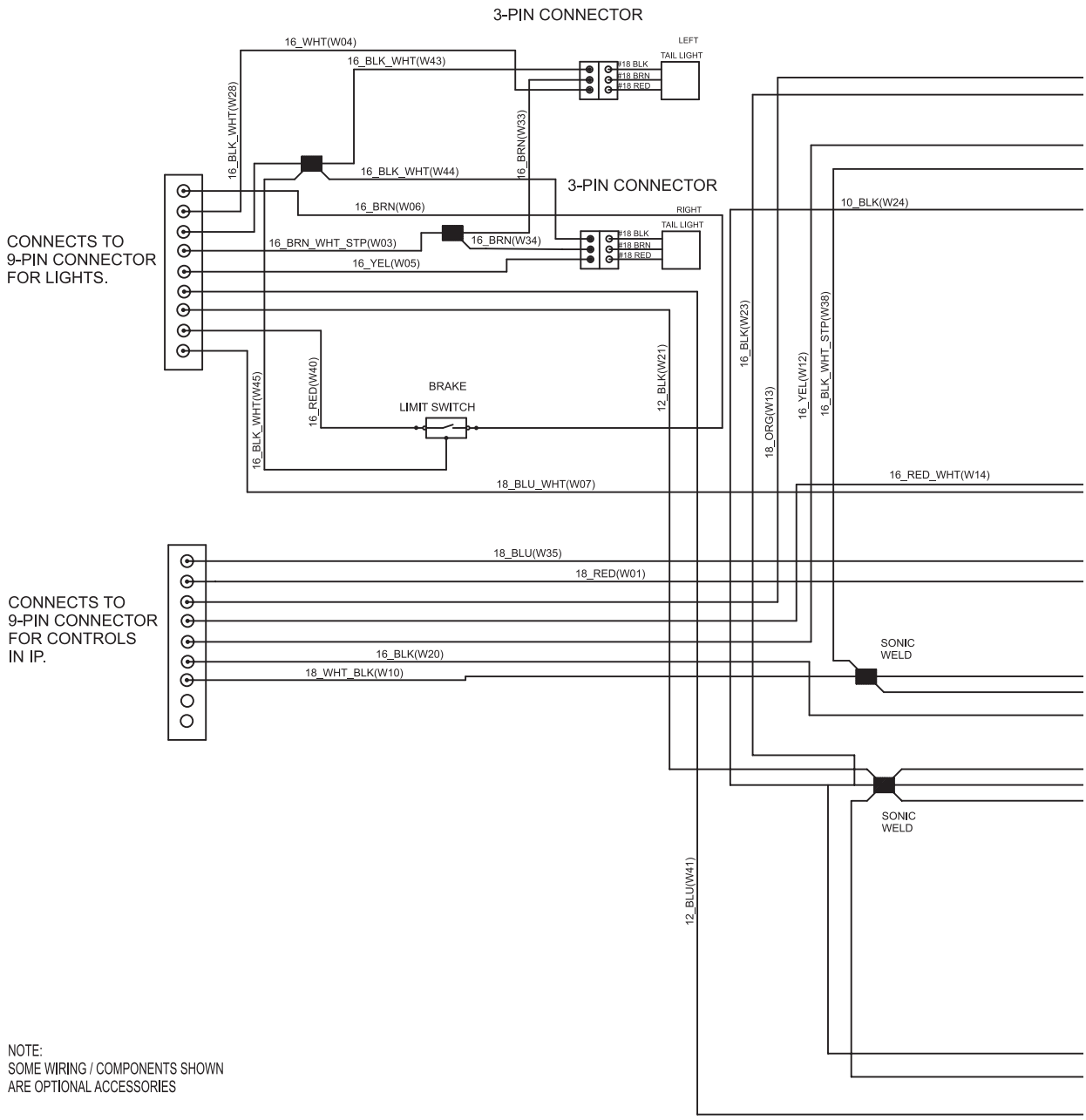
3-PIN CONNECTOR
16_WHT(W04)
16_BLK_WHT(W43)
LEFT
TAIL LIGHT
#18 BLK
#18 BRN
#18 RED
16_BLK_WHT(W28)
16_BRN(W33)
16_BLK_WHT(W44)
3-PIN CONNECTOR
16_BRN(W06)
RIGHT
TAIL LIGHT
10_BLK(W24)
CONNECTS TO
9-PIN CONNECTOR
FOR LIGHTS.
16_BRN_WHT_STP(W03)
16_BRN(W34)
16_YEL(W05)
16_BLK(W23)
16_YEL(W12)
16_BLK_WHT_STP(W38)
12_BLK(W21)
16_RED(W40)
BRAKE
LIMIT SWITCH
18_ORG(W13)
16_BLK_WHT(W45)
16_RED_WHT(W14)
18_BLU_WHT(W07)
18_BLU(W35)
18_RED(W01)
CONNECTS TO
9-PIN CONNECTOR
FOR CONTROLS
IN IP.
SONIC
WELD
16_BLK(W20)
18_WHT_BLK(W10)
SONIC
WELD
12_BLU(W41)
NOTE:
SOME WIRING / COMPONENTS SHOWN
ARE OPTIONAL ACCESSORIES

000481-001

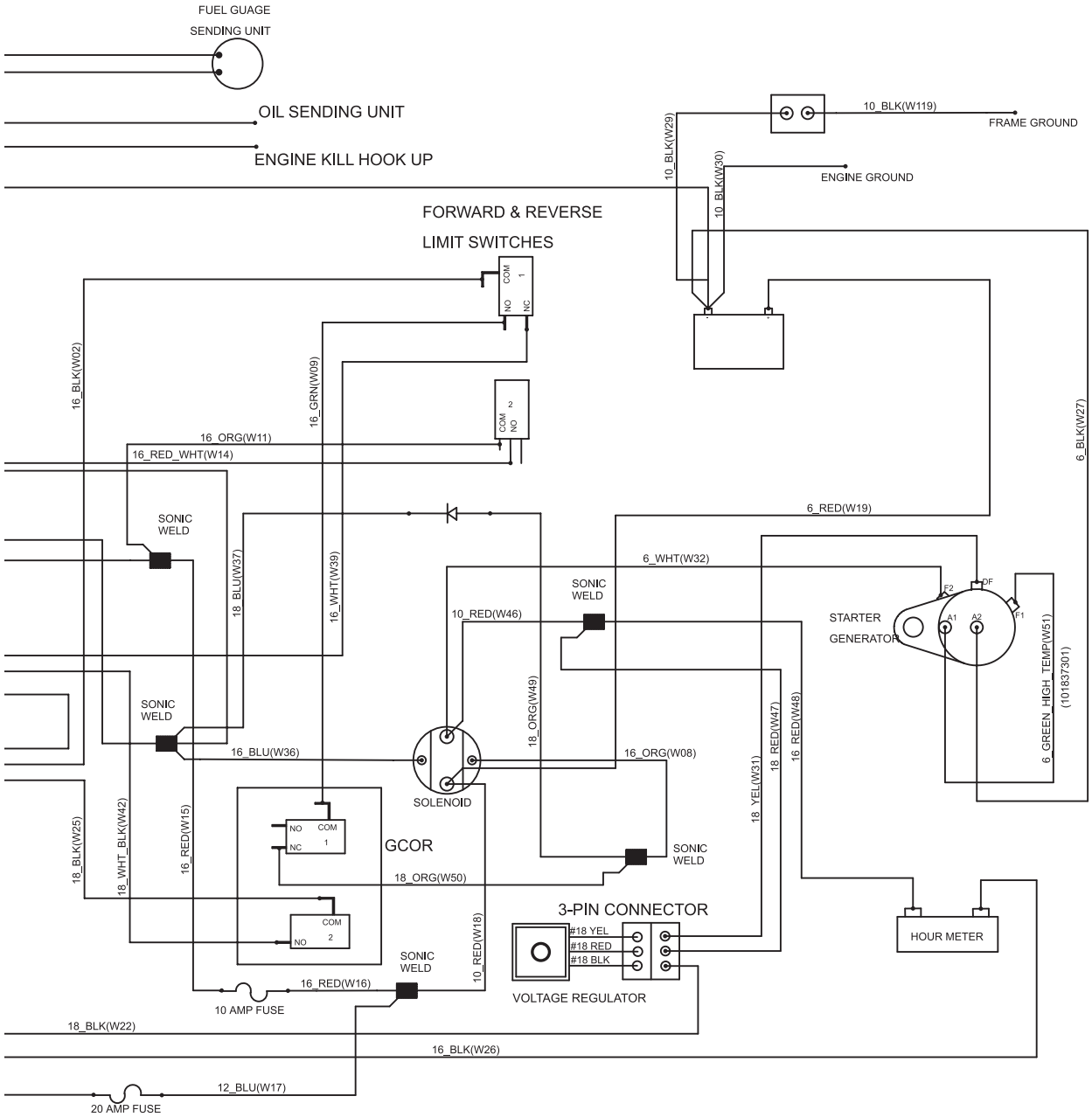
FUEL GUAGE
SENDING UNIT
OIL SENDING UNIT
ENGINE KILL HOOK UP
10_BLK(W119)
FRAME GROUND
10_BLK(W29)
10_BLK(W30)
ENGINE GROUND
FORWARD & REVERSE
LIMIT SWITCHES
COM 1
NO
NC
COM 2
NO
16_BLK(W02)
16_GRN(W09)
16_ORG(W11)
16_RED_WHT(W14)
6_BLK(W27)
6_RED(W19)
6_WHT(W32)
SONIC WELD
18_BLU(W37)
16_WHT(W39)
10_RED(W46)
STARTER
GENERATOR
F2
DF
A1
A2
F1
6_GREEN_HIGH_TEMP(W51)
(101837301)
18_ORG(W49)
16_BLU(W36)
16_ORG(W08)
SOLENOID
18_YEL(W31)
18_RED(W47)
16_RED(W48)
18_BLK(W25)
18_WHT_BLK(W42)
16_RED(W15)
GCOR
18_ORG(W50)
3-PIN CONNECTOR
#18 YEL
#18 RED
#18 BLK
HOUR METER
10_RED(W18)
16_RED(W16)
10 AMP FUSE
VOLTAGE REGULATOR
18_BLK(W22)
16_BLK(W26)
12_BLU(W17)
20 AMP FUSE

000481-001

See previous two pages for illustration.

ITEM	PART NO.	DESCRIPTION	QTY
1	102586201	1 2 3 4 Main Harness, Gas	1

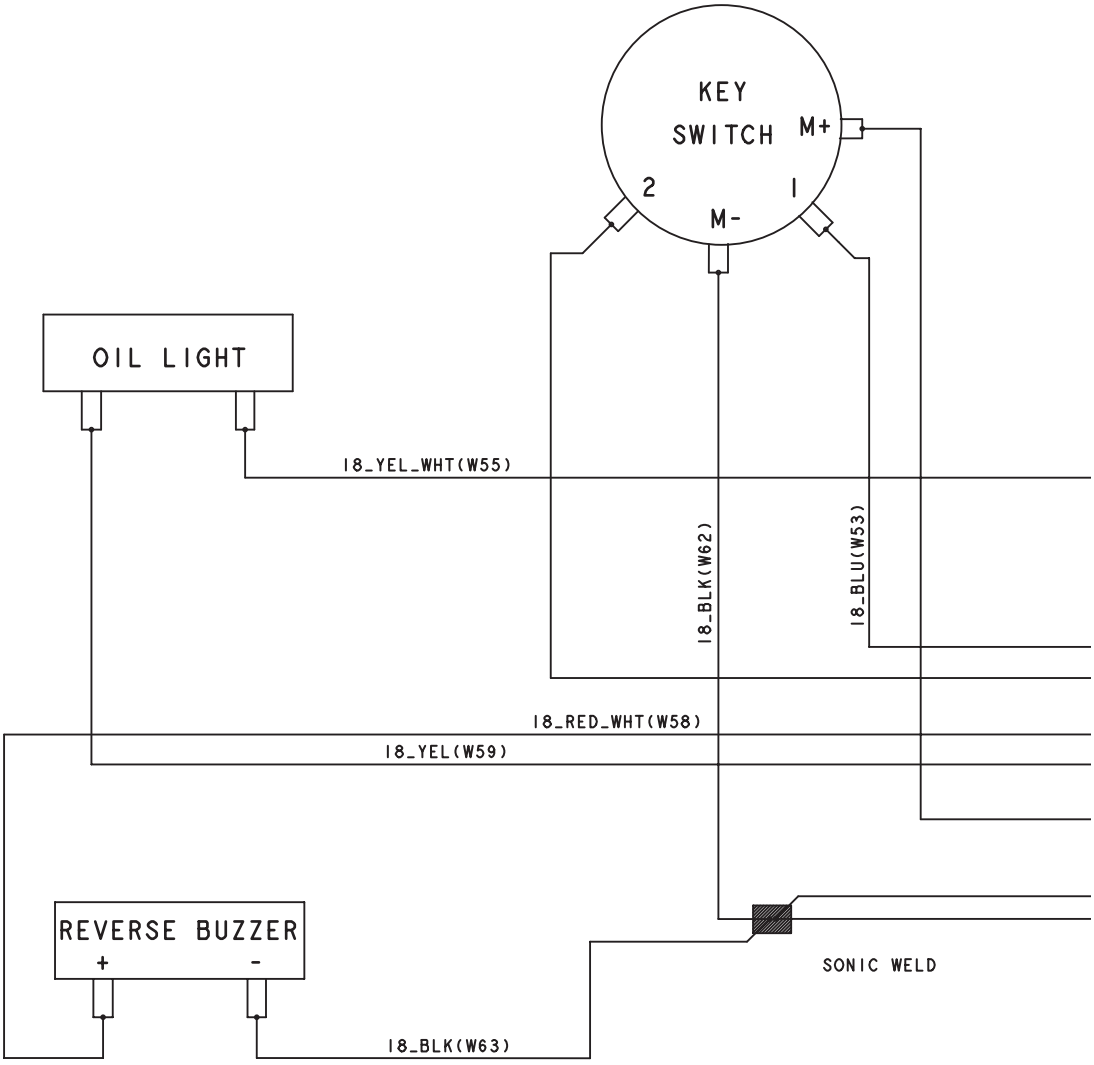
KEY
SWITCH
M+
2
1
M-
OIL LIGHT
18_YEL_WHT(W55)
18_BLK(W62)
18_BLU(W53)
18_RED_WHT(W58)
18_YEL(W59)
REVERSE BUZZER
+
-
SONIC WELD
18_BLK(W63)

000489-001

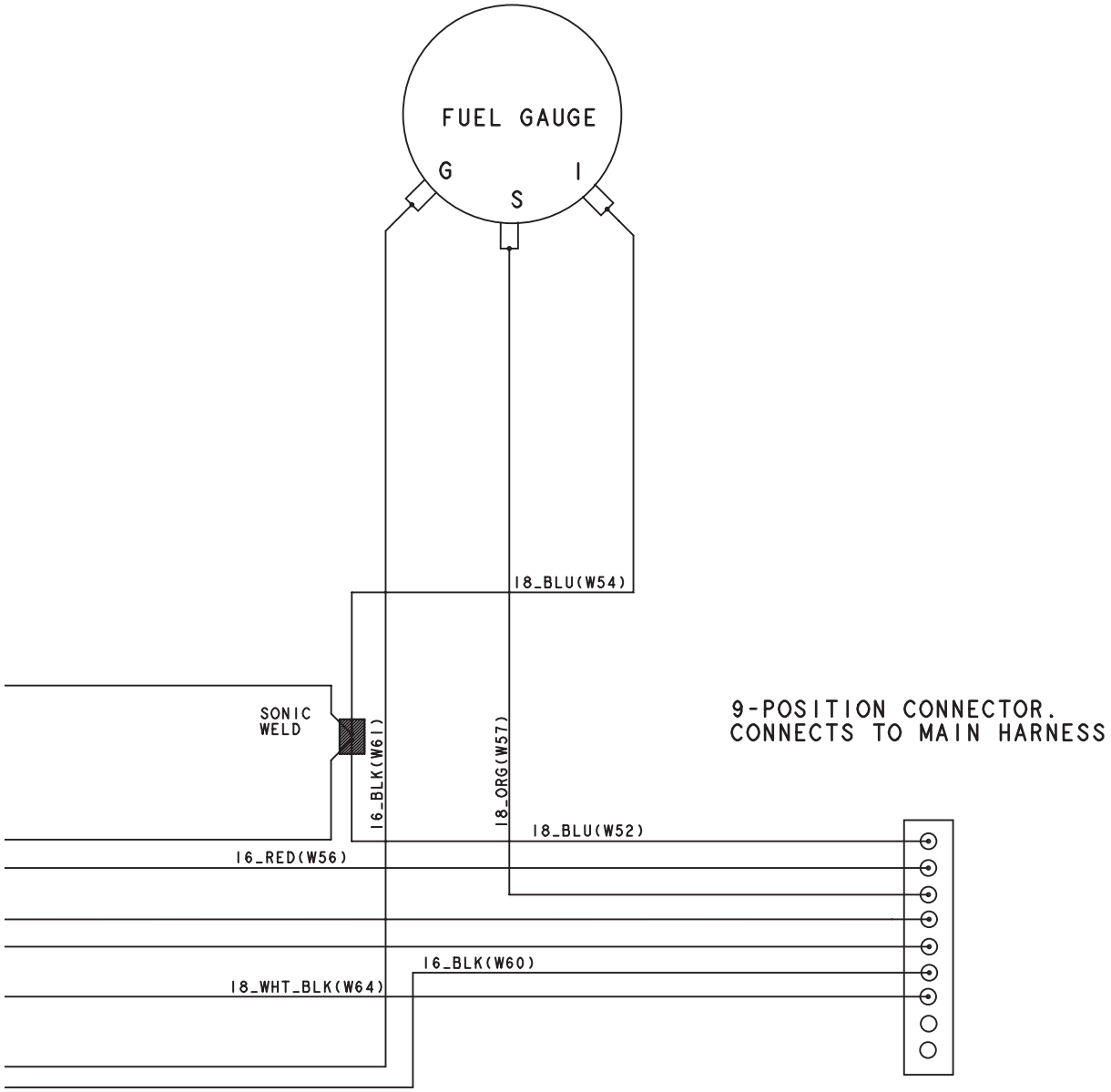
FUEL GAUGE
G
S
I
18_BLU(W54)
SONIC
WELD
16_BLK(W61)
18_ORG(W57)
9-POSITION CONNECTOR.
CONNECTS TO MAIN HARNESS
18_BLU(W52)
16_RED(W56)
16_BLK(W60)
18_WHT_BLK(W64)

000489-001

See previous two pages for illustration.

INSTRUMENT PANEL WIRE HARNESS

ITEM	PART NO.	DESCRIPTION	QTY
		1 2 3 4	
1	102515001	Ip Control Harness, Gas (includes item 2)	1
2	N/A	Connector, Plug 9-pin	1

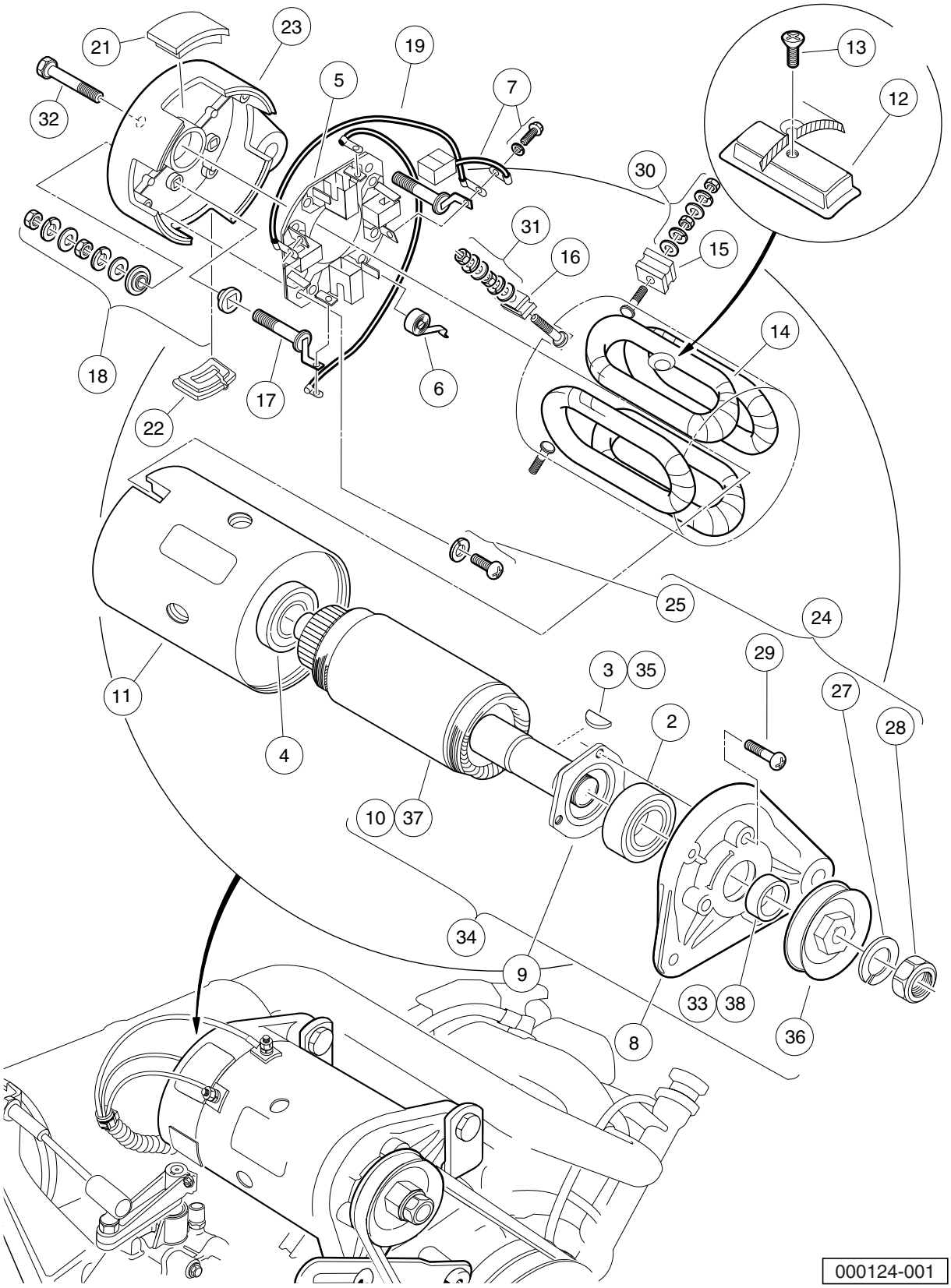
21
23
19
13
5
7
12
32
30
31
16
15
14
18
17
6
22
25
24
29
3
35
27
11
2
28
4
10
37
34
9
33
38
8
36
000124-001

STARTER/GENERATOR ASSEMBLY
MODEL G425419 – GASOLINE VEHICLES

ITEM	PART NO.	DESCRIPTION	QTY
		1 2 3 4	
1	101833701	Starter/Generator (cw) (includes items 2 through 33)	1
2	1013001	Bearing, Output Shaft Ball	1
3	1013003	Key, Starter/Generator	1
4	1013005	Bearing, Ball	1
5	101301102	Brush Holder Assembly (cw) (includes item 6)	1
6	101878101	Brush Spring Set	4
7	101869302	Brush and Screw Set (cw)	1
8	101874901	Front Bracket	1
9	101875001	Retainer	1
10	N/A	Armature	1
11	101875201	Field Coil Housing	1
12	101875301	Pole Set	1
13	101875401	Screw Set	1
14	101875501	Field Stator Coil Assembly	1
15	101875601	F Insulator Set	2
16	101875701	DF Insulator	1
17	101875802	A Connector (cw)	1
18	101876001	Screw and Mold Assembly	2
19	101876202	Brush Connector Assembly (cw)	2
20	101876301	Cover Set (includes items 21 and 22)	1
21	N/A	Brush Inspection Port Cover	3
22	N/A	Brush Port Cover w/Drain	1
23	101876402	Rear Bracket (cw)	1
24	101876501	Nut and Screw Set (includes items 25 through 29)	1
25	101896501	Brush Holder Asm Screw	2
26	N/A	Washer, M5 Flat	1
27	N/A	Washer, M14 Lock	1
28	N/A	Nut, Hex, M14 x 2	1
29	N/A	Screw, M5 x 0.8 x 18mm	3
30	101877601	Nut and Washer Set	2
31	101877701	Nut and Washer Set	1
32	101879001	Through Bolt Set	2
33	101939901	Spacer	1
34	101875102	Armature Asm Conversion Kit (includes items 35 through 38)	1
35	1013003	Key, Starter/Generator	1
36	1014289	Pulley, Starter/Generator	1
37	N/A	Armature	1
38	101939901	Spacer	1

Note: Item 36 will ONLY fit Model G425419 Starter/Generator.

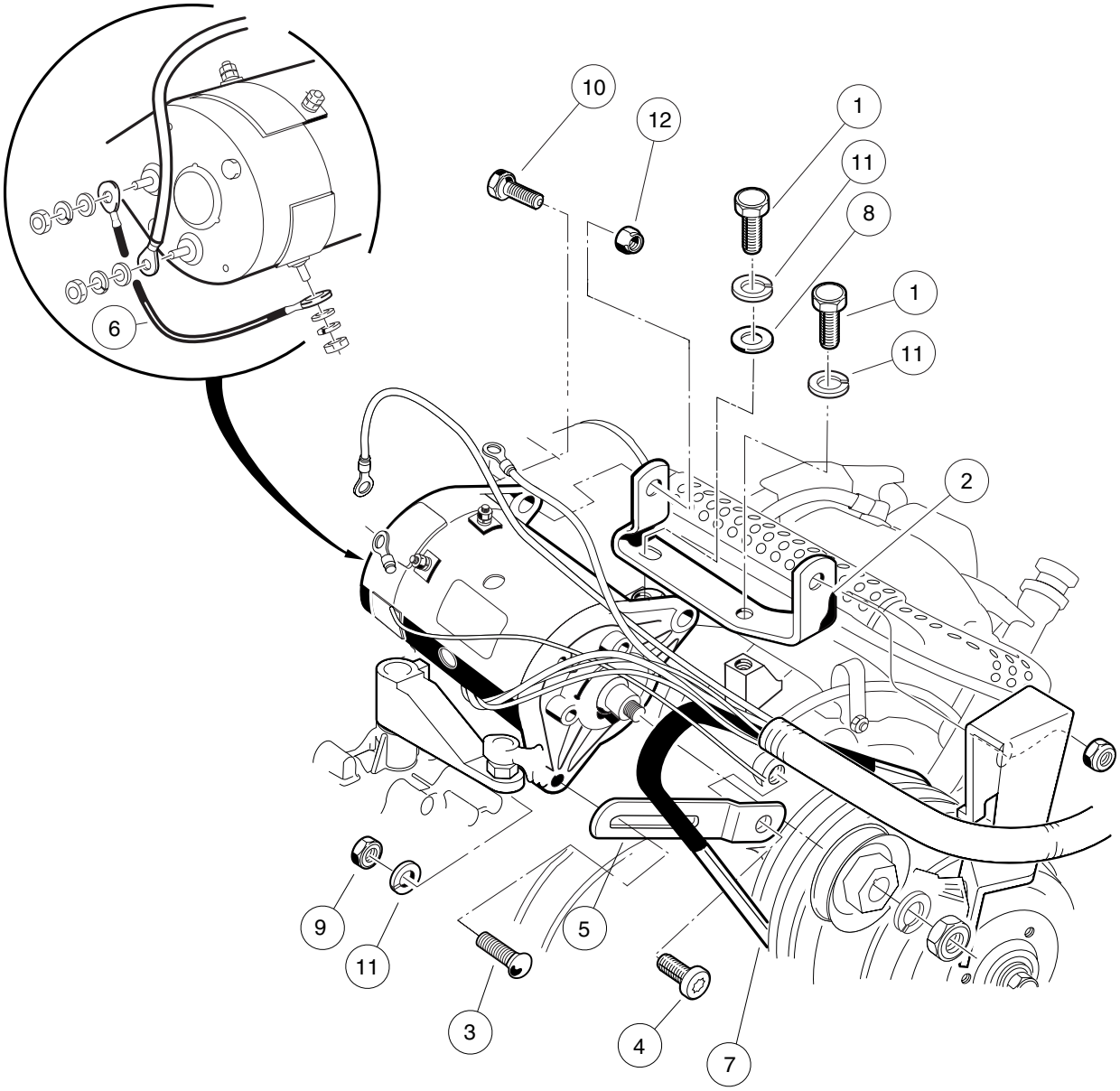

000238-004

STARTER/GENERATOR MOUNTING – FE350

ITEM	PART NO.	DESCRIPTION	QTY
		1 2 3 4	
1	1012830	Screw, M8-125 X 22 Hex-Head	2
2	101524002	Bracket, Starter/Generator Mounting	1
3	1015932	Bolt, Carriage, 5/16-18	1
4	1016074	Screw, M8-1.25 X 18mm Torx	1
5	1016883	Bracket, Starter/Generator Adjustment	1
6	101837301	Wire Assy, #6 Green	1
7	101916701	V-Belt	1
8	1241	Washer, 5/16 Type A Flat	1
9	1242	Nut, 5/16-18 Hex	1
10	1624	Screw, 3/8-16 X 1.50 Hex-Head Cap	2
11	7174	Lockwasher, 5/16 Split	3
12	8754	Locknut, 3/8-16 Hex	2

6

G

AS11 FE350 ENGINE

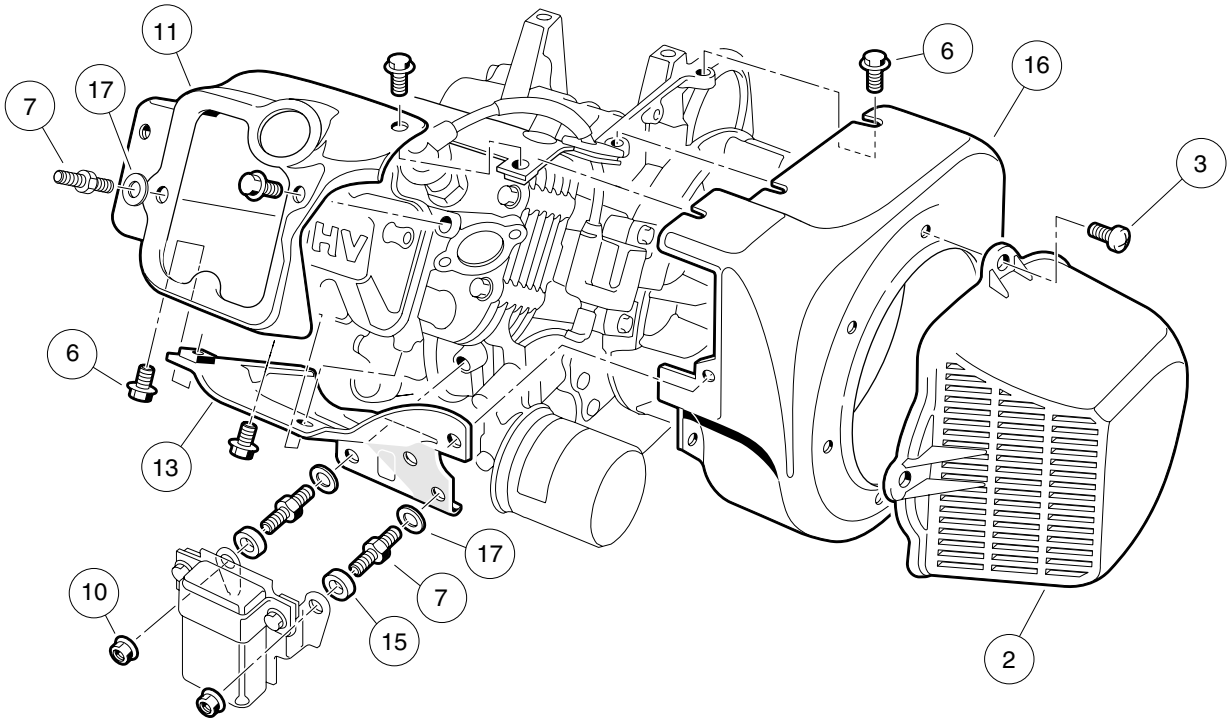

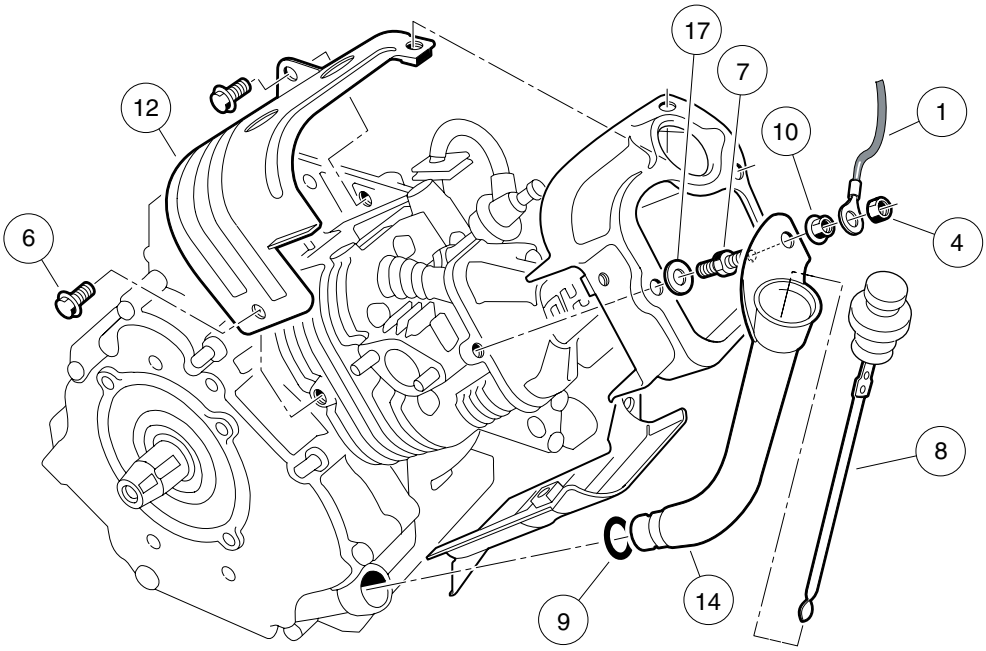

000201-001

AS11 FE350 ENGINE WITHOUT ACR (AUTOMATIC COMPRESSION RELEASE) – SHROUDS AND BRACKETS

ITEM	PART NO.	DESCRIPTION	QTY
		1 2 3 4	
1	1015332	Wire Assembly, #10, Uninsulated	1
2	1015649	Shroud, Fan	1
3	1015969	Screw, M6-1.00 X 10mm Pan Hd	4
4	101887601	Locknut, M6-1.00 Nylon Insert	1
5	101953802	Engine, FE350 (cw) without ACR * (includes items 6 through 17)	1
6	1016456	Bolt, Flange Head, M6 x 1 x 12 mm	14
7	1016507	Bolt, Two-Ended	3
8	1016531	Dipstick	1
9	1016539	O-Ring	1
10	1016547	Nut	3
11	1017474	Shroud, Engine	1
12	1017475	Shroud, Engine	1
13	1017476	Shroud, Engine	1
14	1017486	Tube, Oil Filler	1
15	1017500	Spacer 6.50 X 12 X 5.5	2
16	101916101	Housing, FE350 Fan	1
17	N/A	Washer, 6mm Flat	3

* Note: FE350 engine component listings span several pages.

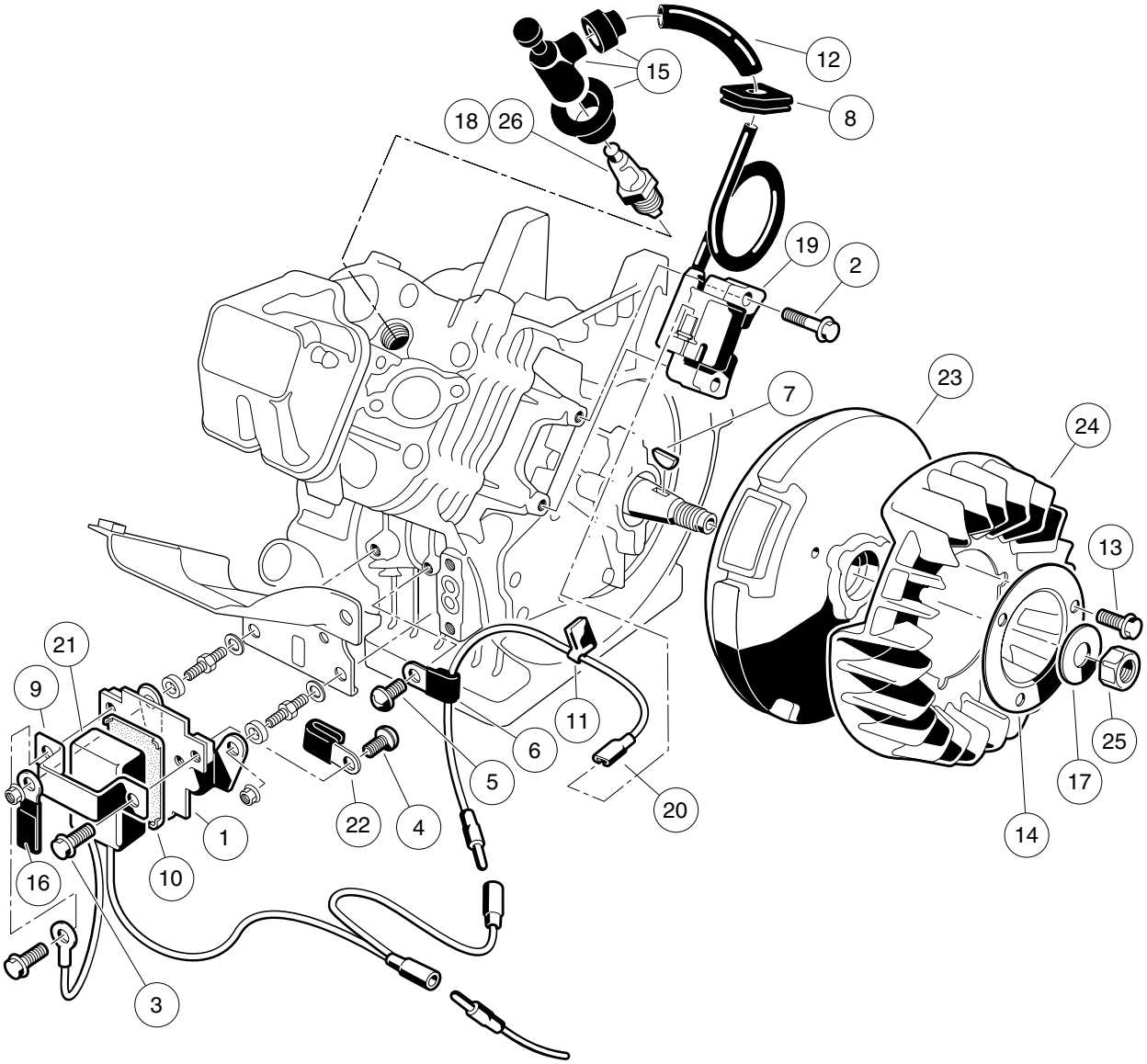

000202-001

AS11 FE350 ENGINE – IGNITION COMPONENTS AND FLYWHEEL

ITEM	PART NO.	DESCRIPTION	QTY
		1 2 3 4	
1	1016445	Bracket, RPM Limiter	1
2	1016455	Bolt, Flange Head	2
3	1016456	Bolt, Flange Head, M6 x 1 x 12 mm	2
4	1016497	Screw, Pan WP Cross	1
5	1016544	Screw	1
6	1016561	Clamp	1
7	1016562	Key	1
8	1016578	Grommet	1
9	1016579	Band, RPM Limiter Mount	1
10	1016586	Damper, RPM Limiter	1
11	1016587	Clamp	1
12	1016588	Tube, 7mm X 10mm X 70mm	1
13	1017448	Bolt, Flanged	3
14	1017455	Plate, Flywheel Fan	1
15	1017463	Cap Asm Plug	1
16	1017468	Clamp	1
17	1017490	Washer, Flat	1
18	101881101	Spark Plug, OHV (Autolite)	1
19	101909201	Coil, Ignition	1
20	101909301	Lead Wire Assy	1
21	101909401	Limiter, RPM	1
22	N/A	Clamp, Steel	1
23	101916201	Flywheel	1
24	101916301	Fan (cw)	1
25	N/A	Nut, Hex, 18 mm Fine	1
26	AM10724	Spark Plug, OHV (NGK)	1

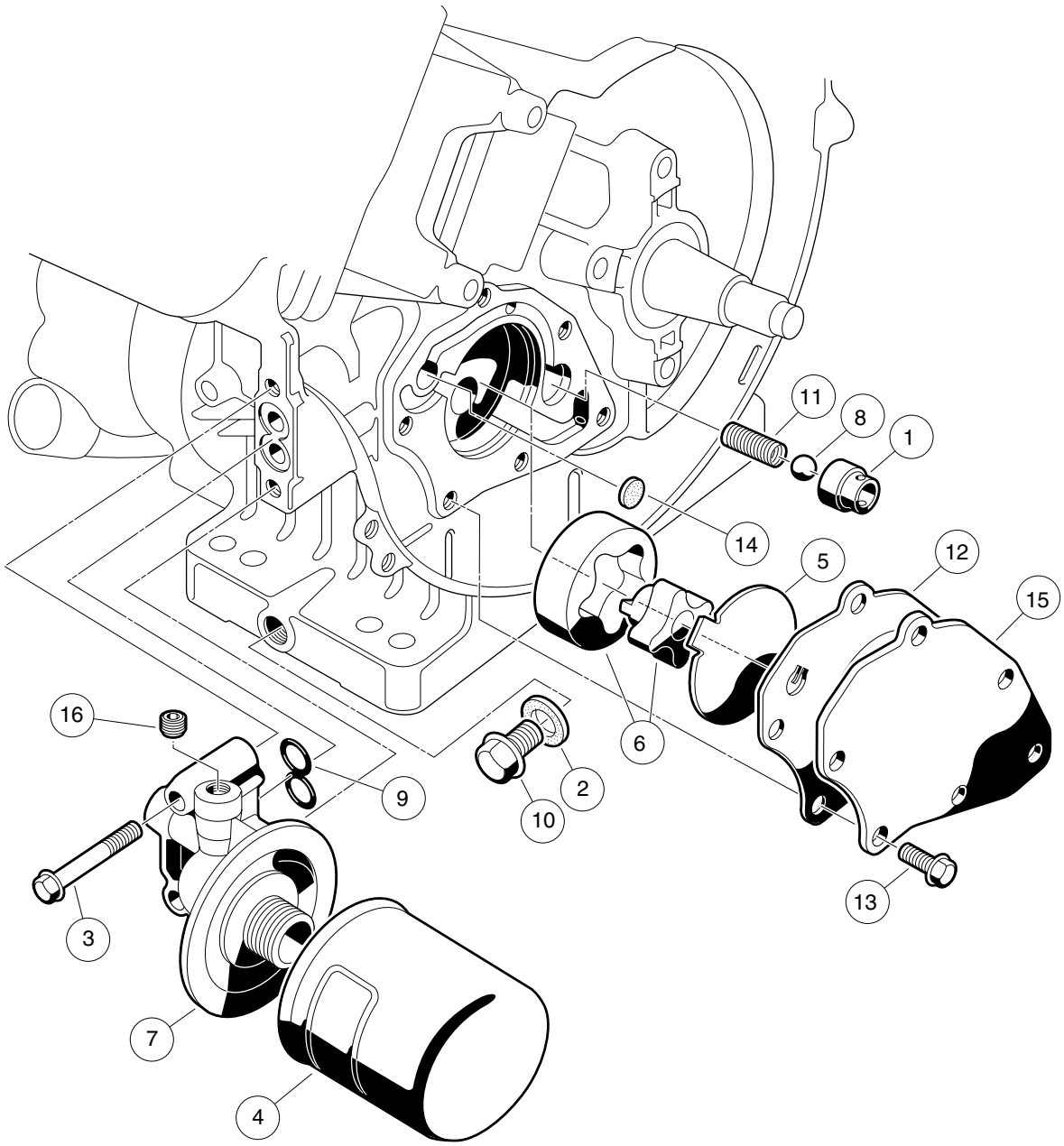

000203-001

FE350 ENGINE – OIL CIRCULATION

ITEM	PART NO.	DESCRIPTION	QTY
		1 2 3 4	
1	1016429	Seat, Value Oil Press Relief	1
2	1016432	Gasket, Drain Plug	1
3	1016457	Bolt, Flange Head	2
4	1016467	Filter, Oil	1
5	1016473	Plate, Oil Pump	1
6	101648203	Oil Pump And Rotor	1
7	1016502	Bracket, Oil Filter Mount	1
8	1016537	Ball, Steel, Press, Relief	1
9	1016570	O-Ring	1
10	1016576	Plug, Drain	1
11	1016581	Spring	1
12	1017442	Gasket	1
13	1017456	Bolt, Flanged	6
14	1017458	Filter	1
15	1017460	Cover, Pump	1
16	1017507	Plug	2

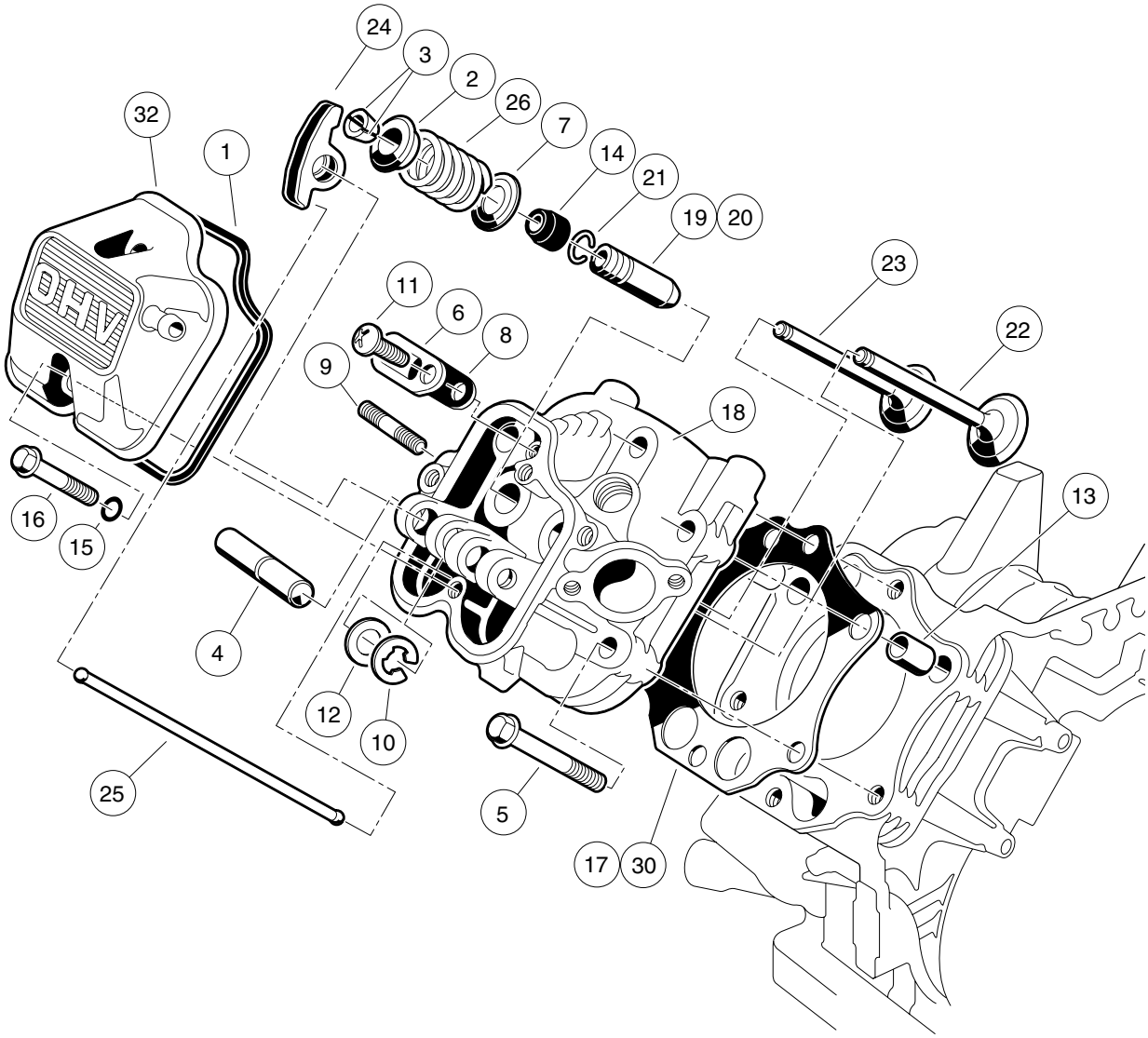

000204-001

AS11 FE350 ENGINE – CYLINDER HEAD

ITEM	PART NO.	DESCRIPTION	QTY
		1 2 3 4	
1	1016436	Gasket, Rocker Case	1
2	1016449	Retainer, Valve Spring	2
3	1016450	Collet	4
4	1016452	Shaft, Rocker	1
5	1016458	Bolt, Flange Head, M8 x 1.25 x 45 mm	6
6	1016474	Plate	1
7	1016479	Seat, Spring	2
8	1016483	Valve	1
9	1016489	Stud, Two-Ended, M8-1.25	2
10	1016517	Circlip, Type-E	1
11	1016544	Screw	1
12	1016549	Washer, 12.1x19x1.8	1
13	1016563	Pin	2
14	1016566	Seal, Oil	2
15	1016569	O-Ring	2
16	1016583	Bolt, 6x35	2
17	1017434	Gasket, Head	1
18	1017435	Assembly, Cylinder Head, FE350 (includes items 19 through 21)	1
19	1016518	Guide, Valve, Exhaust	1
20	1016519	Guide, Valve	1
21	1016560	Snap Ring	2
22	1017444	Valve, Intake	1
23	1017445	Valve, Exhaust	1
24	1017446	Arm, Rocker	2
25	1017454	Rod, Push	2
26	1017473	Spring, Engine Valve	2
27	102304801	Kit, Gasket, FE350 (includes items 28 through 31)	1
28	1016440	Gasket, Engine to Insulator	1
29	1016904	Gasket, Exhaust	1
30	1017434	Gasket, Head	1
31	1017443	Gasket, Crankcase Cover	1
32	102753401	Case, Rocker -w/o Logo Fe290	1

Note: Item 28 is not a component of the FE350 engine.

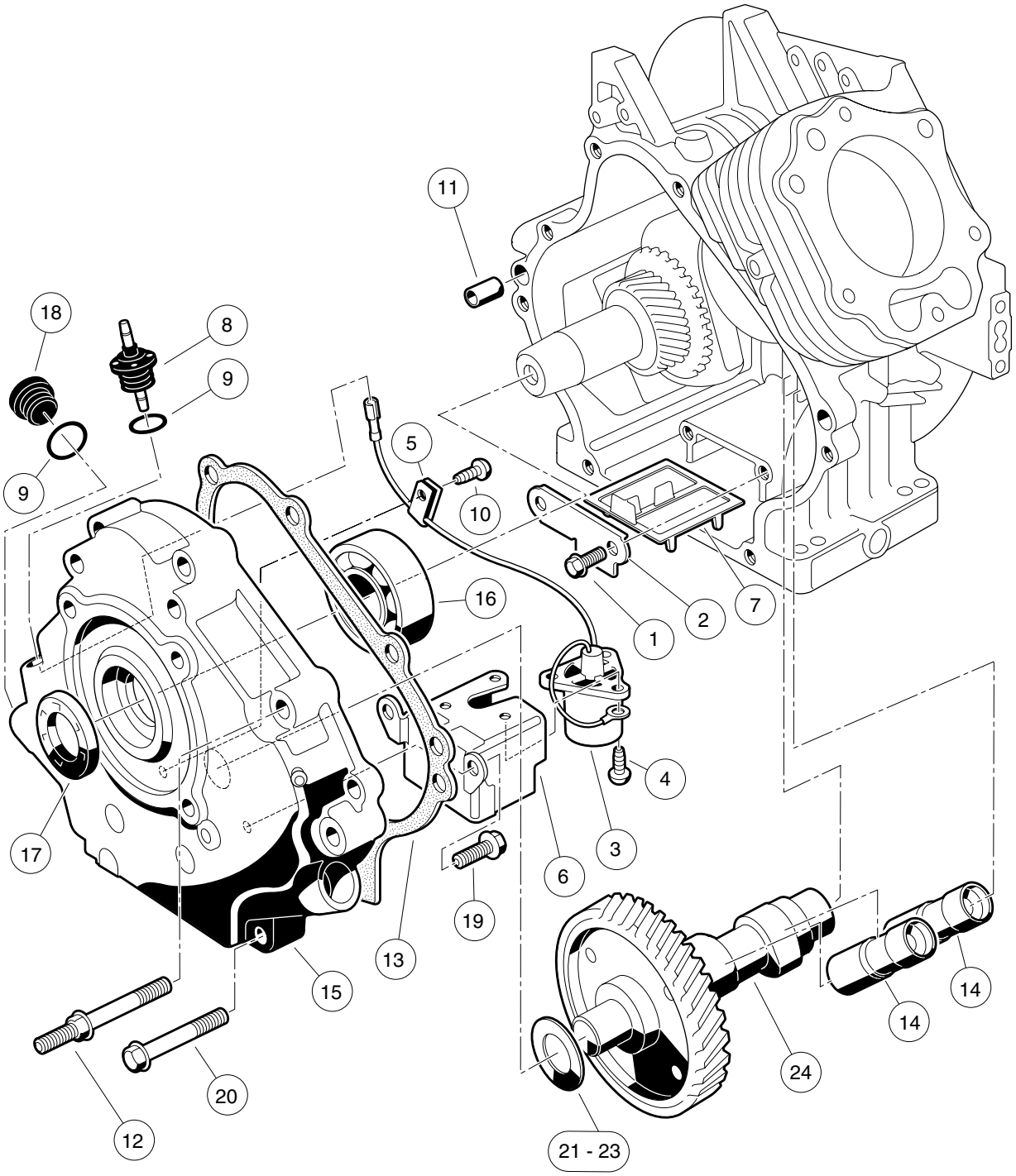

000205-002

AS11 FE350 ENGINE WITHOUT ACR – CRANKCASE, CAMSHAFT, AND OIL SENSOR

ITEM	PART NO.	DESCRIPTION	QTY
		1 2 3 4	
1	1016454	Bolt, Flange Head, M5 x 0.8 x 8 mm	2
2	1016472	Plate, Oil Filter Screen	1
3	1016494	Sensor, Oil Level	1
4	1016496	Screw, Cross Pan-Head, M4 x 0.7 x 8 mm	3
5	1016506	Clamp	1
6	1016510	Bracket, Switch, Oil Level	1
7	1016521	Screen, Oil Filter	1
8	1016535	Connector, Cord	1
9	1016538	O-Ring	2
10	1016544	Screw	1
11	1016564	Pin	2
12	1016584	Bolt, Two-Ended, M8 x 1.25 x 69 mm	2
13	1017443	Gasket, Crankcase Cover	1
14	1017447	Adjuster, Lash	2
15	1017472	Cover Crankcase	1
16	1017487	Bearing, Ball	1
17	1017504	Seal, Oil	1
18	1017508	Plug	1
19	1017513	Bolt	2
20	1017514	Screw, M8-1.25 X 45mm Hex	6
21	101751801	Shim, 0.3	A/R
22	101751802	Shim, 0.4	A/R
23	101751803	Shim, 0.5	A/R
24	102431001	Camshaft, FE350 without ACR, 44-Tooth	1

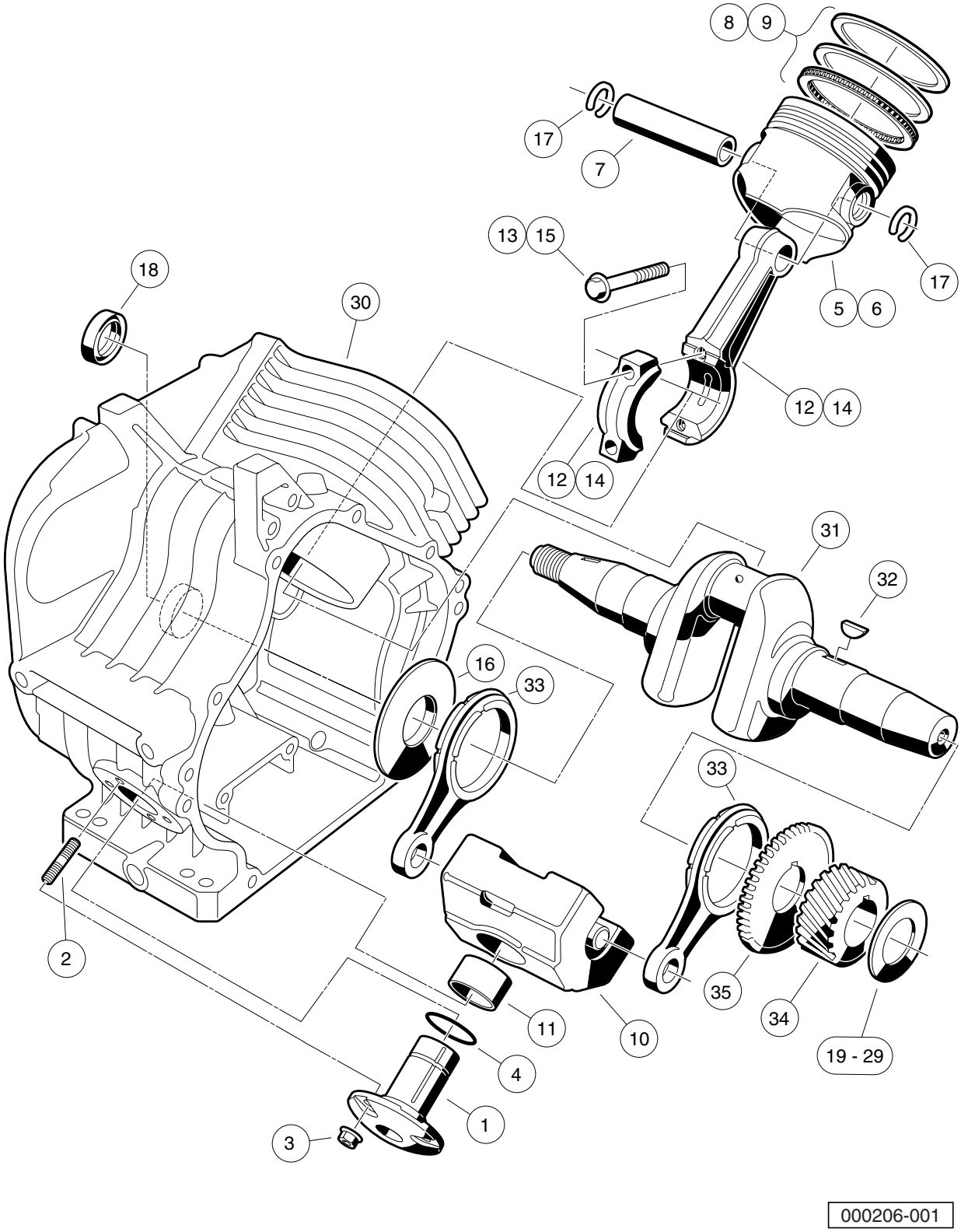
8
9
17
7
13
15
17
18
30
5
6
12
14
12
14
31
32
16
33
33
2
35
34
11
10
19 - 29
4
1
3
000206-001

AS11 FE350 ENGINE – CRANKCASE AND CRANKSHAFT

ITEM	PART NO.	DESCRIPTION	QTY
		1 2 3 4	
1	1016470	Shaft, Guide, Counterbalance	1
2	1016541	Stud, 6x14	4
3	1016547	Nut	4
4	1016571	O-Ring	1
5	101744901	Piston, Standard	1
6	101744902	Piston, 0.50 mm Oversize	1
7	1017450	Pin, Piston	1
8	101745101	Ring Set, Standard Piston	1
9	101745102	Ring Set, Piston, 0.50 mm Oversize	1
10	1017453	Weight (includes item 11)	1
11	1017510	Bearing, Plain	1
12	101745701	Asm, Con. Rod Std (includes item 13)	1
13	1017512	Bolt	2
14	101745702	Rod Assembly Connnecting Rod 0.5mm (includes item 15)	1
15	1017512	Bolt	2
16	1017501	Spacer	1
17	1017502	Snap Ring	2
18	1017503	Seal, Oil	1
19	101773301	Shim, Crankshaft, 1.18mm	A/R
20	101773302	Shim, Crankshaft, 1.25mm	A/R
21	101773303	Shim, Crankshaft, 1.32mm	A/R
22	101773304	Shim, Crankshaft, 1.39mm	A/R
23	101773305	Shim, Crankshaft, 1.46mm	A/R
24	101773306	Shim, Crankshaft, 1.53mm	A/R
25	101773307	Shim, Crankshaft, 1.60mm	A/R
26	101773308	Shim, Crankshaft, 1.67mm	A/R
27	101773309	Shim, Crankshaft, 1.74mm	A/R
28	101773310	Shim, Crankshaft, 1.11mm	A/R
29	101773311	Shim, Crankshaft, 1.81mm	A/R
30	101916001	Crankcase Complete, FE350 (cw)	1
31	102430901	Crankshaft, FE350 Left-Hand, 22-Tooth (includes items 32 through 35)	1
32	1016562	Key	1
33	1017471	Rod	2
34	N/A	Gear, Helical	1
35	N/A	Gear, Spur	1

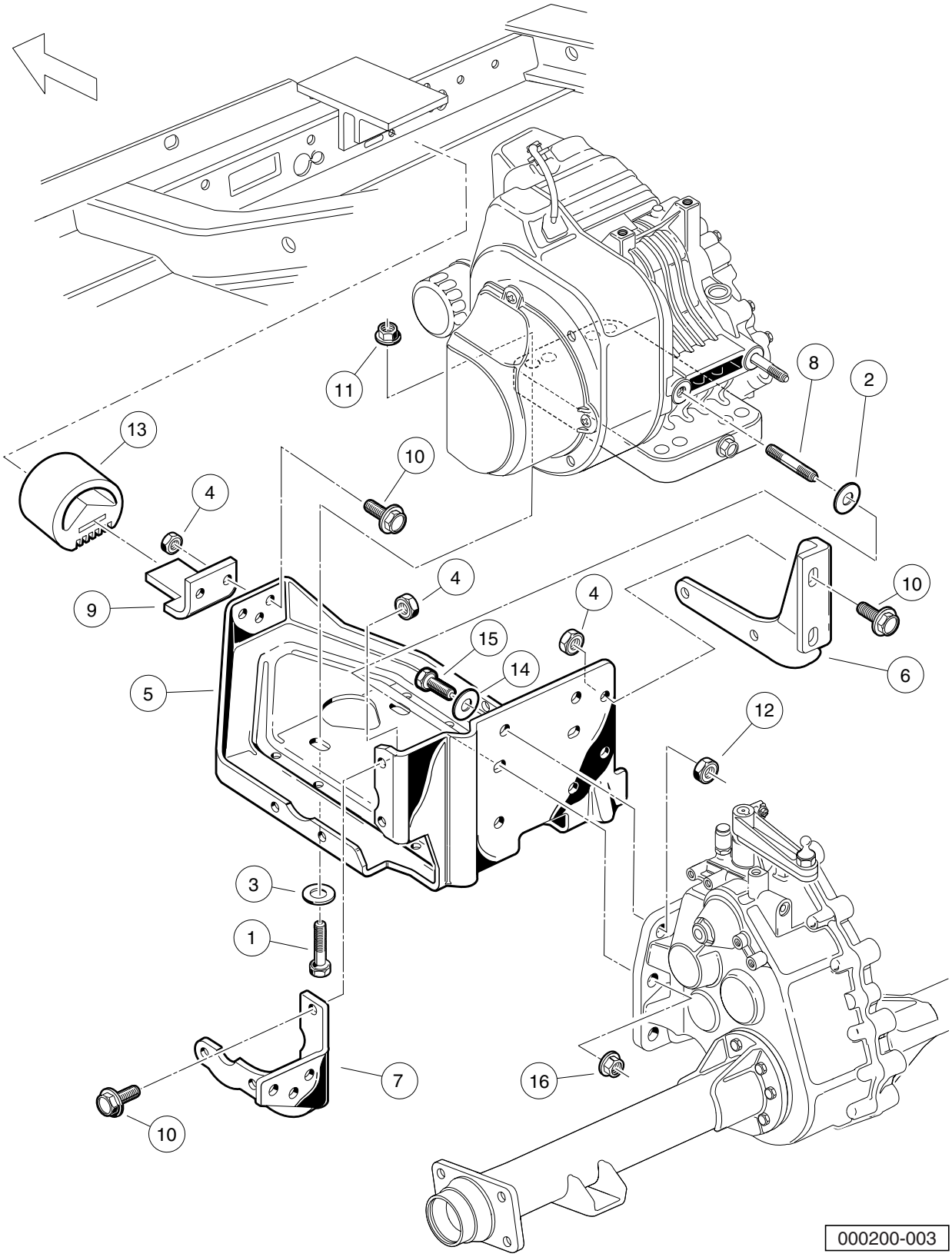
11
8
2
13
10
4
4
4
10
9
15
14
6
5
12
3
1
7
16
10
000200-003

FE350 ENGINE MOUNTING

ITEM	PART NO.	DESCRIPTION	QTY
		1 2 3 4	
1	1010577	Bolt, Hex-Head, 5/16-18 X 1.50	4
2	1011697	Washer, 5/16 Flat	2
3	1012571	Washer, 5/16 Extra Thick Flat	4
4	1013924	Nut, 5/16-24 Hex Head Cone	10
5	101827101	Plate, Engine Mounting	1
6	101832601	Stiffener (PTO Side)	1
7	101832701	Stiffener (Flywheel Side)	1
8	101833101	Stud, M8-1.25 X 50 mm Two-Ended	2
9	101834601	Snubber Bracket	1
10	101884801	Screw, 5/16-24 X 0.875 Grade-8	10
11	101963401	Locknut, 5/16-18 Hex Flange	4
12	102065901	Locknut, 3/8-16 Flanged Dimple	4
13	102540301	Inner Frame Snubber	1
14	334	Washer, 3/8 Type A Flat	4
15	705	Screw, Cap-hex Hd 3/8-16x1.25	4
16	96704416	Nut Flg, M8 X 1.25 Serrated	2

FUEL, INTAKE, AND GOVERNOR SYSTEMS

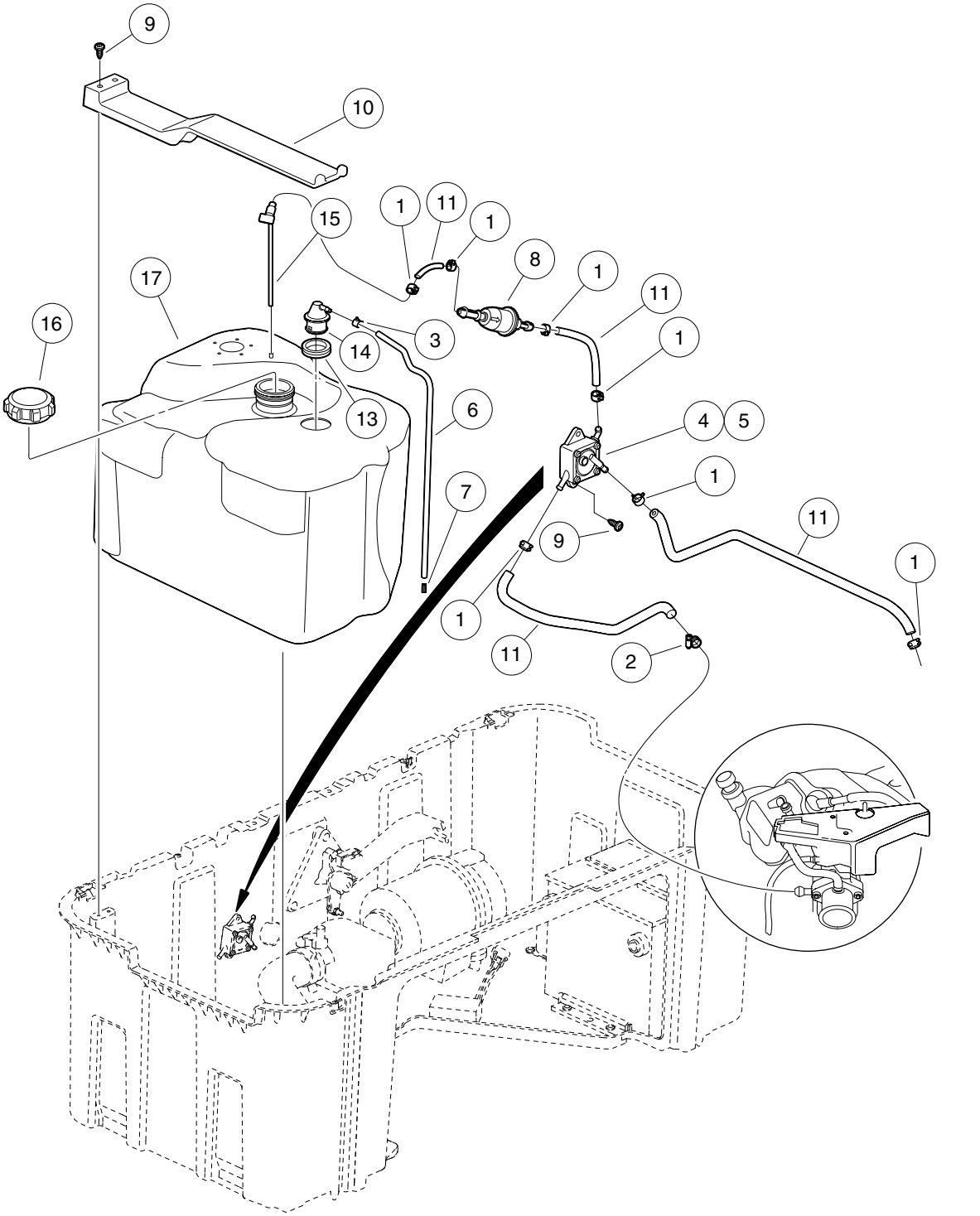

000449-001

ITEM	PART NO.	DESCRIPTION	QTY
		1 2 3 4	
1	1012649	Clamp, 0.460 Red Hose	7
2	1013687	Clamp, 3/8" Hose (screw type)	1
3	1013746	Clamp, 0.301 ID Hose	2
4	1014523	Pump, Impulse Fuel	1
5	1014524	Kit, Impulse Pump Rebuild	1
6	1015137	Fuel Line (available by the foot)	A/R
7	101824401	Vent Barb	1
8	102003201	Filter, Fuel, 30 Micron	1
9	102296020	Screw, Torx Pan Hd Pt, M6 X 20	2
10	102514201	Hold-down - Fuel Tank	1
11	102865101	Fuel Line	A/R
12	102952202	Asm, Tank, Fuel (includes items 13 through 17)	1
13	1015139	Insulation Grommet	1
14	1015143	Vent, Fuel Tank	1
15	102513701	Valve - Fuel Pickup Tube	1
16	102751601	Cap, Fuel Tank, Gasoline	1
17	N/A	Tank, Fuel, Prec	1

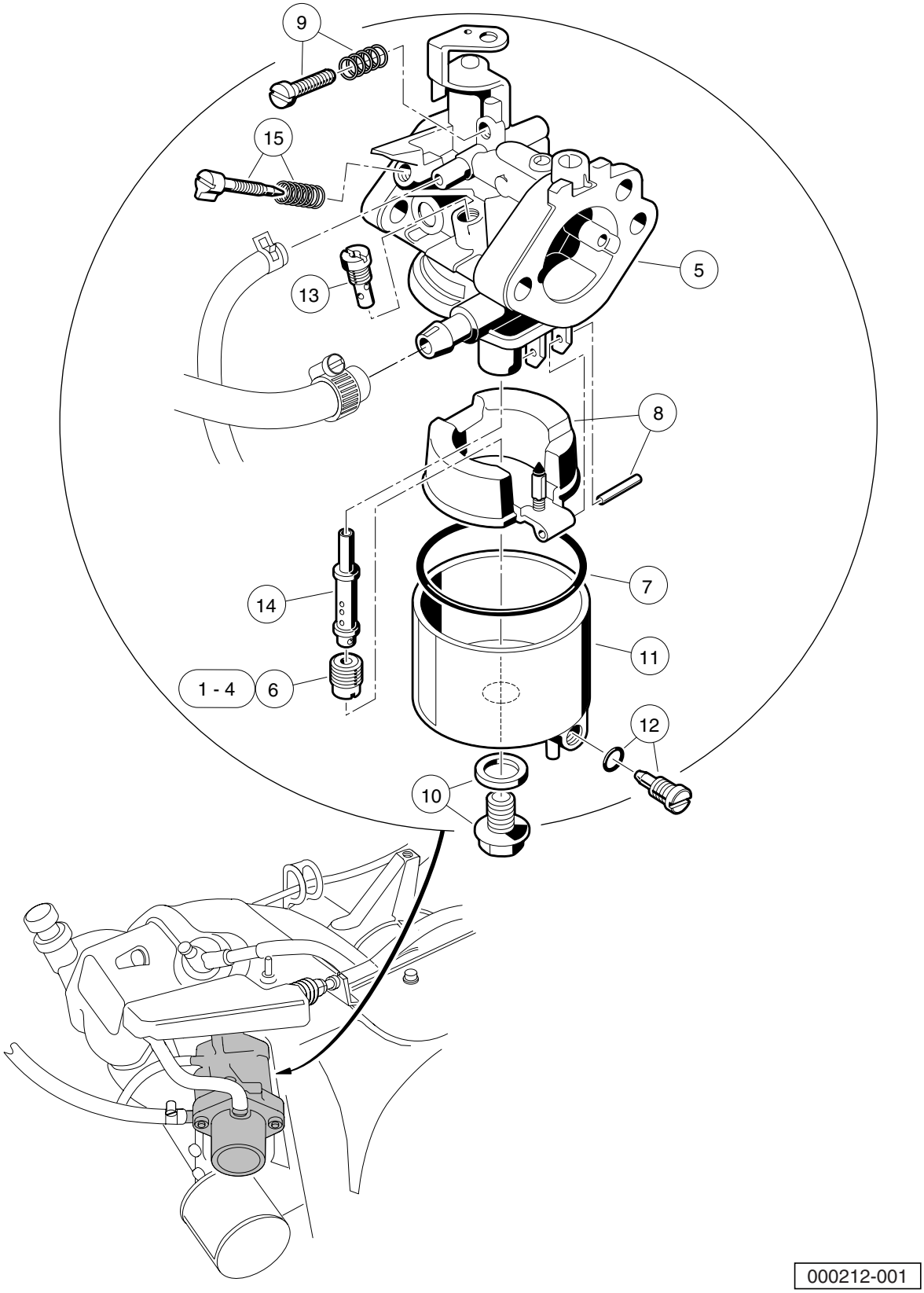
9
15
13
5
8
7
14
11
1 - 4
6
12
10
000212-001

CARBURETOR ASSEMBLY – FE350

ITEM	PART NO.	DESCRIPTION	QTY
		1 2 3 4	
1	101642575	Jet, Altitude, # 75	A/R
2	101642578	Jet, Altitude, # 78	A/R
3	101642580	Jet, Altitude, # 80	A/R
4	101642582	Jet, Altitude, # 82	A/R
5	101905901	Carburetor, FE350D (includes items 6 through 15)	1
6	101642585	Jet, Altitude, # 85	1
7	1016437	Gasket, Carburetor Bowl OHV	1
8	1016486	Float Assembly	1
9	1016501	Screw Assembly	1
10	1016585	Bolt	1
11	1017461	Chamber Assembly, Float (includes item 12)	1
12	1016499	Screw Assembly	1
13	101973101	Jet, #40 Pilot	1
14	101973301	Nozzle, Main	1
15	N/A	Assembly, Pilot Air Screw	1

Note: 101642585 for 0 - 3,000 feet; 101642582 for 3,000 - 5,000 feet; 101642580 for 5,000 - 8,000 feet; 101642578 for 8,000 - 10,000 feet; 101642575 for 10,000 feet and higher.

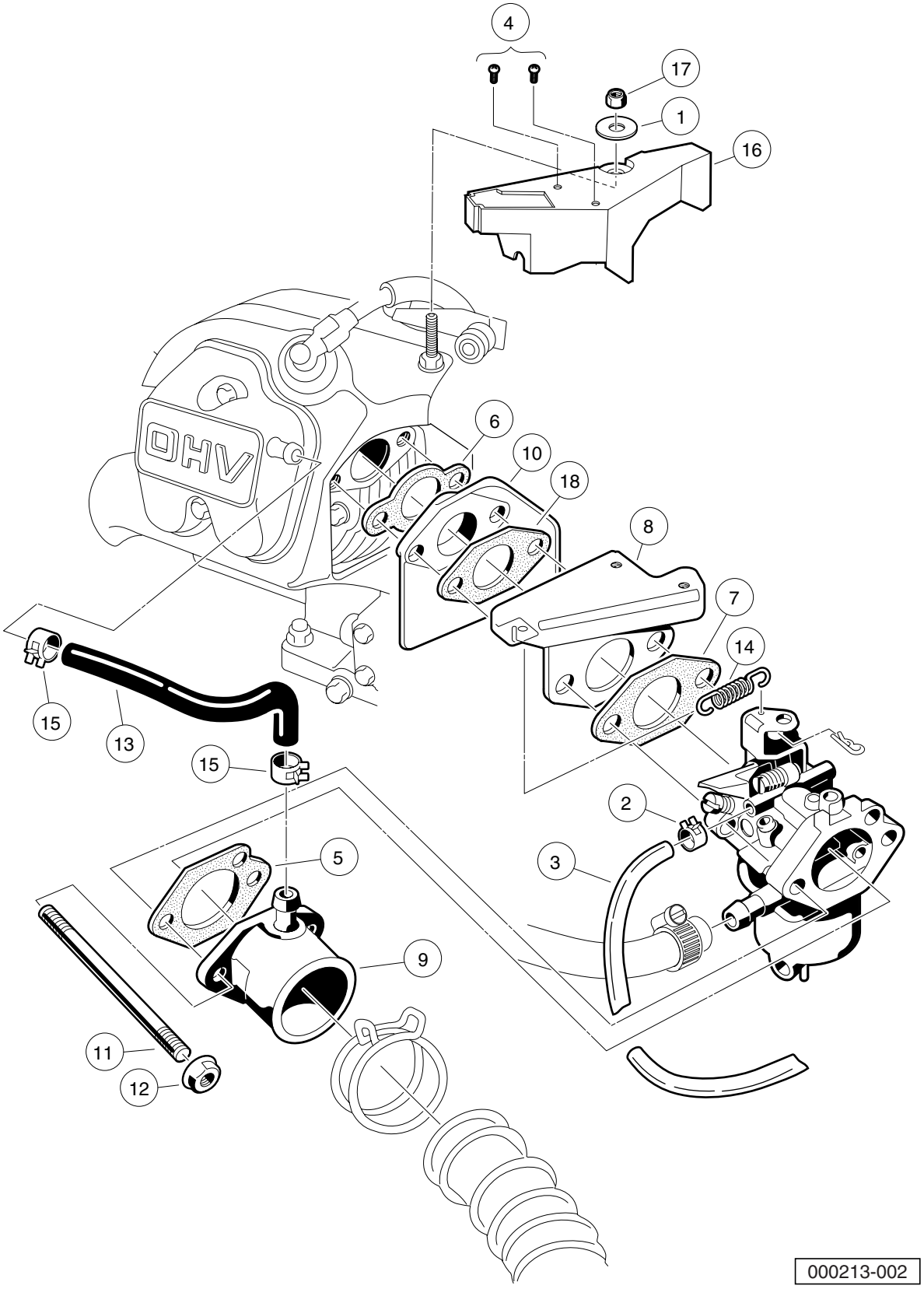
4
17
1
16
OHV
6
10
18
8
7
14
15
13
15
2
5
3
9
11
12
000213-002

CARBURETOR INSTALLATION – FE350

ITEM	PART NO.	DESCRIPTION	QTY
		1 2 3 4	
1	1011697	Washer, 5/16 Flat	1
2	1013746	Clamp, 0.301 ID Hose	1
3	1015137	Fuel Line (available by the foot)	1
4	1016103	Screw, Pan Hd Tx, Taptite 6-32	2
5	1016438	Gasket, Carb To Intake Manifold	1
6	1016440	Gasket, Engine to Insulator	1
7	1016441	Gasket, Sprg Brkt To Carb OHV	1
8	1016444	Bracket, Throttle Spring Return	1
9	1016480	Pipe, Intake Manifold	1
10	101648102	Insulator, Carburetor	1
11	101649002	Stud, M6-1.00 Two-Ended	2
12	1016547	Nut	2
13	1016572	Tube, Crankcase Vent	1
14	1016582	Spring, Throttle Return	1
15	1017466	Clamp	2
16	101820201	Shield, Governor	1
17	101887601	Locknut, M6-1.00 Nylon Insert	1
18	101973401	Gasket, Insulator To Bracket	1

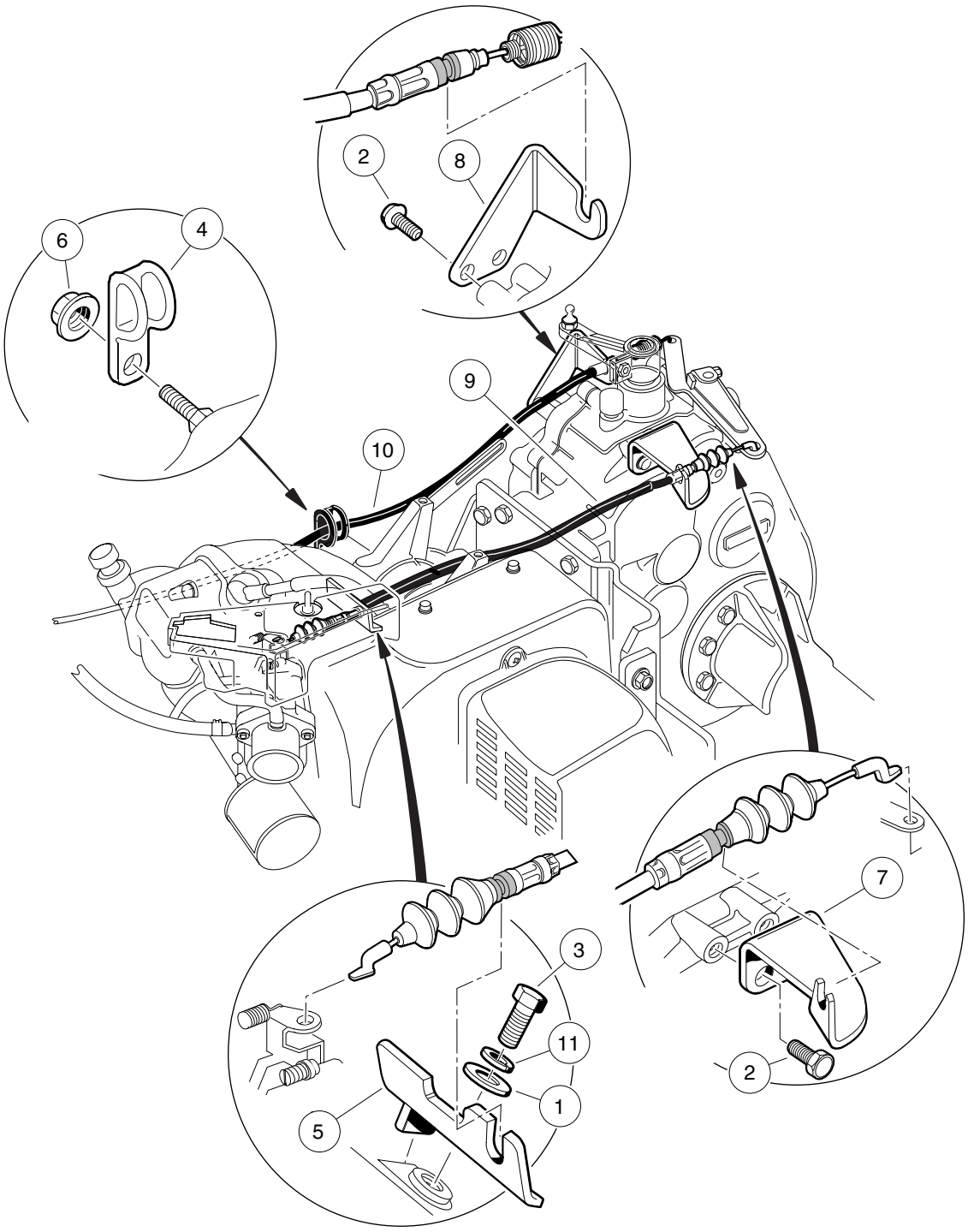

000215-001

GOVERNOR AND ACCELERATOR CABLES

ITEM	PART NO.	DESCRIPTION	QTY
		1 2 3 4	
1	1011697	Washer, 5/16 Flat	1
2	1012285	Screw, 1/4 X 0.625 Hex-Head	4
3	1012830	Screw, M8-125 X 22 Hex-Head	1
4	1013700	Clamp	2
5	101584502	Bracket, Governor Cable Snap-In	1
6	1016546	Nut	2
7	101832202	Bracket, Rear Governor Cable Snap-In	1
8	101832302	Bracket, Rear Accelerator Cable Snap-In	1
9	102336001	Cable, Governor, Snap-In	1
10	102513102	Cable, Acc, Snap-in	1
11	7174	Lockwasher, 5/16 Split	1

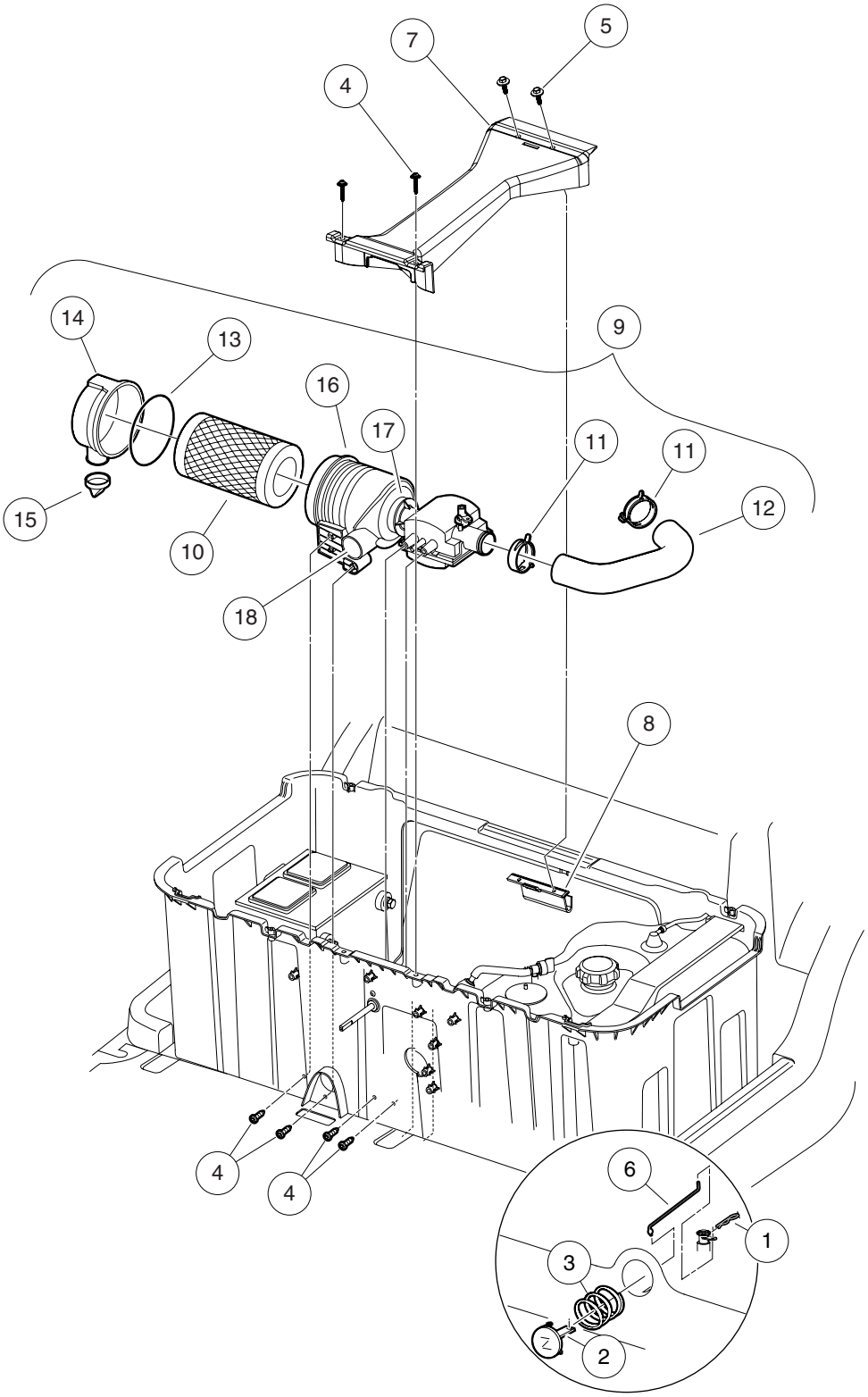

000484-001

CHOKE AND AIR BOX ASSEMBLY

ITEM	PART NO.	DESCRIPTION	QTY
		1 2 3 4	
1	1014413	Pin, Hair Spring Cotter	1
2	101811401	Lever, Choke	1
3	101856201	Compression Spring	1
4	102296020	Screw, Torx Pan Hd Pt, M6 X 20	6
5	102297125	Screw M6-1.0x25.4 Thd Fm Sems	2
6	102514401	Rod, Choke Button	1
7	102521301	Brace, Gas Fuel Bucket	1
8	102521401	Support, Gas Bucket Brace	1
9	102588301	Air Intake Assy (includes items 10 through 16)	1
10	102558201	Air Filter, Precedent	1
11	102558301	Clamp, Air Intake, Prec	2
12	102558401	Hose, Air Intake, Prec	1
13	102558501	Gasket, Air Intake, Prec	1
14	102558601	Cover Asm, Air Intake, Prec	1
15	102558701	Evac Valve, Air Intake, Prec	1
16	N/A	Assembly, Body Intake (includes items 17 and 18)	1
17	N/A	Filter Element, Air Intake	1
18	N/A	Insert, Air Intake Body	1

8

G

EXHAUST SYSTEM

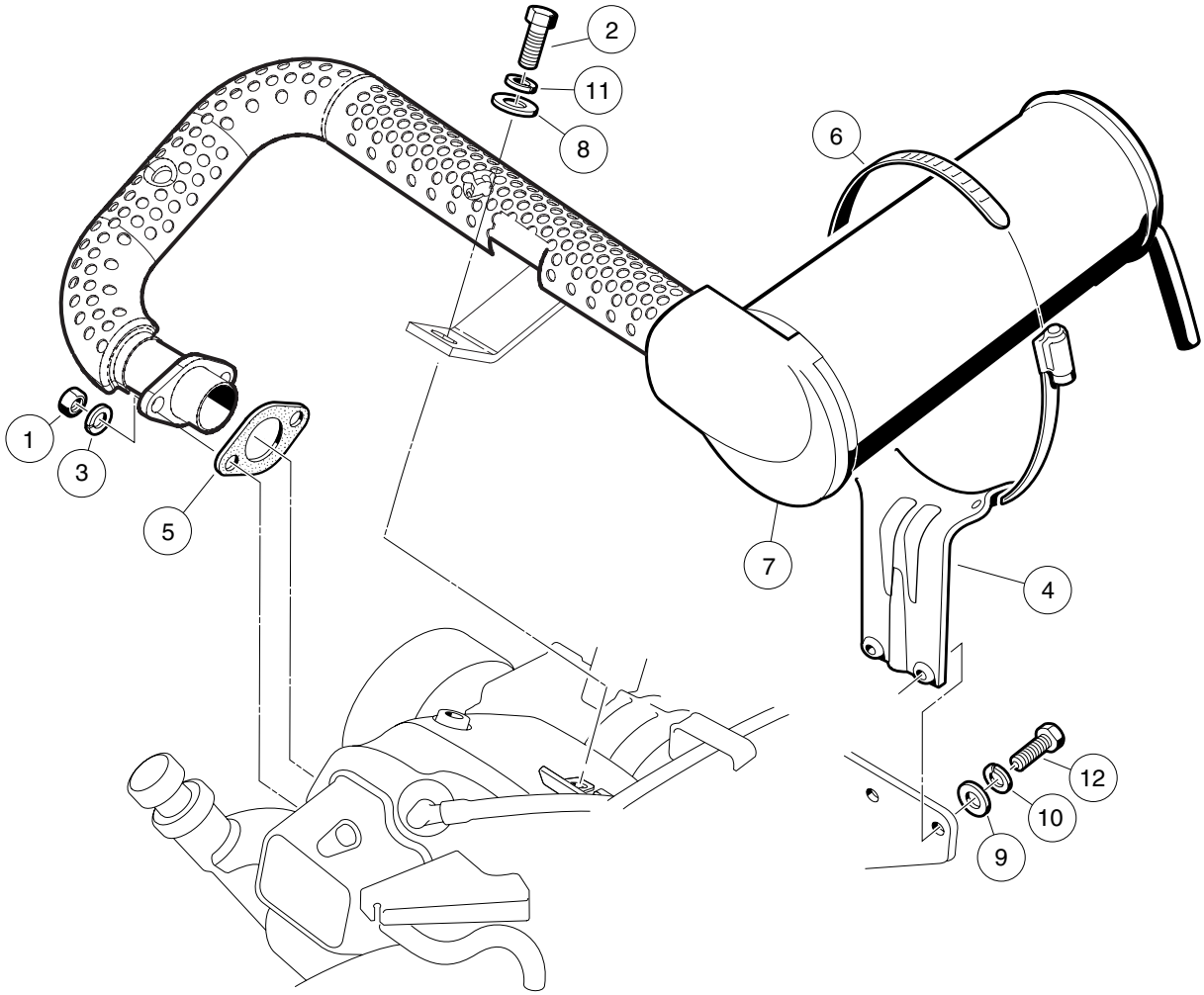

000491-001

EXHAUST SYSTEM – FE350

ITEM	PART NO.	DESCRIPTION	QTY
		1 2 3 4	
1	1012528	Nut, M8-1.25 Hex	2
2	1012830	Screw, M8-125 X 22 Hex-Head	1
3	1013734	Lockwasher, 8mm Split	2
4	1015814	Bracket, Muffler Mounting	1
5	1016904	Gasket, Exhaust	1
6	1017689	Clamp, 5" Muffler Hose	1
7	102585901	Exhaust System, FE350, Precedent	1
8	1241	Washer, 5/16 Type A Flat	1
9	332	Washer, 1/4 Type A Narrow Flat	2
10	451	Lockwasher, 1/4 Helical Split	2
11	7174	Lockwasher, 5/16 Split	1
12	7847	Screw, 1/4-20 X 0.75 Hex-Head Cap	2

TORQUE CONVERTER

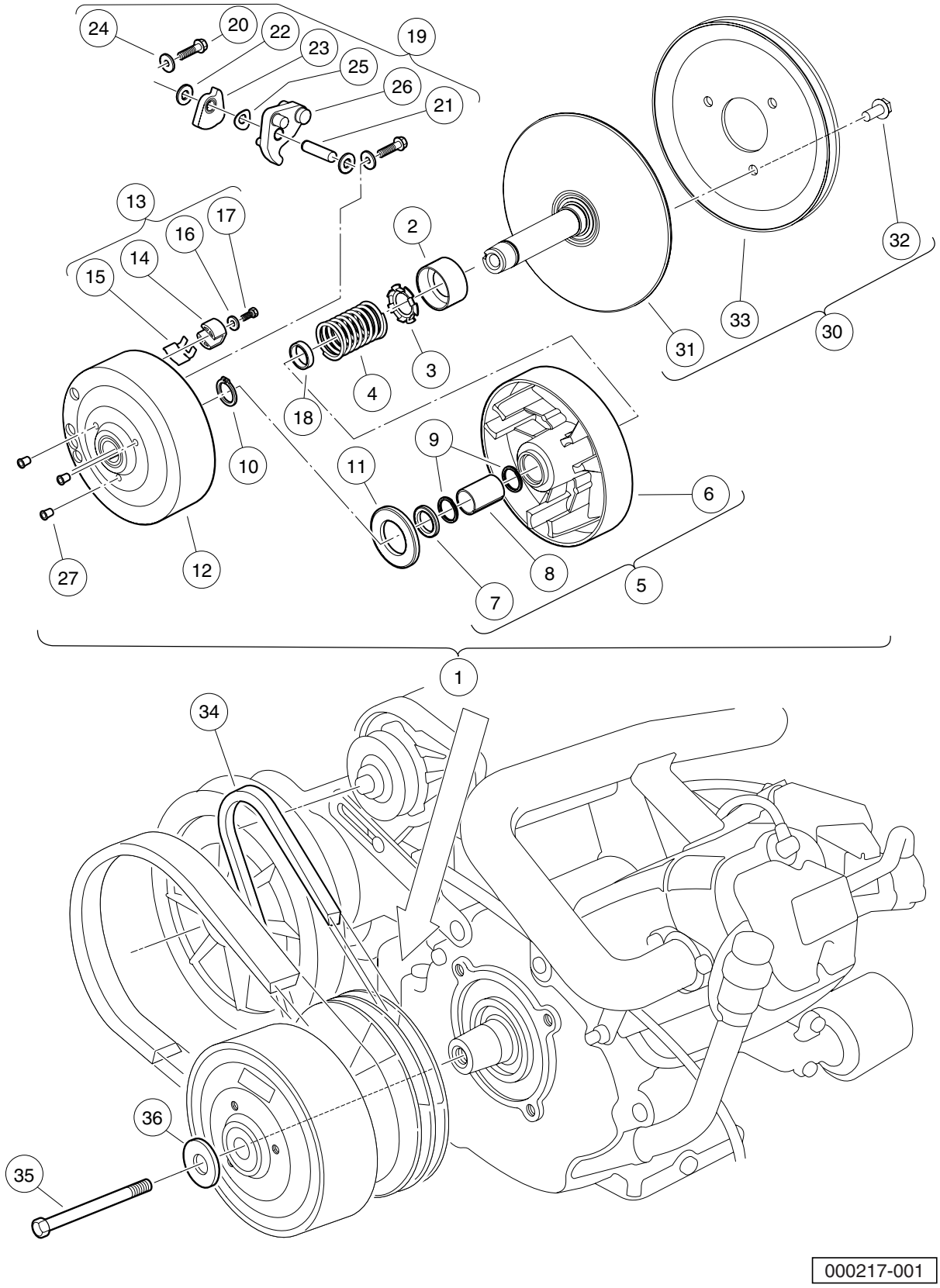
24
20
22
23
25
26
21
19
13
17
16
14
15
2
32
33
31
30
3
4
18
10
9
11
6
27
12
8
7
5
1
34
36
35
000217-001

DRIVE CLUTCH

ITEM	PART NO.	DESCRIPTION	QTY
		1 2 3 4	
1	101833902	Clutch, Drive (includes items 2 through 28)	1
2	1014049	Bearing, Idler	1
3	1014050	Retainer, Spring	1
4	1014051	Spring, Drive Clutch	1
5	1014052	Movable-Face Assembly (includes items 6 through 8)	1
6	N/A	Drive Clutch Movable Face	1
7	1014055	Retainer	1
8	N/A	Bushing, Split, Drive Clutch	1
9	1014056	Ring, Spiral Backup	2
10	1014057	Ring, 0.810" Internal Retaining	1
11	1014058	Washer, Thrust	1
12	1014059	Drive Hub Assy, Drive Clutch	1
13	1014453	Kit, Drive Clutch Button (includes items 14 through 17)	1
14	1014062	Driver, Drive Clutch	3
15	1014287	Spring, Drive Button	3
16	183	Washer, #10 Type A Flat	3
17	8450	Screw, #10-24 X 0.50 Hex-Head	3
18	1016289	Spacer, Fixed Face Shaft	1
19	1016801	Kit, Drive Clutch Weight (includes items 20 through 26)	1
20	1014063	Screw, 1/4-20 X 1.00 Hex Head	6
21	N/A	Pin, 0.3752 X 1.50 Dowel	3
22	1014065	Washer, 0.38" ID Delrin Flat	6
23	N/A	Clutch Weight, Secondary	3
24	N/A	Washer	6
25	1016201	Washer, Wave	3
26	N/A	Weight, Primary	3
27	N/A	Plug, Drive Clutch	3
28	101929802	Kit, Fxd Face Dr Asm Fe290/350 (includes items 29 and 30)	1
29	N/A	Desiccant Bag (Not Shown)	1
30	N/A	Assembly, Fixed-Face Drive (includes items 31 through 33)	1
31	N/A	Fixed Face Assembly, Drive Clutch	1
32	1014288	Screw, 5/16-18 X 0.75 Thread-Forming	3
33	N/A	Pulley, Clutch	1
34	101916701	V-Belt	1
35	103345701	Screw 3/8-24x5.5 Hex Loc Ptch	1
36	808	Washer, 3/8 Type B Flat	1

Note: Item 29 not shown.

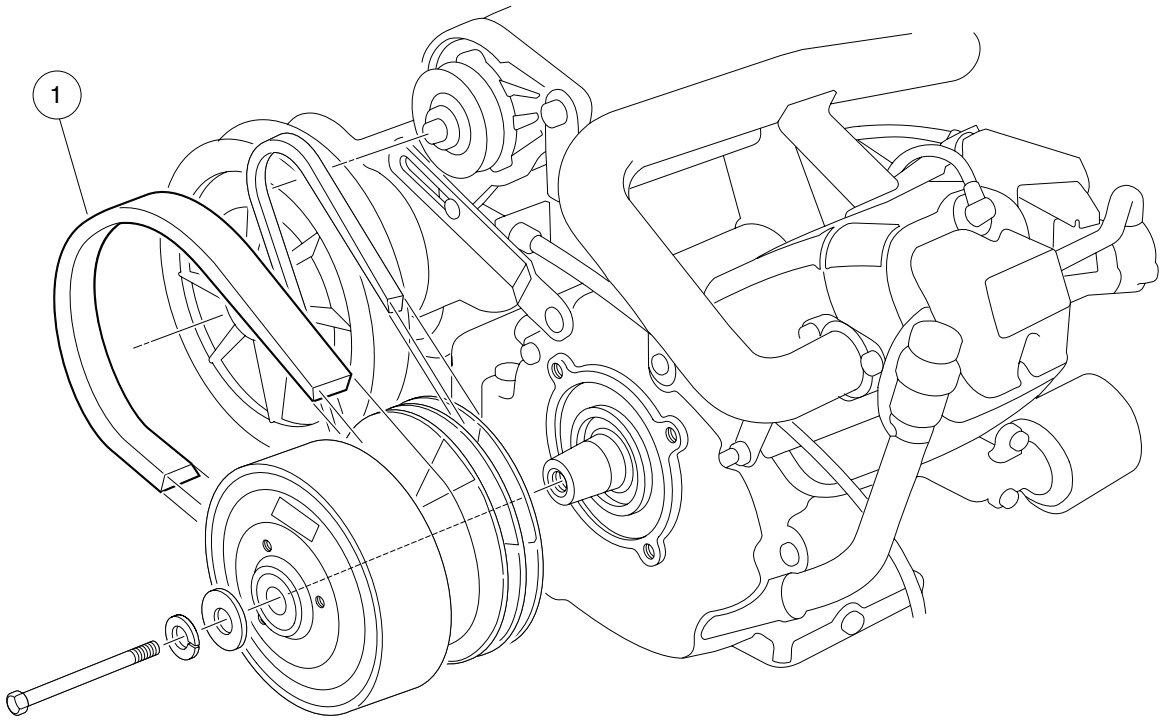

000218-001

DRIVE BELT

ITEM	PART NO.	DESCRIPTION	QTY
1	1016203	1 2 3 4 Belt, Drive	1

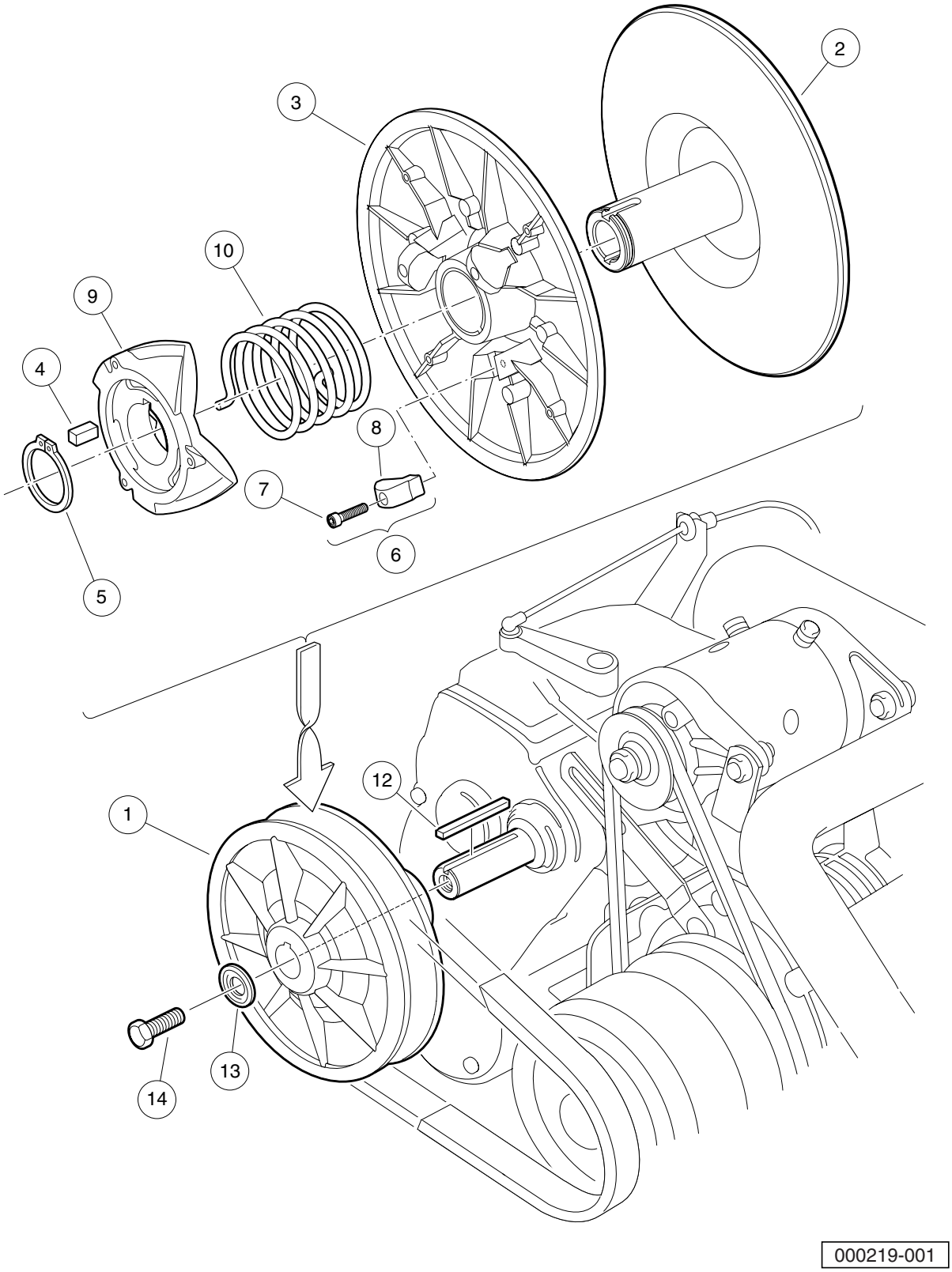
2
3
10
9
4
8
7
6
5
12
1
13
14
000219-001

DRIVEN CLUTCH

ITEM	PART NO.	DESCRIPTION	QTY
		1 2 3 4	
1	101834001	Assembly, Driven Clutch (includes items 2 through 10)	1
2	1014070	Fixed Face Assy, Driven Clutch	1
3	1014072	Movable-Face Assembly with Bushing	1
4	1014078	Key, Driven Clutch	1
5	1014080	Ring, Retaining	1
6	1014454	Kit, Driven Clutch Button (includes items 7 and 8)	1
7	1012836	Screw, #8-32 X 3/4 Socket-Head Cap	3
8	N/A	Button, Drive	3
9	1017686	Cam, Driven Clutch	1
10	101836201	Spring, Driven Clutch, Reversed	1
11	AM10419	Kit, Clutch Repair (includes items 12 through 14)	1
12	101833401	Key, 3/16 Sq X 1.50"	1
13	N/A	Washer, Driven Clutch	1
14	102242101	Screw, 5/16-18 X 3/4 Hex-Head with Patch	1

10

G

UNITIZED TRANSAXLE

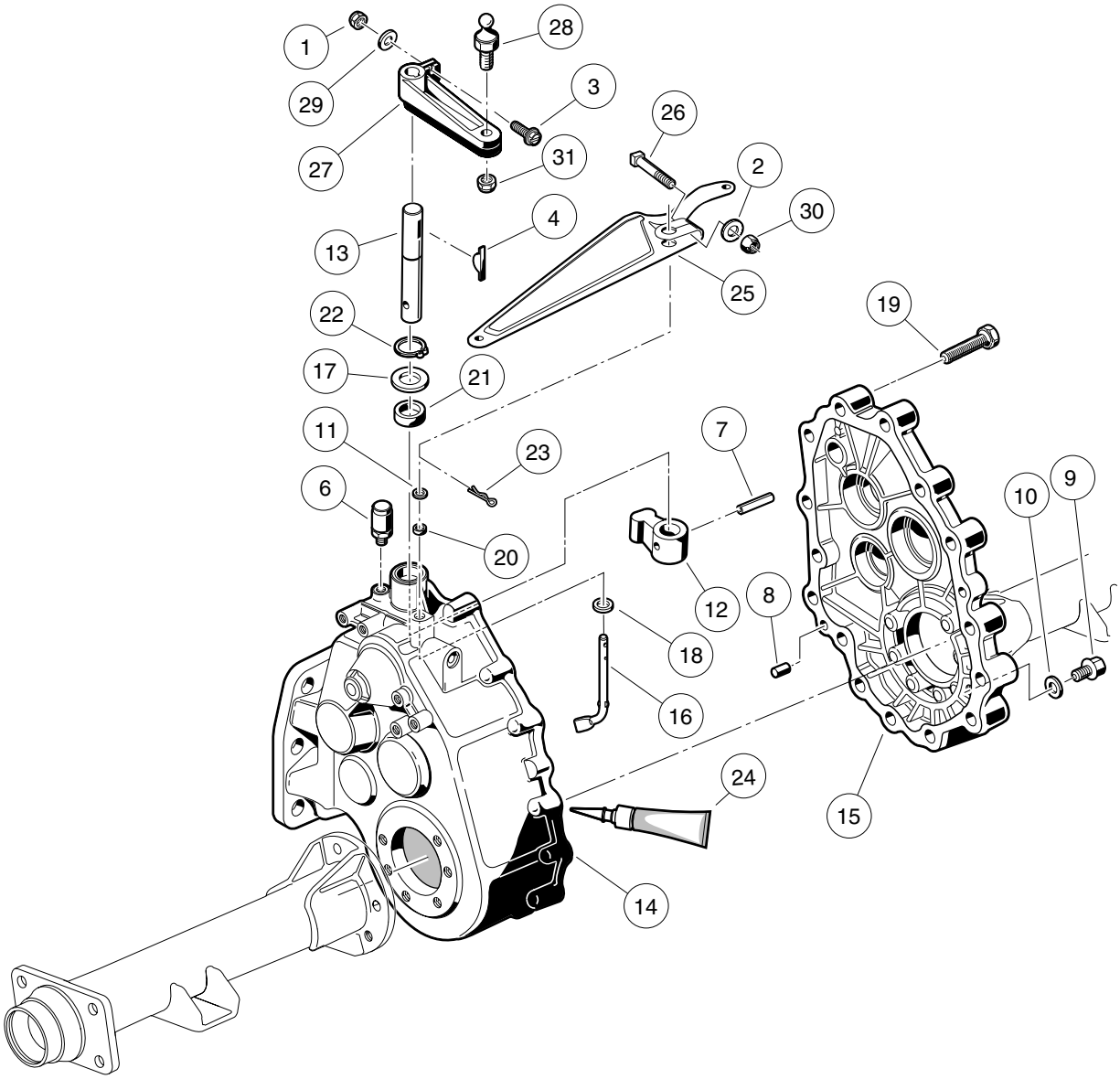
1
28
29
3
26
27
31
2
30
4
13
25
19
22
17
21
11
7
23
6
10
9
20
12
8
18
16
24
15
14

000220-002

UNITIZED TRANSAXLE – GEAR CASES AND BRACKETS

ITEM	PART NO.	DESCRIPTION	QTY
		1 2 3 4	
1	1013061	Locknut, #10-32 Nylon Insert	1
2	1014007	Washer, 1/4 Flat	1
3	1017082	Screw, #10-32 X 0.75, Hex-Head Machine	1
4	1017231	Key, Woodruff	1
5	101833601	Transaxle, 11.77 Ratio (includes items 6 through 24)	1
6	1012711	Breather	1
7	1012752	Roll Pin	1
8	1012896	Pin, Dowel	2
9	1013760	Fill Plug	2
10	1016432	Gasket, Drain Plug	1
11	1016513	Washer, M6 Flat	1
12	101890101	Lever, Change	1
13	101890201	Shaft - Change	1
14	101890501	Gear Case (driver side)	1
15	101890601	Gear Case (passenger side)	1
16	101891301	Arm Pivot	1
17	101892901	Washer	1
18	101893801	Washer	1
19	101926901	Screw, M8-1.25 X 40mm Hex-Head	15
20	101927101	Seal, Oil	1
21	101927201	Seal, Oil	1
22	101927301	Snap Ring	1
23	101928601	Pin, Cotter	1
24	101928701	Liquid Gasket (Transaxle case)	A/R
25	101834801	Arm, Governor	1
26	101886101	Screw, 1/4-20 X 1.00 Square-Head	1
27	102515401	Lever, Transmission Shift	1
28	102526201	Stud, Thread, 1/4-28	1
29	183	Washer, #10 Type A Flat	1
30	8233	Locknut, 1/4-20 Nylon Insert	1
31	8717	Locknut, 1/4-28 Nylon Insert	1

Note: Unitized transaxle component listings span several pages.

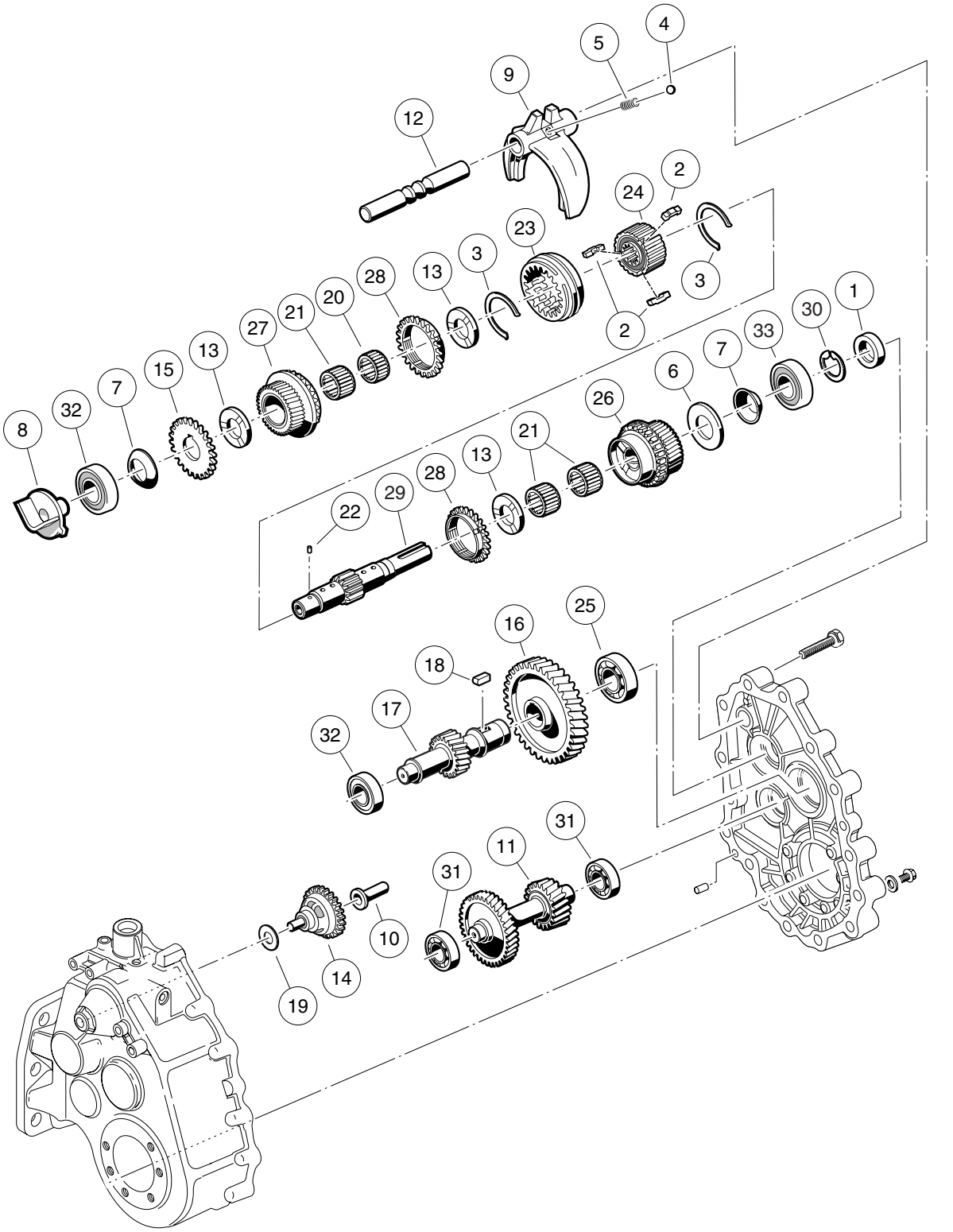
4
5
9
12
2
24
23
3
13
28
20
21
27
15
7
32
8
1
30
33
7
6
26
21
13
28
29
22
25
16
18
17
32
31
11
31
10
14
19
000221-001

UNITIZED TRANSAXLE – F&R TRANSMISSION AND GEAR REDUCTION

ITEM	PART NO.	DESCRIPTION	QTY
		1 2 3 4	
1	1012714	Oil Seal	1
2	1012740	Synchro Insert	3
3	1012741	Synchro Spring	2
4	1012747	Shifter Ball	1
5	1012748	Shifter Spring	1
6	1016337	Washer, Thrust	1
7	1016338	Washer, Spring	2
8	101889401	Guide	1
9	101890001	Fork - Shift	1
10	101891601	Sleeve, Governor	1
11	101891901	Gear, Cluster	1
12	101892001	Rod, Shift	1
13	101892201	Plate, Thrust	3
14	101892301	Governor Assembly	1
15	101892401	Gear, Spur	1
16	101892501	Gear, Helical (61 Tooth)	1
17	101892601	Gear, Helical (17 Tooth)	1
18	101893201	Key Sunk	1
19	101893901	Washer	1
20	101927501	Needle Bearing	1
21	101927601	Needle Bearing	3
22	101927701	Pin, .116" Dia X 0.264 Dowel	1
23	101927901	Sleeve, Synchro	1
24	101928001	Hub, Synchro Clutch	1
25	101928101	Bearing, Ball	1
26	101980801	Gear Assembly, 16-Degree Synchro (25 Tooth)	1
27	101980901	Gear Assembly, 16-Degree Rear Synchro (28 Tooth)	1
28	101981001	Ring, 16-Degree Synchronizer	2
29	102453001	Shaft, Trans, with Circlip	1
30	102453101	Circlip	1
31	7335	Bearing	2
32	AM10080	Bearing, Ball, Sealed	2
33	AM10081	Bearing, Ball, Sealed	1

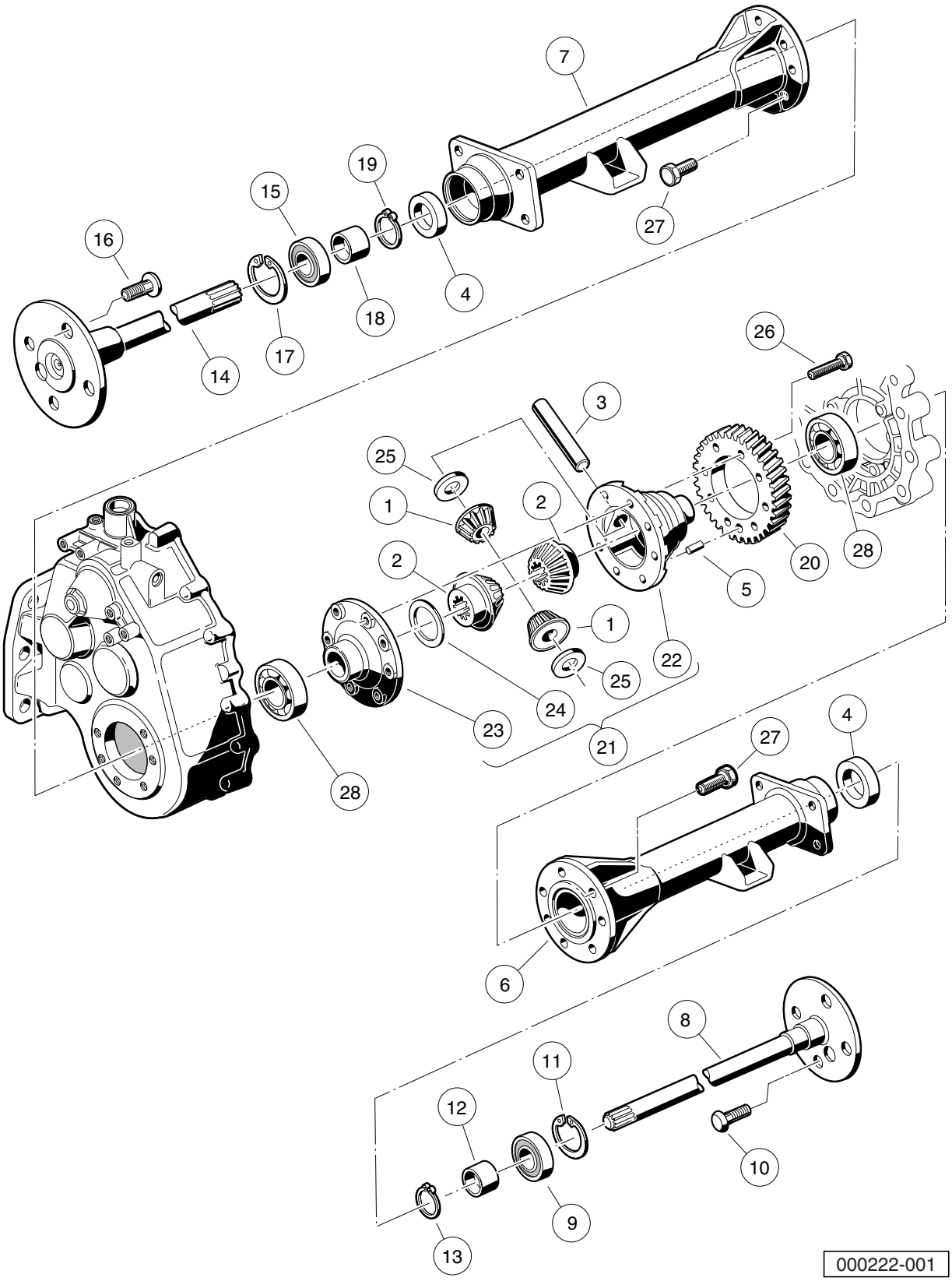
7
19
15
16
27
4
18
17
14
26
3
25
1
2
2
20
28
5
1
22
25
24
23
21
28
4
27
6
8
11
12
10
9
13
000222-001

TRANSAXLE – GASOLINE VEHICLES, DIFFERENTIAL AND AXLES

ITEM	PART NO.	DESCRIPTION	QTY
		1 2 3 4	
1	1013770	Differential Idler Gear	2
2	1013771	Gear, Differential	2
3	1013772	Pin, Differential	1
4	1013794	Axle Shaft Oil Seal	2
5	N/A	Dowel Pin	1
6	101890901	Pipe	1
7	101891001	Pipe	1
8	101891401	Axle Assembly, Passenger Side (includes items 9 through 13)	1
9	1011291	Outer Axle, Tube Bearing	1
10	1013787	Lug Stud	4
11	1013792	Circlip Type C	1
12	1014207	Bushing	1
13	1016672	Retaining Ring	1
14	101891501	Axle Assembly, Driver-Side (includes items 15 through 19)	1
15	1011291	Outer Axle, Tube Bearing	1
16	1013787	Lug Stud	4
17	1013792	Circlip Type C	1
18	1014207	Bushing	1
19	1016672	Retaining Ring	1
20	101892701	Gear, Helical	1
21	101910501	Kit, Differential Gear Case (includes items 22 through 25)	1
22	1013768	Differential Gear Case, Left-Hand	1
23	1013769	Differential Gear Case, Right-Hand	1
24	1013773	Plate, Thrust (Differential Gear)	1
25	1013774	Plate, Thrust (Idler Gear)	2
26	101928301	Screw, M8-1.25 X 35mm Hex Head	8
27	102031901	Bolt, M10 X 1.5 X 30mm	14
28	7330	Inner Axle Tube Bearing	2

Note: Items listed on this page are components of the unitized transaxle.

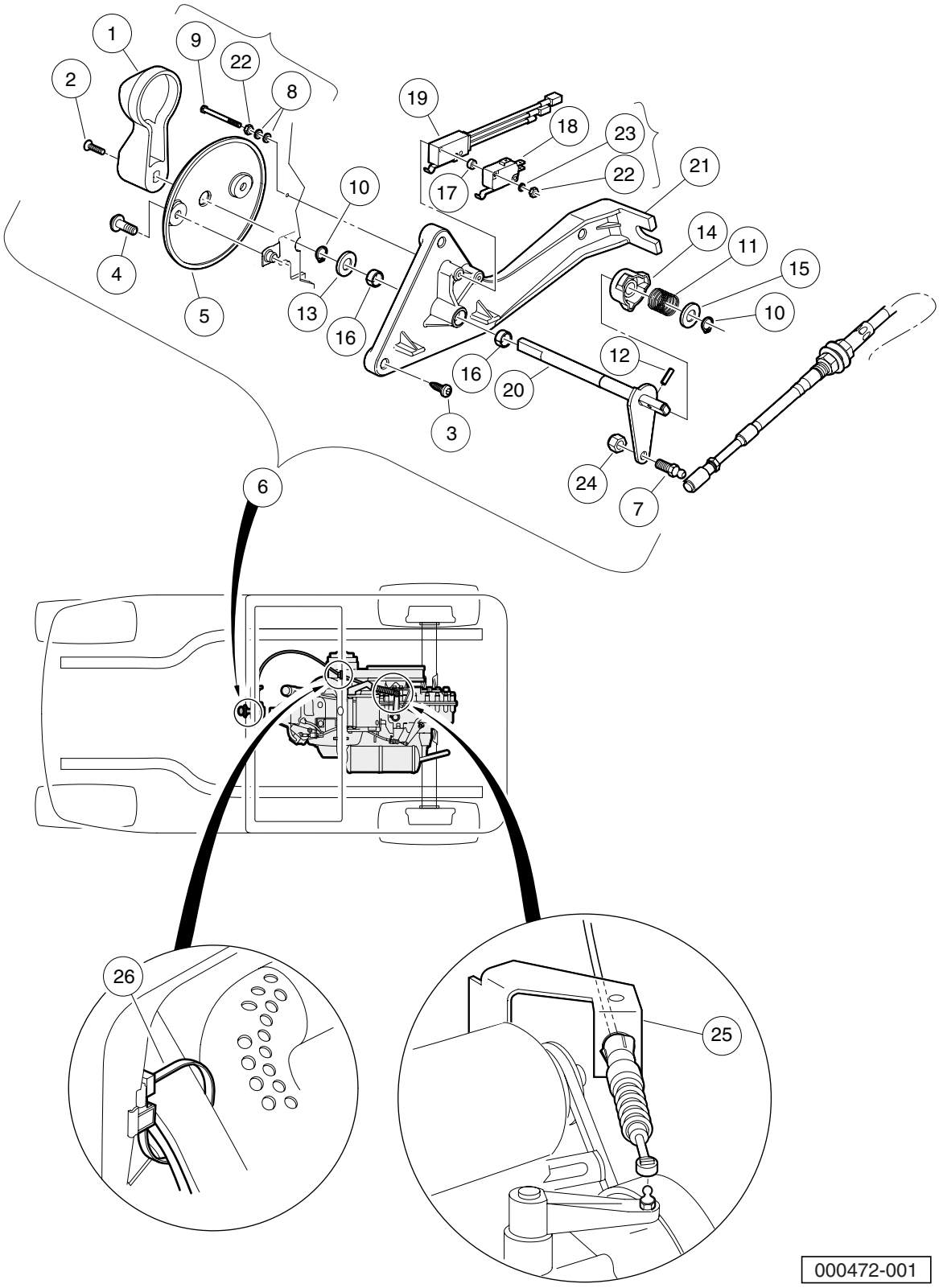
1
2
9
22
8
19
18
23
22
21
17
10
14
11
15
10
4
5
13
16
16
12
20
3
24
7
6
26
25
000472-001

FORWARD/REVERSE SHIFTER ASSEMBLY – GASOLINE VEHICLE

ITEM	PART NO.	DESCRIPTION	QTY
		1 2 3 4	
1	1012987	Handle, FNR	1
2	1015064	Screw, #8-32 X 0.63 Machine	1
3	102296040	Screw, Torx Pan Hd Pt, M6 X 40	3
4	102296920	Screw, M6 Torx Bttn Hd Sems	2
5	102512001	Bezel, FNR Gas	1
6	102514601	Assembly - Gas F-n-r Shifter (includes items 7 through 24)	1
7	1010954	Stud, 1/4-28 X 0.560 Ball	1
8	1012431	Washer, #4 Flat	4
9	1012594	Screw, #4-40 Machine	2
10	1013589	Ring, 0.338" Internal Retaining	2
11	1013590	Spring, FNR Cam	1
12	1013591	Pin, 1/8 X 1/2 Roll	1
13	1014065	Washer, 0.38" ID Delrin Flat	1
14	1014089	Neutral Lockout Cam Kit (includes item 15)	1
15	1014065	Washer, 0.38" ID Delrin Flat	1
16	1014145	Bushing, Secondary Weight, Split	2
17	1014727	Washer, #4 Nylon Flat	2
18	1014807	Switch, Limit	1
19	101979101	Assembly, Switch, Limit	1
20	102515301	Weldment, F-n-r Gas	1
21	102515601	Base, Gas FNR Shifter	1
22	8057	Nut, #4-40 Hex Machine	4
23	8058	Lockwasher, #4 Helical Split	2
24	8717	Locknut, 1/4-28 Nylon Insert	1
25	102515501	Bracket, Trans Cable Support	1
26	102554901	Clip,edge,trans Shift Cable	1

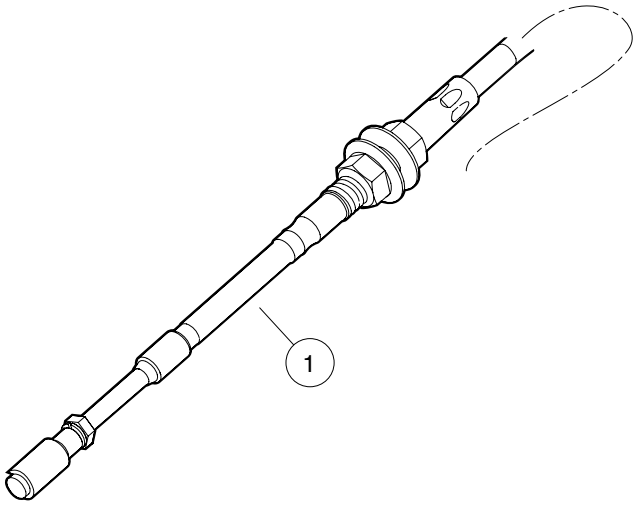

000473-001

TRANSMISSION CABLE

ITEM	PART NO.	DESCRIPTION	QTY
1	102589901	1 2 3 4 Cable, Transmission	1

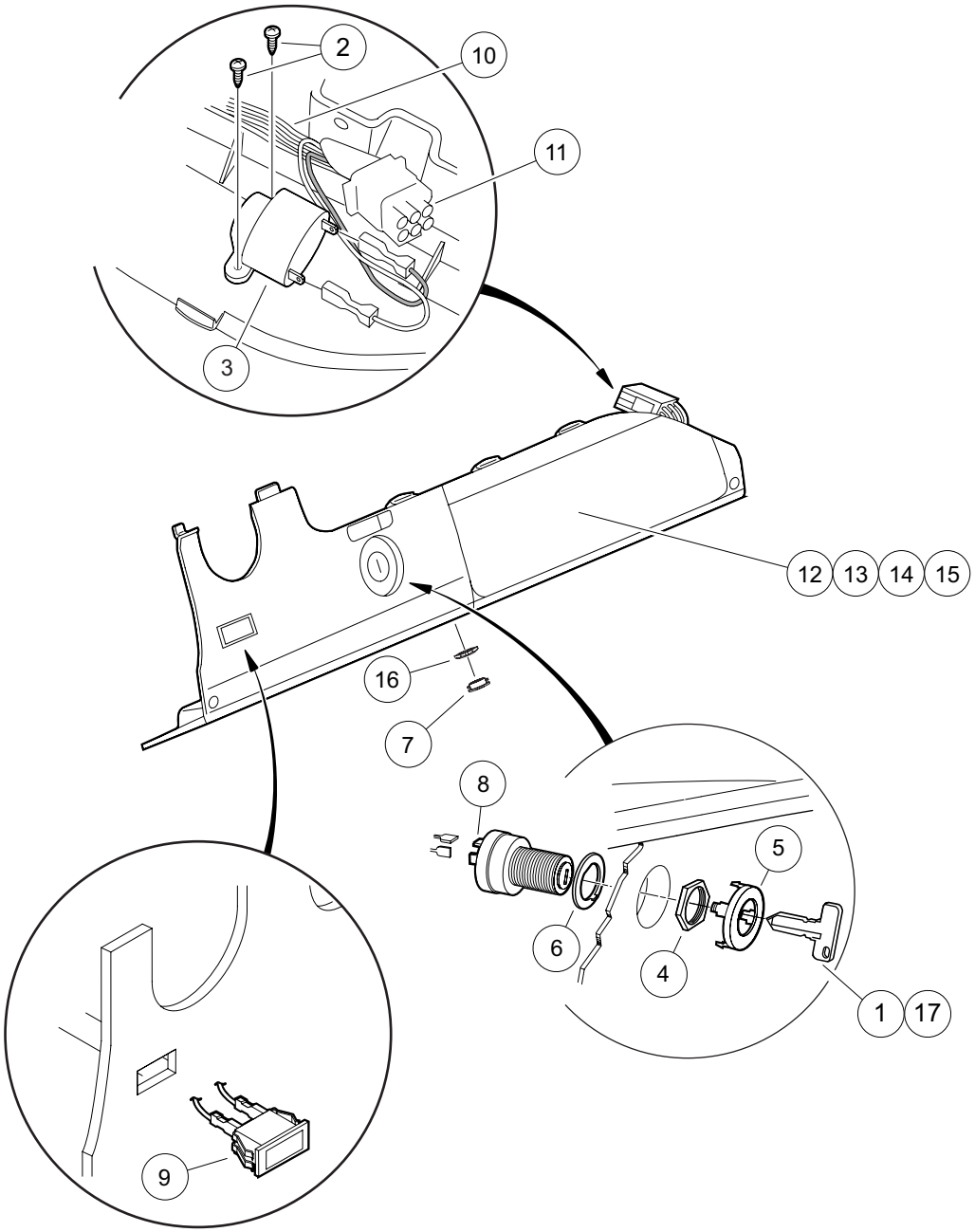

000490-001

ELECTRICAL COMPONENTS, FRONT BODY – ELECTRIC VEHICLE

ITEM	PART NO.	DESCRIPTION	QTY
		1 2 3 4	
1	1012505	Keys (set of 2)	1
2	1016849	Screw, #4-24 X 0.33 Pan-Head Machine	2
3	1016851	Buzzer, Reverse (9-48 VDC)	1
4	101830701	Nut, Key Switch	1
5	101834502	Cap, Black Key Switch	1
6	101851101	Washer, Key Switch	1
7	102196901	Dust Cap	1
8	102508601	Key Switch, Electric	1
9	102508701	Light, Battery	1
10	102510001	Ip Control Harness, Elec (includes item 11)	1
11	102223401	Connector, Cap 9-pin	1
12	102522901	Instrument Panel (standard)	1
13	102536601	Instrument Panel (with Hole for Headlight Switch)	1
14	102536603	Instrument Panel (with Hole for Battery Condition Indicator)	1
15	102536605	Instrument Panel (with Hole for Headlight Switch and Battery Condition Indicator)	1
16	102572401	Nut, Diagnostic Port, Prec	1
17	AM10079	Bulk Std Keys (50) *	1

* Note: Must order in multiples of 50.

IQ SYSTEM VEHICLE - STYLE A BATTERY CONFIGURATION

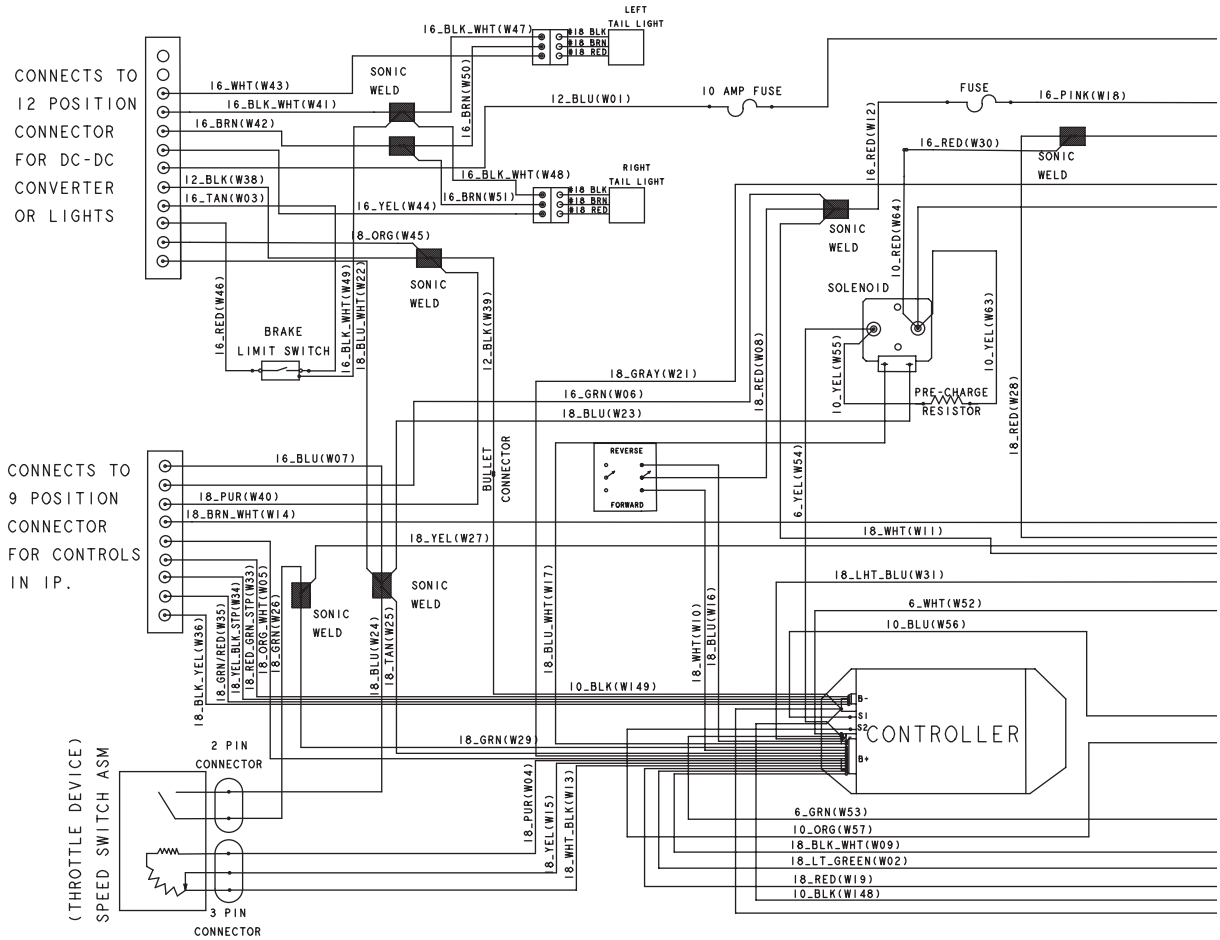

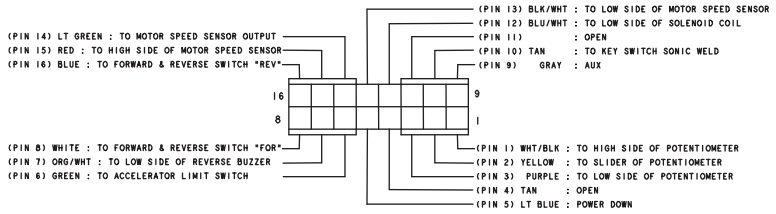

16 - PIN CONNECTOR AT CONTROLLER

000498-001

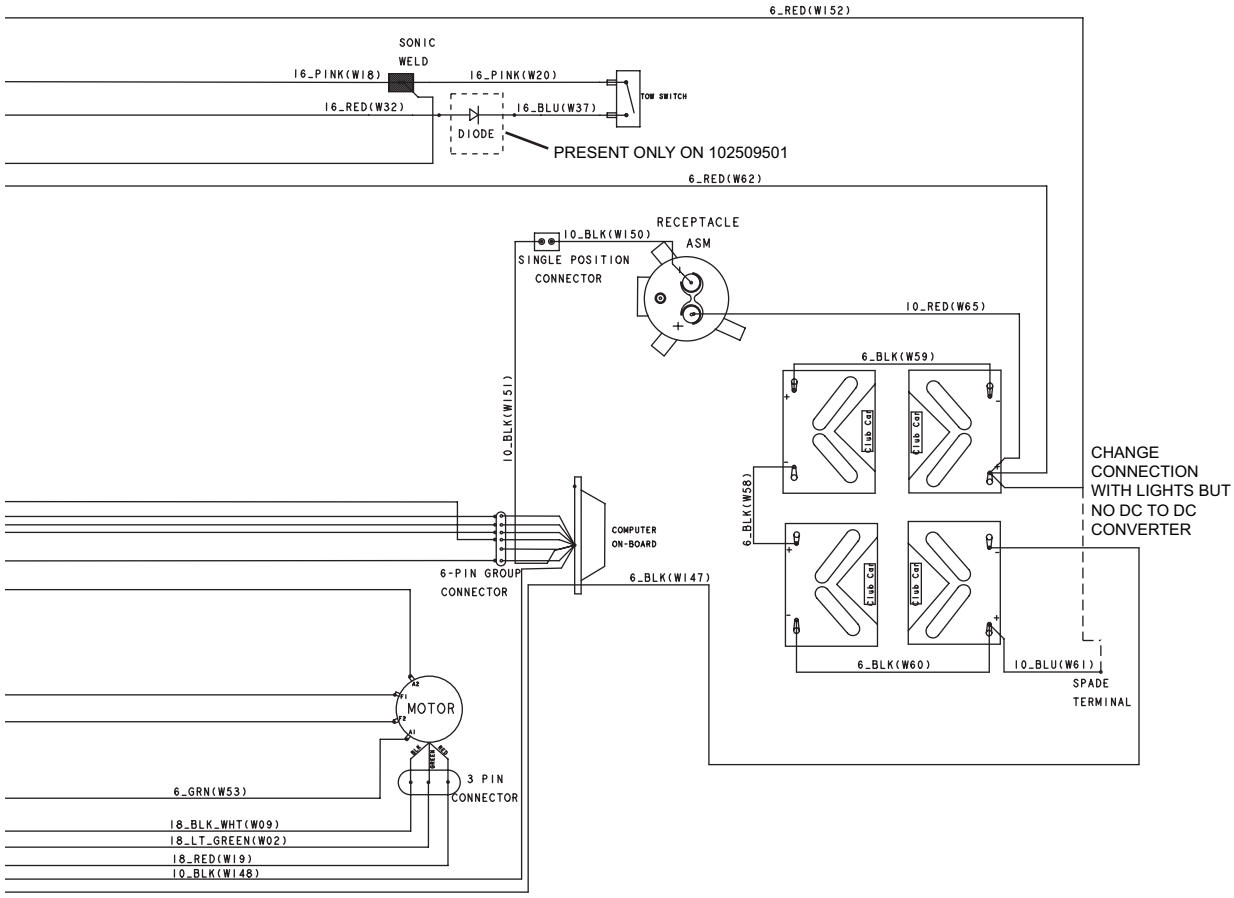

NOTE:
SOME WIRING / COMPONENTS SHOWN
ARE OPTIONAL ACCESSORIES

000498-001

See previous two pages for illustration.

WIRING – IQ SYSTEM WITH STYLE A BATTERY CONFIGURATION

ITEM	PART NO.	DESCRIPTION	QTY
		1 2 3 4	
1	102510101	Motor Sub-harness	1
2	102550301	Sub Harness Charger, Prec	1
3	102585801	Prec Elec Harness For 1510a	1
4	102590001	Prec Ce Tow-switch Diode	1
		Note: Item 4 is used on vehicles going to the European Union.	

IQ SYSTEM VEHICLE - STYLE B AND STYLE C BATTERY CONFIGURATIONS

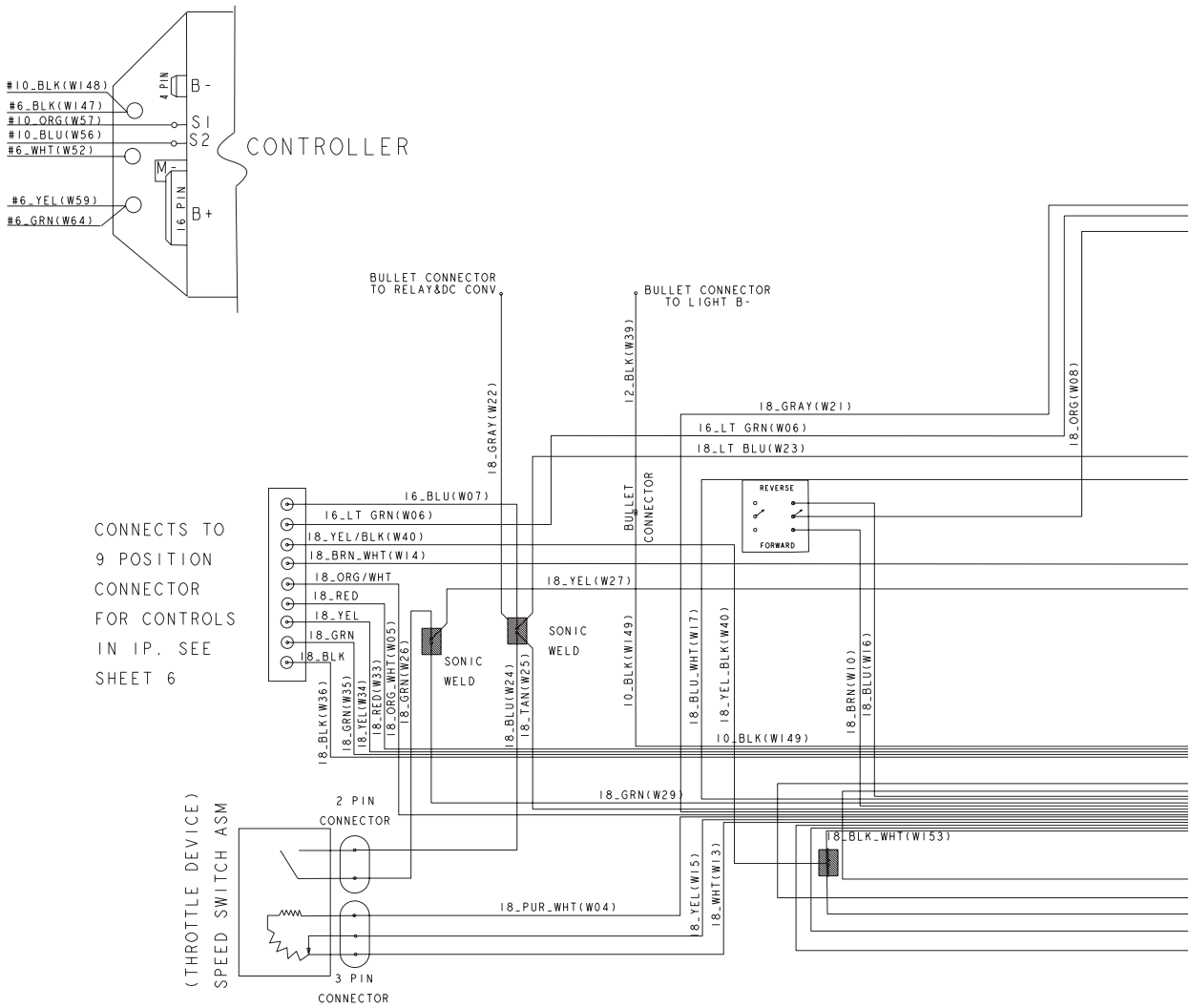

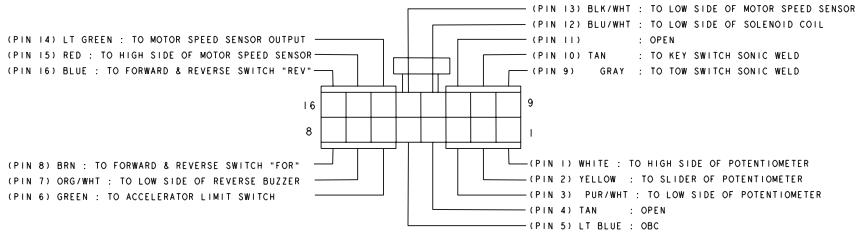

16 - PIN CONNECTOR AT CONTROLLER

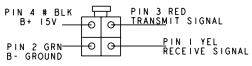

REAR VIEW
4 PIN CONNECTOR AT CONTROLLER
COMMUNICATION PORT

000498-002

NOTE:
SOME WIRING / COMPONENTS SHOWN
ARE OPTIONAL ACCESSORIES

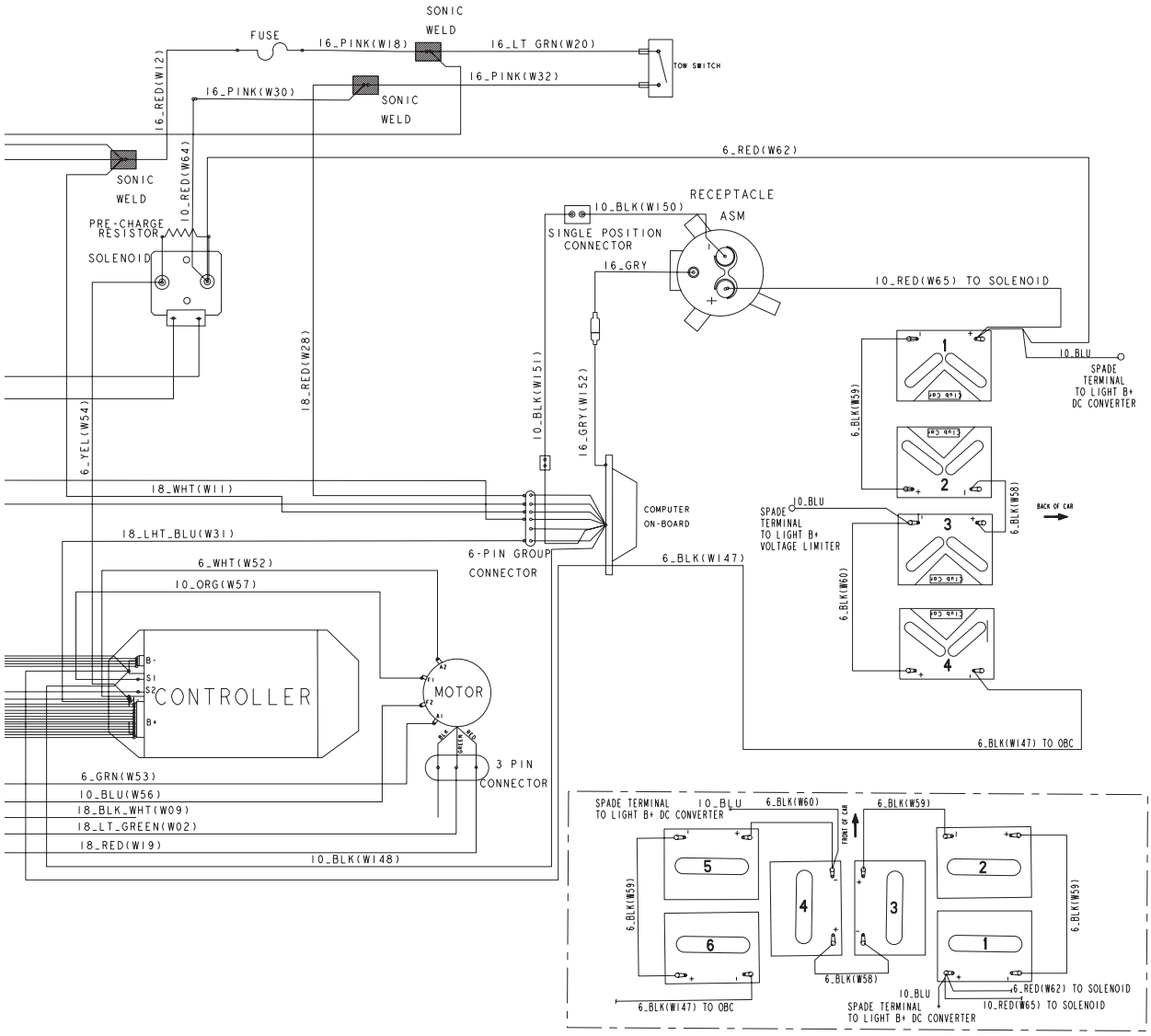

000498-002

See previous two pages for illustration.

WIRING – IQ SYSTEM WITH STYLES B OR C BATTERY CONFIGURATION

ITEM	PART NO.	DESCRIPTION	QTY
		1 2 3 4	
1	102590001	Prec Ce Tow-switch Diode	1
2	103374901	Wire Harness, Prec/restyle	1
3	103375701	Asm. Harness, Motor	1
4	103421801	Asm Harness Charger, Prec	1
		Note: Item 1 is used on vehicles going to the European Union.	

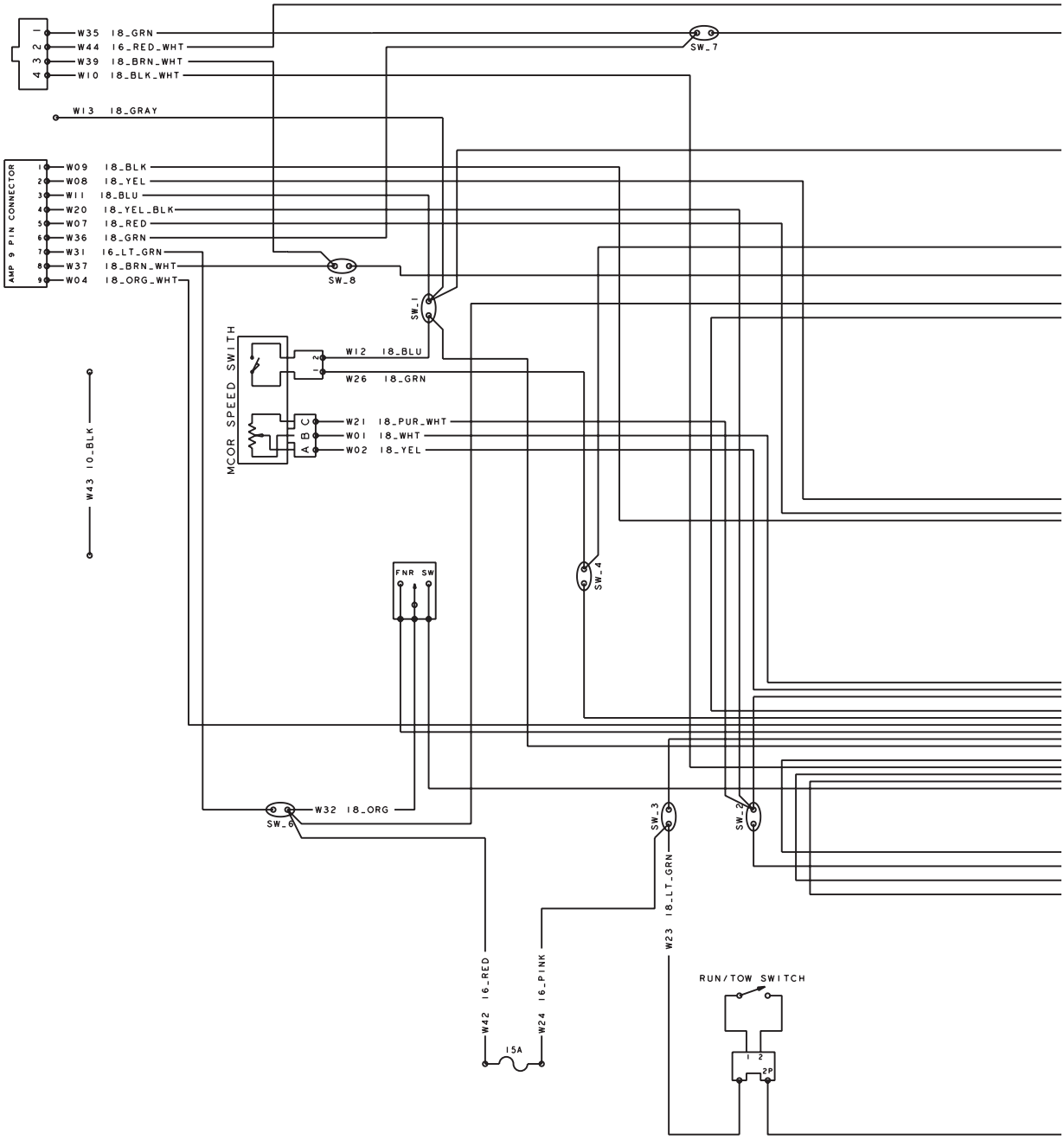
AMP 9 PIN CONNECTOR
W35 18_GRN
W44 16_RED_WHT
W39 18_BRN_WHT
W10 18_BLK_WHT
W13 18_GRAY
W09 18_BLK
W08 18_YEL
W11 18_BLU
W20 18_YEL_BLK
W07 18_RED
W36 18_GRN
W31 16_LT_GRN
W37 18_BRN_WHT
W04 18_ORG_WHT
SW_7
SW_8
SW_1
MCOR SPEED SWITH
W12 18_BLU
W26 18_GRN
W21 18_PUR_WHT
W01 18_WHT
W02 18_YEL
W43 10_BLK
FNR SW
SW_4
W32 18_ORG
SW_6
SW_3
SW_2
W23 18_LT_GRN
W42 16_RED
W24 16_PINK
15A
RUN/TOW SWITCH
2P

000498-003

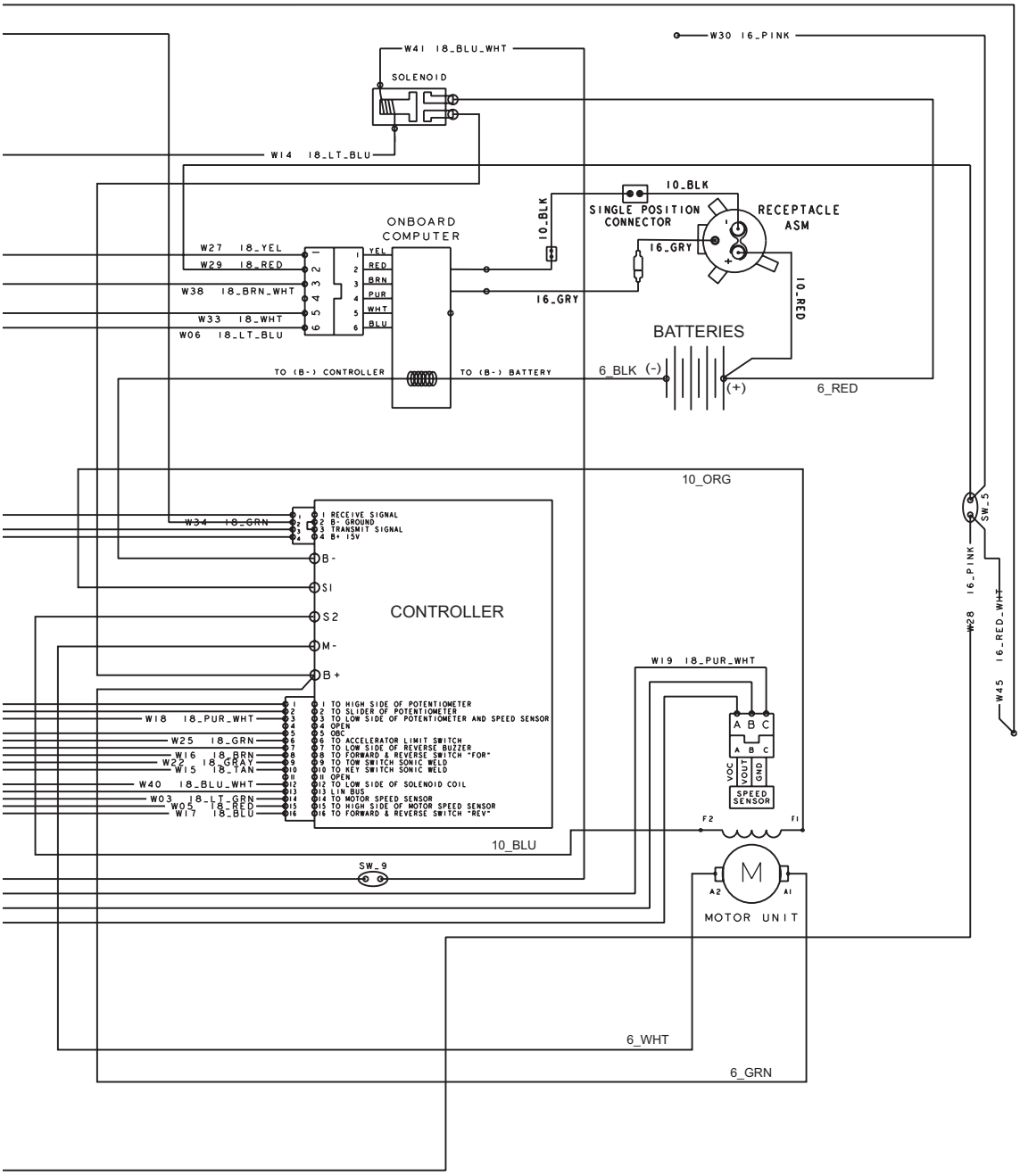
W30 16_PINK
W41 18_BLU_WHT
SOLENOID
W14 18_LT_BLU
10_BLK
SINGLE POSITION CONNECTOR
RECEPTACLE ASM
ONBOARD COMPUTER
10_BLK
16_GRY
W27 18_YEL
W29 18_RED
W38 18_BRN_WHT
W33 18_WHT
W06 18_LT_BLU
YEL
RED
BRN
PUR
WHT
BLU
16_GRY
10_RED
BATTERIES
TO (B-) CONTROLLER
TO (B-) BATTERY
6_BLK (-)
(+)
6_RED
10_ORG
W34 18_GRN
1 RECEIVE SIGNAL
2 B- GROUND
3 TRANSMIT SIGNAL
4 B+ 15V
B-
S1
S2
M-
B+
CONTROLLER
1 TO HIGH SIDE OF POTENTIOMETER
2 TO SLIDER OF POTENTIOMETER
3 TO LOW SIDE OF POTENTIOMETER AND SPEED SENSOR
4 OPEN
5 OBC
6 TO ACCELERATOR LIMIT SWITCH
7 TO LOW SIDE OF REVERSE BUZZER
8 TO FORWARD & REVERSE SWITCH "FOR"
9 TO TOW SWITCH SONIC WELD
10 TO KEY SWITCH SONIC WELD
11 OPEN
12 TO LOW SIDE OF SOLENOID COIL
13 LIN BUS
14 TO MOTOR SPEED SENSOR
15 TO HIGH SIDE OF MOTOR SPEED SENSOR
16 TO FORWARD & REVERSE SWITCH "REV"
W18 18_PUR_WHT
W25 18_GRN
W16 18_BRN
W22 18_GRAY
W15 18_TAN
W40 18_BLU_WHT
W03 18_LT_GRN
W05 18_RED
W17 18_BLU
W19 18_PUR_WHT
A B C
VCC
VOUT
GND
SPEED SENSOR
F2
F1
10_BLU
SW_9
M
A2
A1
MOTOR UNIT
6_WHT
6_GRN
SW_5
W28 16_PINK
W45 16_RED_WHT

000498-003

See previous two pages for illustration.

WIRING – EXCEL SYSTEM WITH STYLE B OR C BATTERY CONFIGURATION

ITEM	PART NO.	DESCRIPTION	QTY
		1 2 3 4	
1	102590001	Prec Ce Tow-switch Diode	1
2	103375701	Asm. Harness, Motor	1
3	103403501	Harness, Main, Excel	1
4	103421801	Asm Harness Charger, Prec	1
		Note: Item 1 is used on vehicles going to the European Union.	

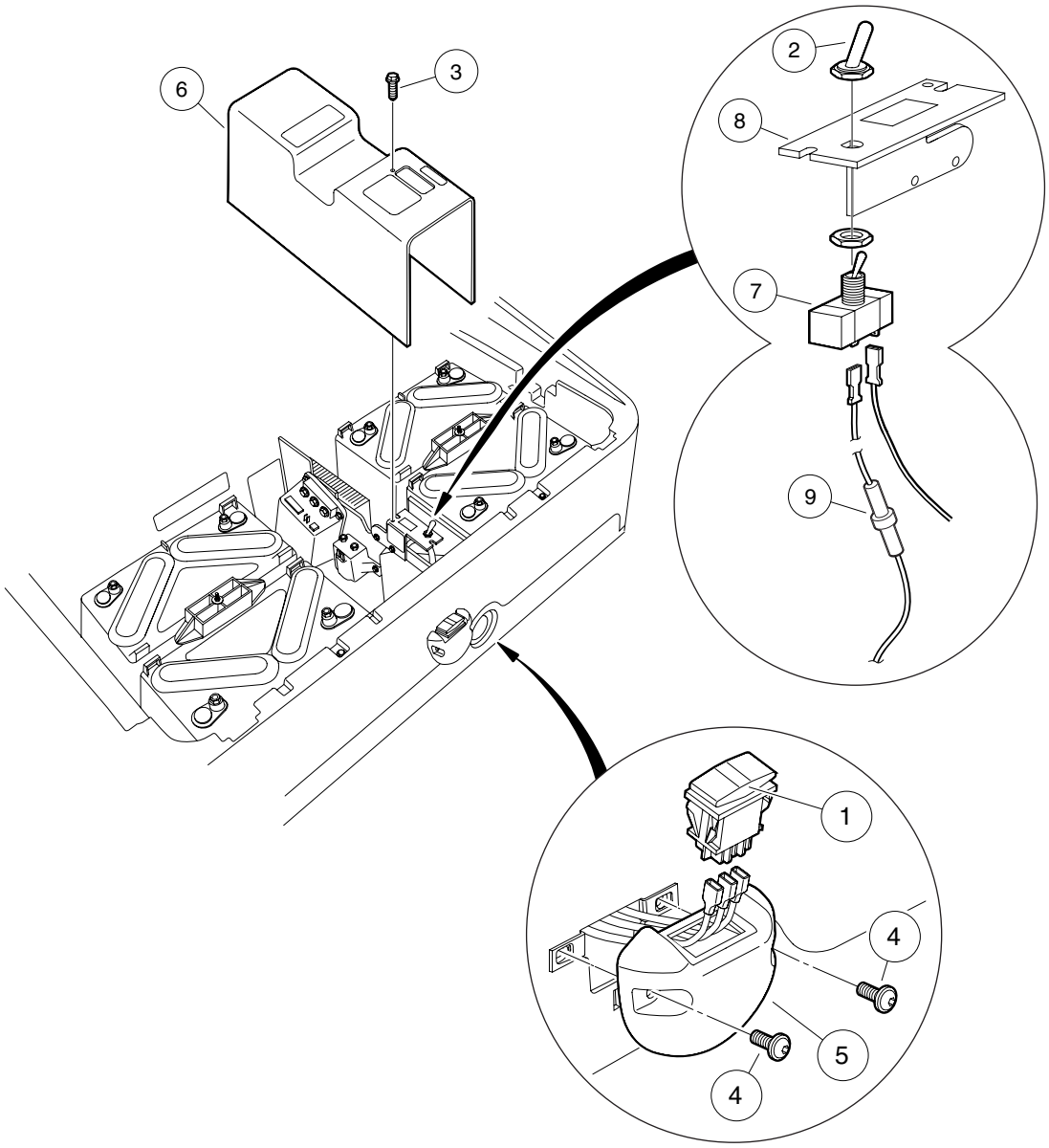

000462-003

FORWARD/REVERSE SWITCH AND TOW/RUN SWITCH – ELECTRIC VEHICLE, STYLE A

ITEM	PART NO.	DESCRIPTION	QTY
		1 2 3 4	
1	101856001	Switch, Rocker, Double-Pole	1
2	101908401	Boot, Switch	1
3	102296716	Screw, M6 X 16 Tt Hx Fl Hd	1
4	102296920	Screw, M6 Torx Bttn Hd Sems	2
5	102508401	Housing, FNR Electric	1
6	102510901	Cover, Electronics Module	1
7	102511101	Switch, Tow	1
8	102520001	Hour Meter/tow Switch Bkt	1
9	102538601	15 Amp Fuse	1

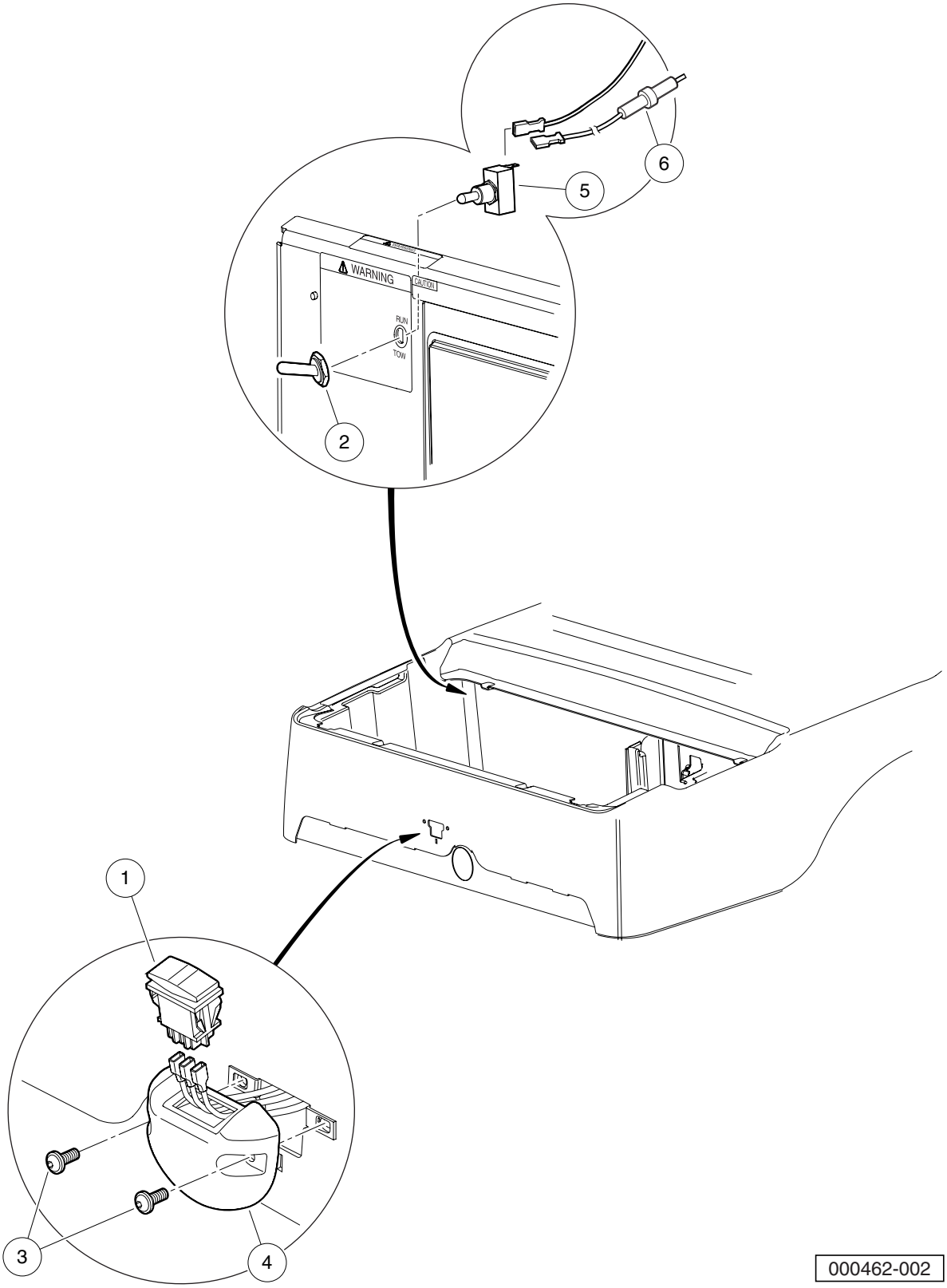
6
5
WARNING
CAUTION
RUN
TOW
2
1
3
4
000462-002

FORWARD/REVERSE SWITCH AND TOW/RUN SWITCH – ELECTRIC VEHICLE, STYLES B AND C

ITEM	PART NO.	DESCRIPTION	QTY
		1 2 3 4	
1	101856001	Switch, Rocker, Double-Pole	1
2	101908401	Boot, Switch	1
3	102296920	Screw, M6 Torx Bttn Hd Sems	2
4	102508401	Housing, FNR Electric	1
5	102511101	Switch, Tow	1
6	102538601	15 Amp Fuse	1

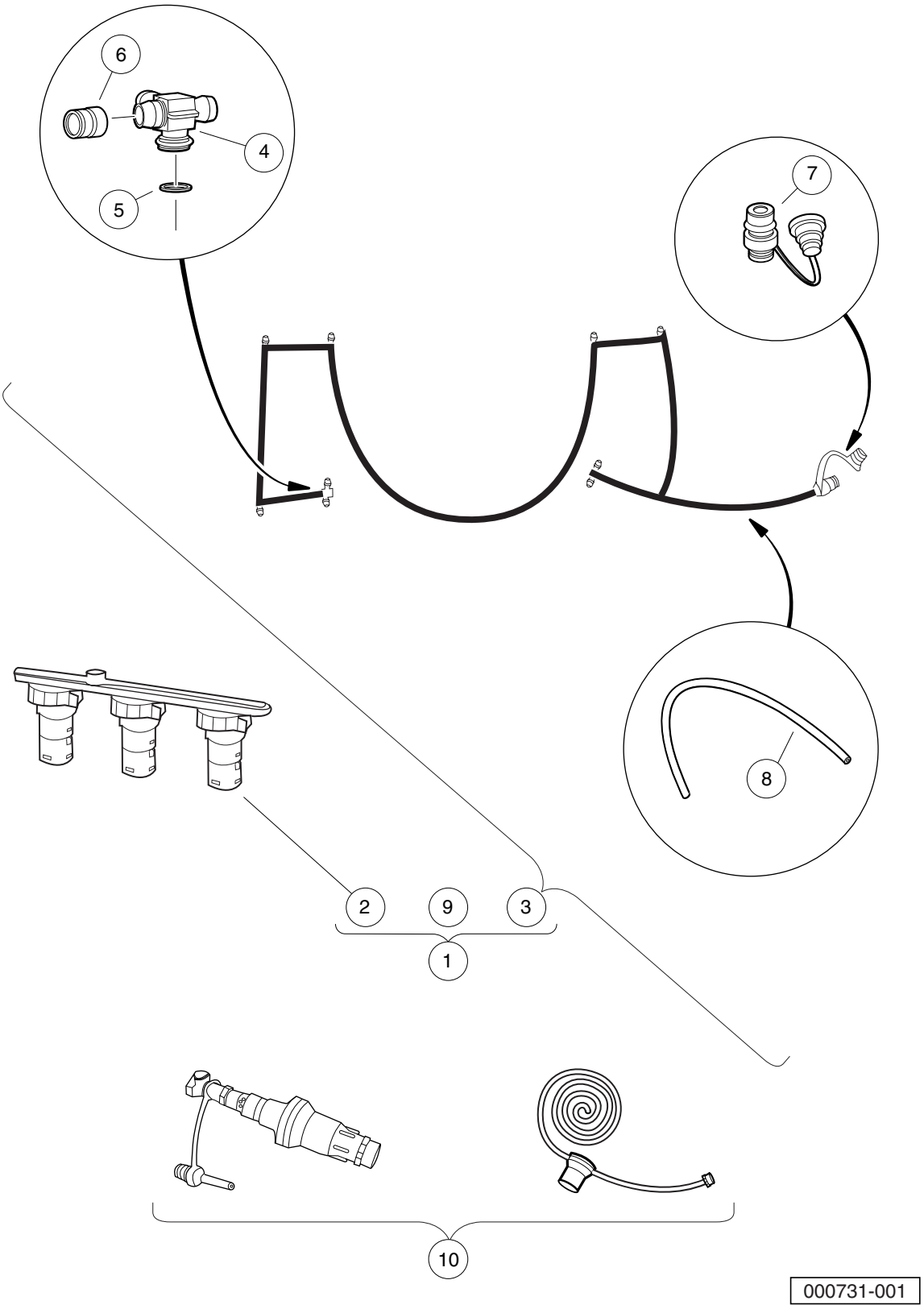
6
4
5
7
8
2
9
3
1
10
000731-001

SINGLE POINT WATERING SYSTEM, STYLE A

ITEM	PART NO.	DESCRIPTION	QTY
		1 2 3 4	
1	102956301	Kit Spws Prec Fr (includes items 2 through 9)	1
2	102956401	Manifold, SPWS (Single-Point Watering System)	8
3	102956501	Assy Tube Single-Point Watering System, Precedent (includes items 4 through 8)	1
4	103226201	Fitting Spws Swivel T	8
5	103226301	O-ring Spws Swivel T	8
6	103226401	Cap Spws Swivel T Red	9
7	103226601	Coupler Male Spws Supply	1
8	103226701	Tubing Spws Bulk Roll	1
9	102989101	Instr Spws Kit Prec Ds Fr	1
10	102958001	Kit Regulated Hose Sply Spws	1

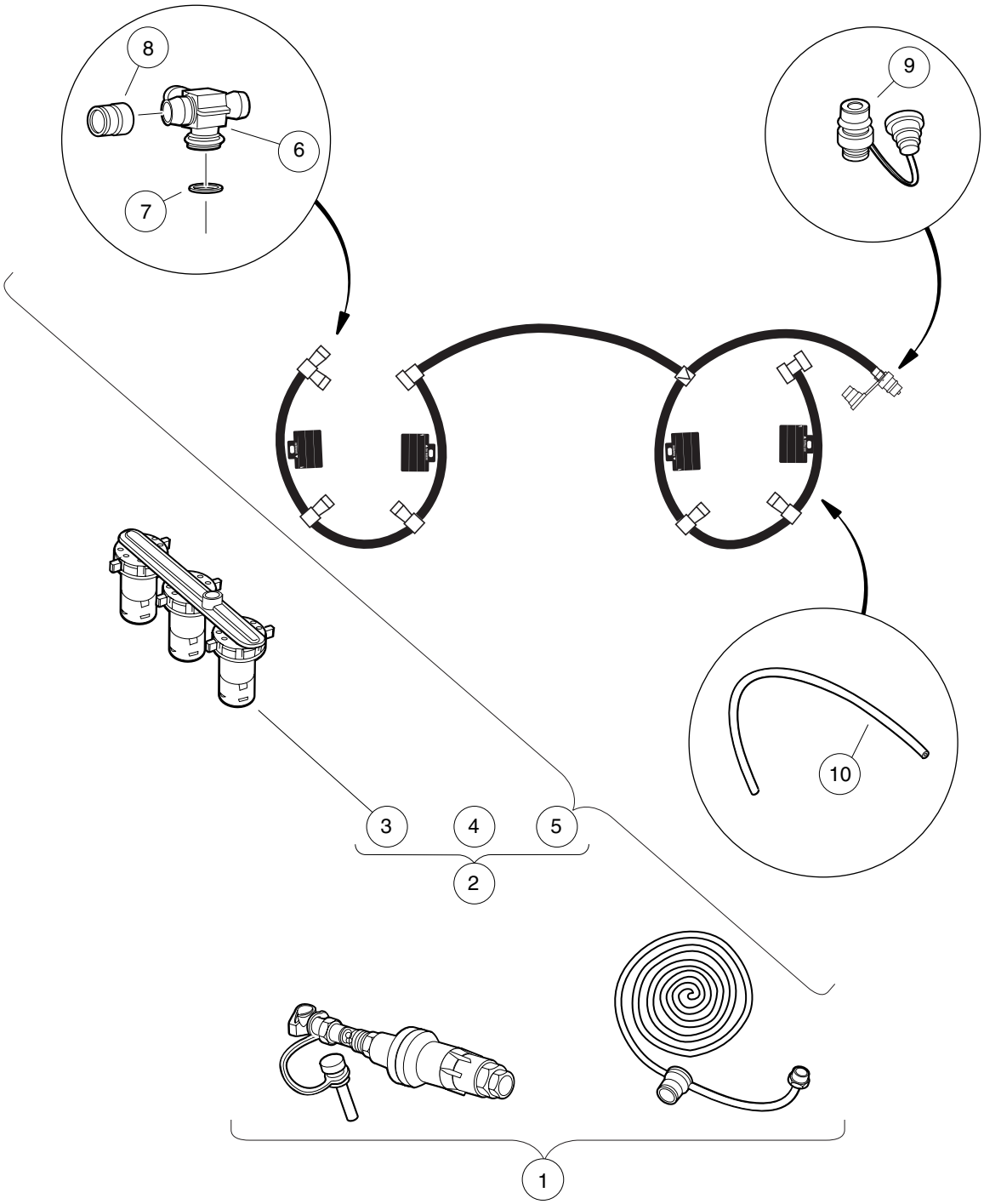

000731-002

SINGLE POINT WATERING SYSTEM, STYLE B

ITEM	PART NO.	DESCRIPTION	QTY
		1 2 3 4	
1	102958001	Kit Regulated Hose Sply Spws	1
2	103395503	Kit, Spws F/r, Prec/res, 12v (includes items 3 through 5)	1
3	102956401	Manifold, SPWS (Single-Point Watering System)	8
4	102989101	Instr Spws Kit Prec Ds Fr	1
5	103395402	Asm Tube Spws Prec/res, 12v (includes items 6 through 10)	1
6	103226201	Fitting Spws Swivel T	8
7	103226301	O-ring Spws Swivel T	8
8	103226401	Cap Spws Swivel T Red	9
9	103226601	Coupler Male Spws Supply	1
10	103226701	Tubing Spws Bulk Roll	A/R

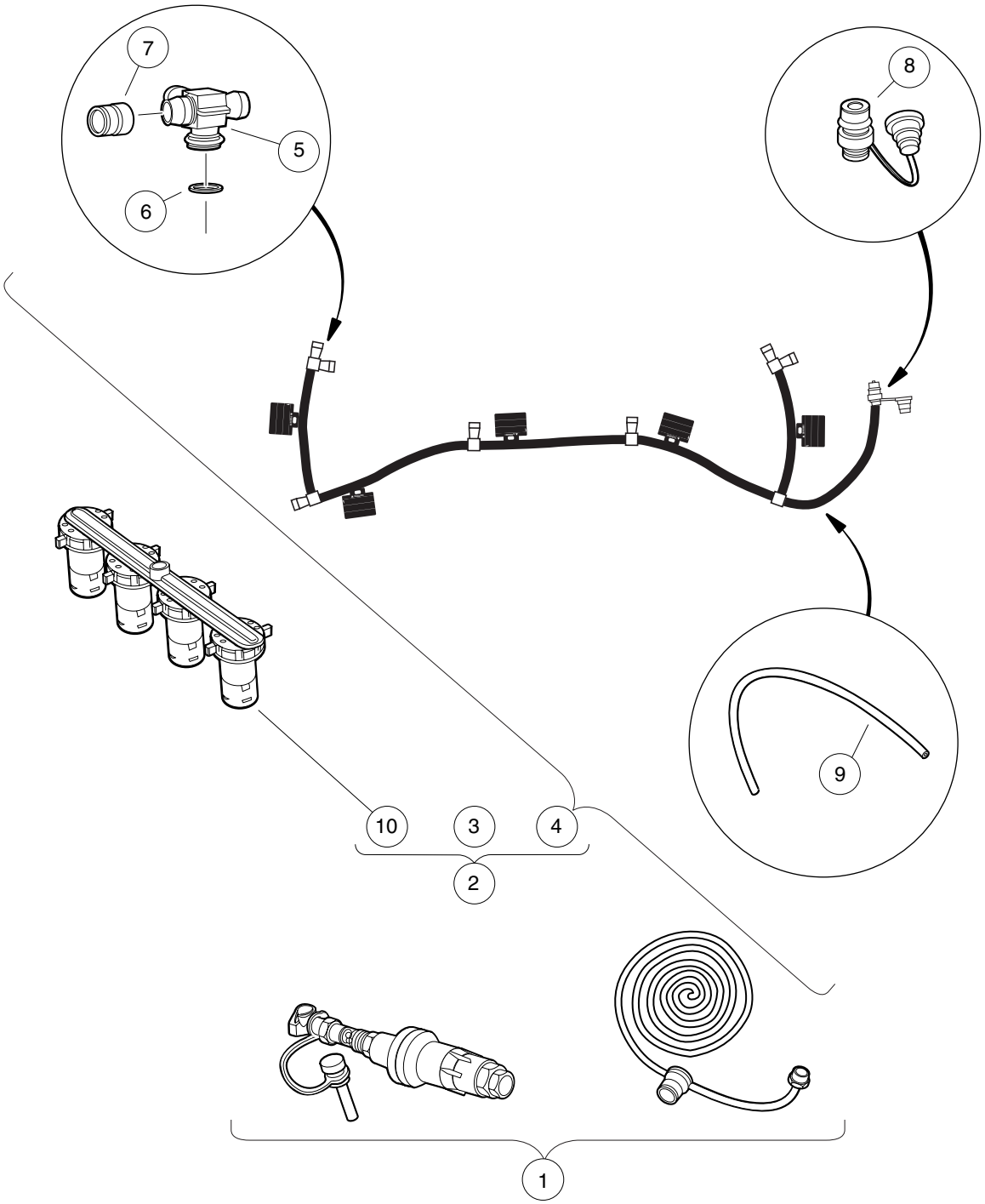

000731-003

SINGLE POINT WATERING SYSTEM, STYLE C

ITEM	PART NO.	DESCRIPTION	QTY
		1 2 3 4	
1	102958001	Kit Regulated Hose Sply Spws	1
2	103395501	Kit, Spws F/r, Prec/res, 8v (includes items 3 through 10)	1
3	102989101	Instr Spws Kit Prec Ds Fr	1
4	103395401	Asm Tube Spws Prec/res, 8v (includes items 5 through 9)	1
5	103226201	Fitting Spws Swivel T	6
6	103226301	O-ring Spws Swivel T	6
7	103226401	Cap Spws Swivel T Red	7
8	103226601	Coupler Male Spws Supply	1
9	103226701	Tubing Spws Bulk Roll	A/R
10	103395701	Manifold, 4 Valve Spw	6

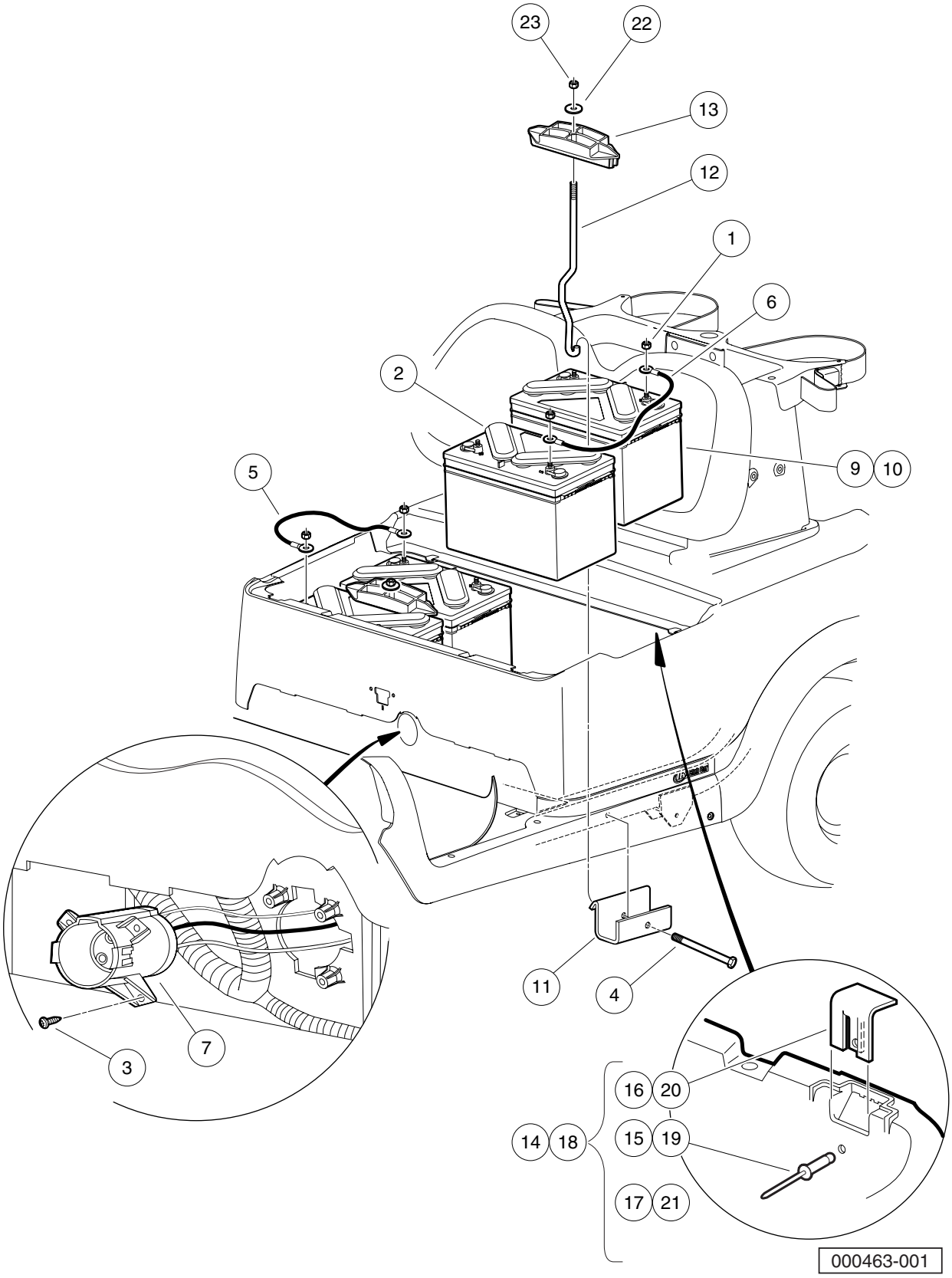
23
22
13
12
1
6
2
9
10
5
11
4
7
3
16
20
14
18
15
19
17
21
000463-001

BATTERIES, BUCKET, AND CHARGER RECEPTACLE – IQ SYSTEM, STYLE A

ITEM	PART NO.	DESCRIPTION	QTY
		1 2 3 4	
1	1014304	Nut, 5/16-18 Stainless-Steel Hex	8
2	101831401	Battery Cap 6 Volt	8
3	102293512	Screw-k35 Torx Pan Head Pt	3
4	102298770	M8-1.25x70 Taptite	2
5	102509701	Cable - Ev Passenger Jumper	1
6	102509801	Cable - Ev Rear Jumper	2
7	102510201	Receptacle Asm	1
8	102510601	Bucket-Electric Vehicle (not shown)	1
9	102511301	Battery, Ventmaster 12-Volt (Wet)	4
10	102511302	Battery, Ventmaster 12-Volt (Dry, also known as moist)	4
11	102526401	Support - Battery Clamp	2
12	102526801	Rod - Battery Clamp	2
13	102534001	Clamp - Battery	2
14	102577001	Kit, Bucket Closeout (includes items 15 through 17)	1
15	1013357	Rivet, 5/32 Aluminum Pop	2
16	N/A	Bracket, Bucket Closeout	2
17	N/A	Instr. Bucket Closeout	1
18	102577002	Kit, Bucket Closeout - 10 Sets (includes items 19 through 21)	1
19	1013357	Rivet, 5/32 Aluminum Pop	20
20	N/A	Bracket, Bucket Closeout	20
21	N/A	Instr. Bucket Closeout	1
22	808	Washer, 3/8 Type B Flat	2
23	8754	Locknut, 3/8-16 Hex	2

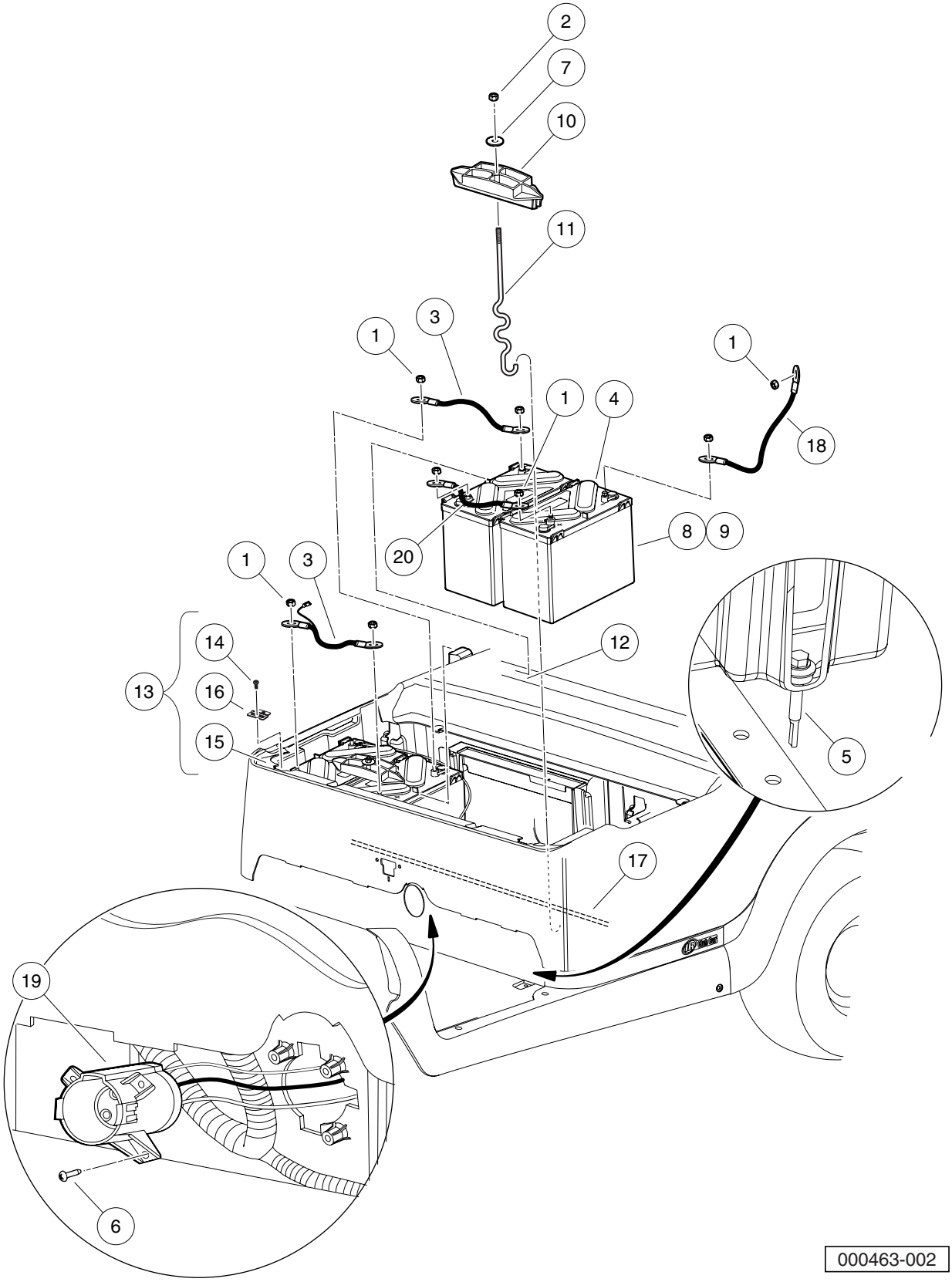
2
7
10
11
1
3
1
1
4
18
20
8
9
1
3
14
13
16
15
12
5
17
19
6
000463-002

BATTERIES, BUCKET, AND CHARGER RECEPTACLE – IQ AND EXCEL SYSTEMS, STYLE B

ITEM	PART NO.	DESCRIPTION	QTY
		1 2 3 4	
1	1014304	Nut, 5/16-18 Stainless-Steel Hex	8
2	1014555	Locknut, 7/16-14 Nylon Insert	2
3	101795701	Asm, Wire, #6blk 13in	2
4	101831401	Battery Cap 6 Volt	8
5	101832001	Screw, #7-19 X 0.625 Phillips Pan-Head Tap	3
6	102292356	Screw-1/4-20x56 Hwh Self Drill	4
7	102491501	Washer Hard,m10	2
8	102511301	Battery, Ventmaster 12-Volt (Wet)	4
9	102511302	Battery, Ventmaster 12-Volt (Dry, also known as moist)	4
10	102534001	Clamp - Battery	2
11	103357701	Bolt, Battery, "s" Hold-down	2
12	103358501	Separator, Battery, 12 Volt	1
13	103368401	Asm, Bucket, Batt, Elec, Prec (includes items 14 through 16)	1
14	102298020	Screw, K80x20, Torx Pn Hd Pt	2
15	N/A	Bucket, Batt, Elec, Precedent	1
16	103368301	Hinge, Nested	2
17	103375301	Tube, Cross, Battery Rod	1
18	103375401	Asm, Ev Battery Positive	1
19	103375501	Asm, Prec Restyle Receptacle	1
20	103376001	Wire Asm #6 Blk, Prec/restyle	1

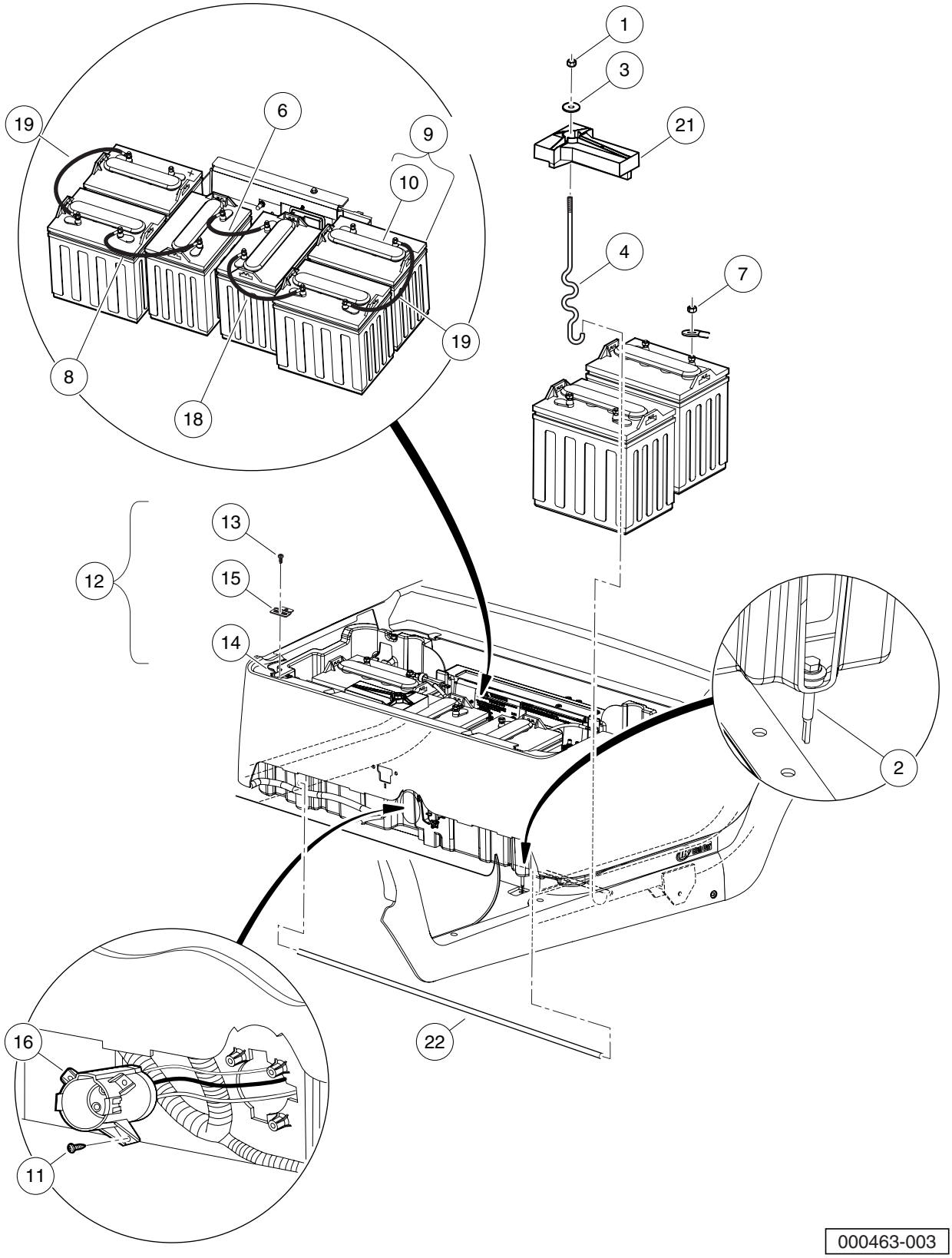
1
3
21
4
7
19
6
9
10
19
8
18
13
12
15
14
2
16
22
11
000463-003

BATTERIES, BUCKET, AND CHARGER RECEPTACLE – IQ AND EXCEL SYSTEMS, STYLE C

ITEM	PART NO.	DESCRIPTION	QTY
		1 2 3 4	
1	1014555	Locknut, 7/16-14 Nylon Insert	2
2	102292356	Screw-1/4-20x56 Hwh Self Drill	4
3	102491501	Washer Hard,m10	2
4	103357701	Bolt, Battery, "s" Hold-down	2
5	N/A	Bucket Asm - 8v (includes items 6 through 20)	1
6	1010958	Asm, Wire, #6blk 8in	1
7	1014304	Nut, 5/16-18 Stainless-Steel Hex	12
8	101795701	Asm, Wire, #6blk 13in	1
9	101797701	Battery, 8-Volt, T875 (includes item 10)	6
10	101797801	Cap, 4-Gang Battery	1
11	101832001	Screw, #7-19 X 0.625 Phillips Pan-Head Tap	3
12	103368401	Asm, Bucket, Batt, Elec, Prec (includes items 13 through 15)	1
13	102298020	Screw, K80x20, Torx Pn Hd Pt	2
14	N/A	Bucket, Batt, Elec, Precedent	1
15	103368301	Hinge, Nested	2
16	103375501	Asm, Prec Restyle Receptacle	1
17	N/A	Asm, Elect Module, Prec/res	1
18	103376001	Wire Asm #6 Blk, Prec/restyle	1
19	103413901	Wire Asm, #6 Blk #21	2
20	8639	Tie Wrap, 11" Nylon	2
21	103374801	Hold Down, Battery	2
22	103375301	Tube, Cross, Battery Rod	1

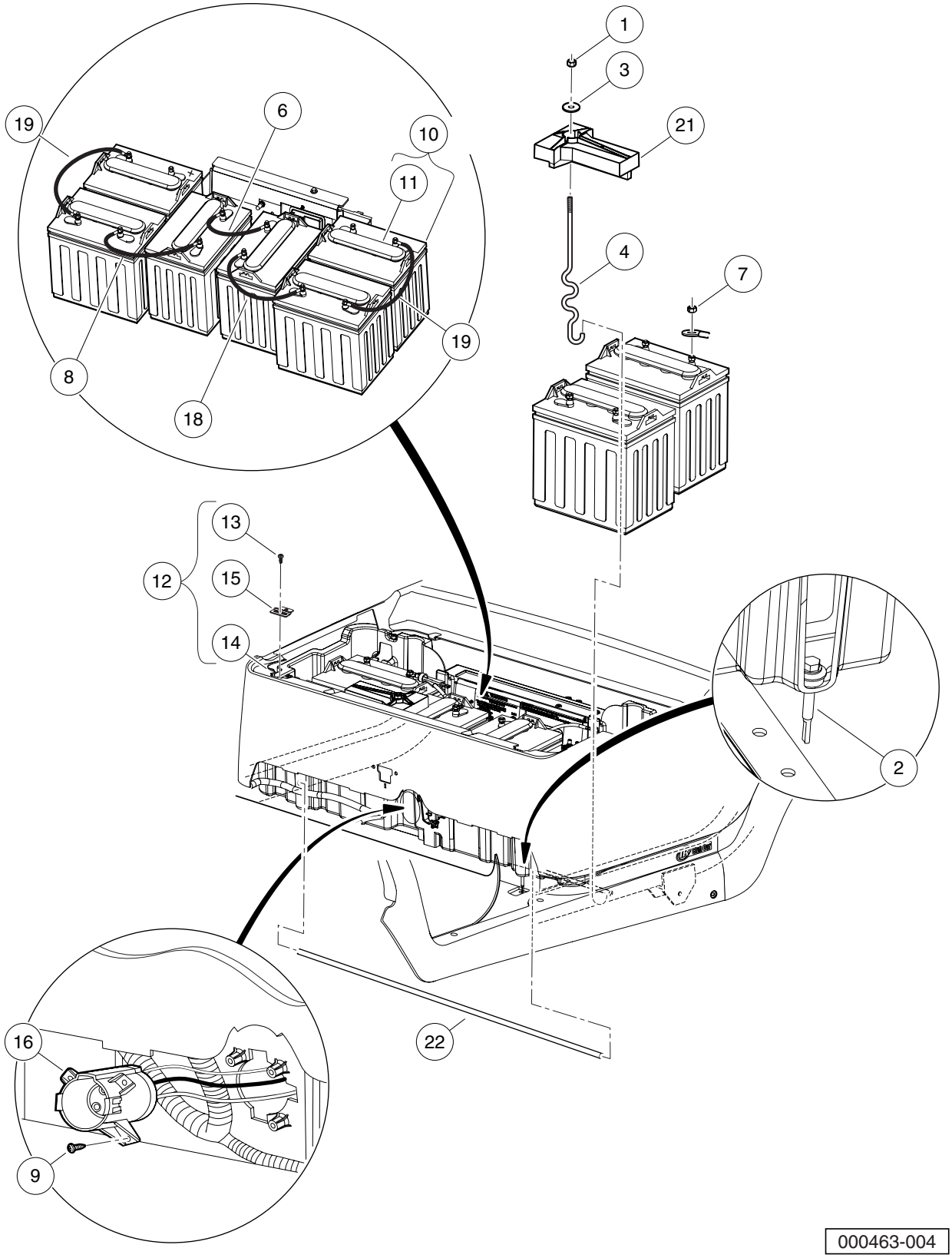
1
3
21
4
7
19
6
10
11
19
8
18
13
12
15
14
2
16
22
9
000463-004

BATTERIES, BUCKET, AND CHARGER RECEPTACLE – IQ AND EXCEL SYSTEMS, HEAVY DUTY, STYLE C

ITEM	PART NO.	DESCRIPTION	QTY
		1 2 3 4	
1	1014555	Locknut, 7/16-14 Nylon Insert	2
2	102292356	Screw-1/4-20x56 Hwh Self Drill	4
3	102491501	Washer Hard,m10	2
4	103357701	Bolt, Battery, "s" Hold-down	2
5	N/A	Bucket Asm - 8v, Hd (includes items 6 through 20)	1
6	1010958	Asm, Wire, #6blk 8in	1
7	1014304	Nut, 5/16-18 Stainless-Steel Hex	12
8	101795701	Asm, Wire, #6blk 13in	1
9	101832001	Screw, #7-19 X 0.625 Phillips Pan-Head Tap	3
10	101964201	Battery, 8v Trojan T890 (Wet) (includes item 11)	6
11	101797801	Cap, 4-Gang Battery	1
12	103368401	Asm, Bucket, Batt, Elec, Prec (includes items 13 through 15)	1
13	102298020	Screw, K80x20, Torx Pn Hd Pt	2
14	N/A	Bucket, Batt, Elec, Precedent	1
15	103368301	Hinge, Nested	2
16	103375501	Asm, Prec Restyle Receptacle	1
17	N/A	Asm, Elect Module, Prec/res	1
18	103376001	Wire Asm #6 Blk, Prec/restyle	1
19	103413901	Wire Asm, #6 Blk #21	2
20	8639	Tie Wrap, 11" Nylon	2
21	103374801	Hold Down, Battery	2
22	103375301	Tube, Cross, Battery Rod	1

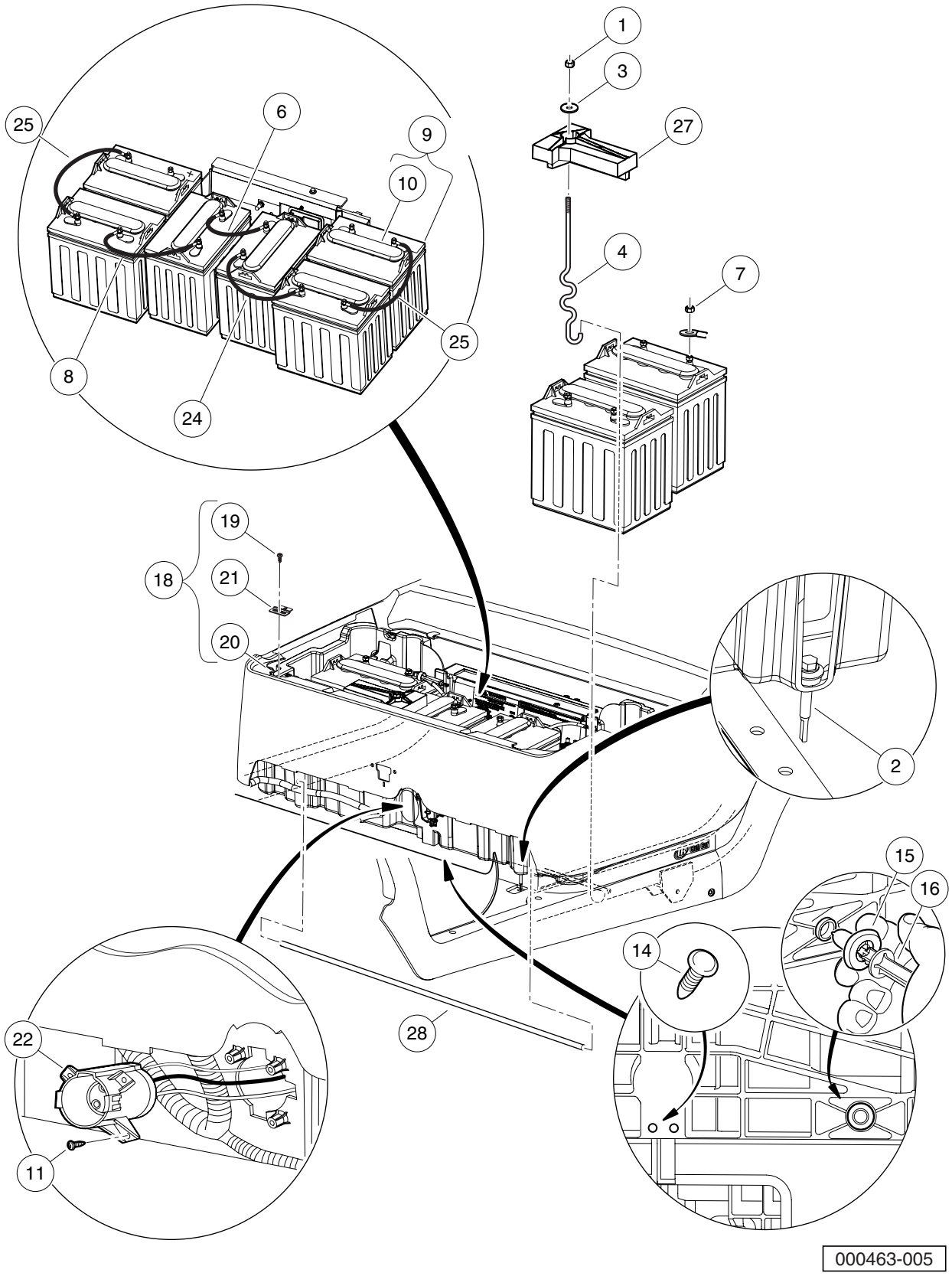
1
3
27
4
7
25
6
9
10
8
24
25
19
18
21
20
2
15
16
14
28
22
11
000463-005

BATTERIES, BUCKET, AND CHARGER RECEPTACLE – IQ AND EXCEL SYSTEMS, CE, STYLE C

ITEM	PART NO.	DESCRIPTION	QTY
		1 2 3 4	
1	1014555	Locknut, 7/16-14 Nylon Insert	2
2	102292356	Screw-1/4-20x56 Hwh Self Drill	4
3	102491501	Washer Hard,m10	2
4	103357701	Bolt, Battery, "s" Hold-down	2
5	N/A	Bucket Asm - 8v, Ce (includes items 6 through 26)	1
6	1010958	Asm, Wire, #6blk 8in	1
7	1014304	Nut, 5/16-18 Stainless-Steel Hex	12
8	101795701	Asm, Wire, #6blk 13in	1
9	101797701	Battery, 8-Volt, T875 (includes item 10)	6
10	101797801	Cap, 4-Gang Battery	1
11	101832001	Screw, #7-19 X 0.625 Phillips Pan-Head Tap	3
12	101865805	Decal Ce	1
13	102571202	Kit Ce Plug - Bucket Elec (includes items 14 through 17)	1
14	1010434	Barrel - Plastic	2
15	102571101	Plug, 1/2", Ce Bucket	6
16	102571901	Instal Tool, Ce Bucket Plug	1
17	103395601	Instr, Prec Ce Bucket Plug	1
18	103368401	Asm, Bucket, Batt, Elec, Prec (includes items 19 through 21)	1
19	102298020	Screw, K80x20, Torx Pn Hd Pt	2
20	N/A	Bucket, Batt, Elec, Precedent	1
21	103368301	Hinge, Nested	2
22	103375501	Asm, Prec Restyle Receptacle	1
23	N/A	Asm, Elect Module, Prec/res Ce	1
24	103376001	Wire Asm #6 Blk, Prec/restyle	1
25	103413901	Wire Asm, #6 Blk #21	2
26	8639	Tie Wrap, 11" Nylon	2
27	103374801	Hold Down, Battery	2
28	103375301	Tube, Cross, Battery Rod	1

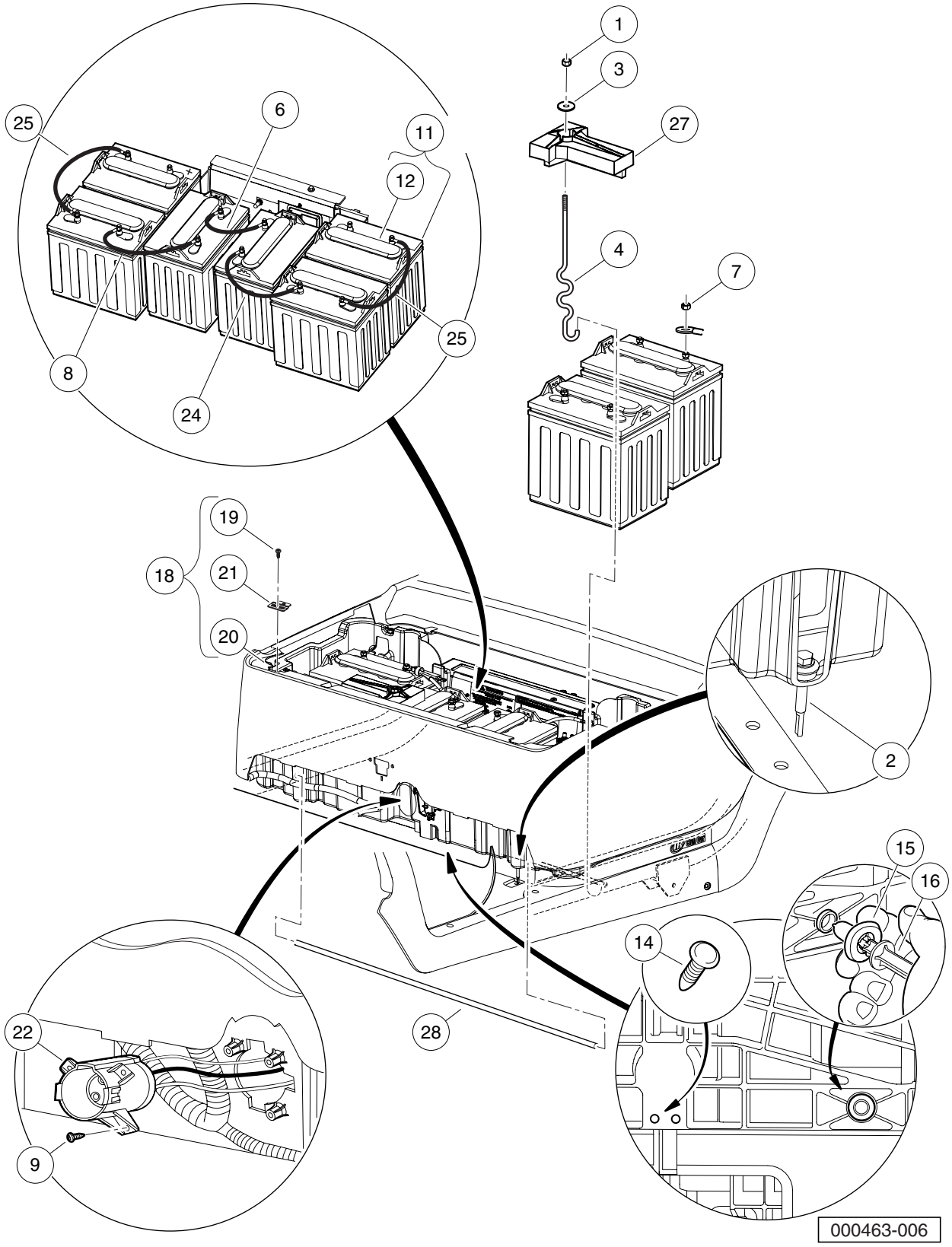
1
3
27
4
7
25
6
11
12
8
24
25
19
18
21
20
2
15
16
14
22
28
9
000463-006

BATTERIES, BUCKET, AND CHARGER RECEPTACLE – IQ AND EXCEL SYSTEMS, HEAVY DUTY, CE, STYLE C

ITEM	PART NO.	DESCRIPTION	QTY
		1 2 3 4	
1	1014555	Locknut, 7/16-14 Nylon Insert	2
2	102292356	Screw-1/4-20x56 Hwh Self Drill	4
3	102491501	Washer Hard,m10	2
4	103357701	Bolt, Battery, "s" Hold-down	2
5	N/A	Bucket Asm - 8v, Hd, Ce (includes items 6 through 26)	1
6	1010958	Asm, Wire, #6blk 8in	1
7	1014304	Nut, 5/16-18 Stainless-Steel Hex	12
8	101795701	Asm, Wire, #6blk 13in	1
9	101832001	Screw, #7-19 X 0.625 Phillips Pan-Head Tap	3
10	101865805	Decal Ce	1
11	101964201	Battery, 8v Trojan T890 (Wet) (includes item 12)	6
12	101797801	Cap, 4-Gang Battery	1
13	102571202	Kit Ce Plug - Bucket Elec (includes items 14 through 17)	1
14	1010434	Barrel - Plastic	2
15	102571101	Plug, 1/2", Ce Bucket	6
16	102571901	Instal Tool, Ce Bucket Plug	1
17	103395601	Instr, Prec Ce Bucket Plug	1
18	103368401	Asm, Bucket, Batt, Elec, Prec (includes items 19 through 21)	1
19	102298020	Screw, K80x20, Torx Pn Hd Pt	2
20	N/A	Bucket, Batt, Elec, Precedent	1
21	103368301	Hinge, Nested	2
22	103375501	Asm, Prec Restyle Receptacle	1
23	N/A	Asm, Elect Module, Prec/res Ce	1
24	103376001	Wire Asm #6 Blk, Prec/restyle	1
25	103413901	Wire Asm, #6 Blk #21	2
26	8639	Tie Wrap, 11" Nylon	2
27	103374801	Hold Down, Battery	2
28	103375301	Tube, Cross, Battery Rod	1

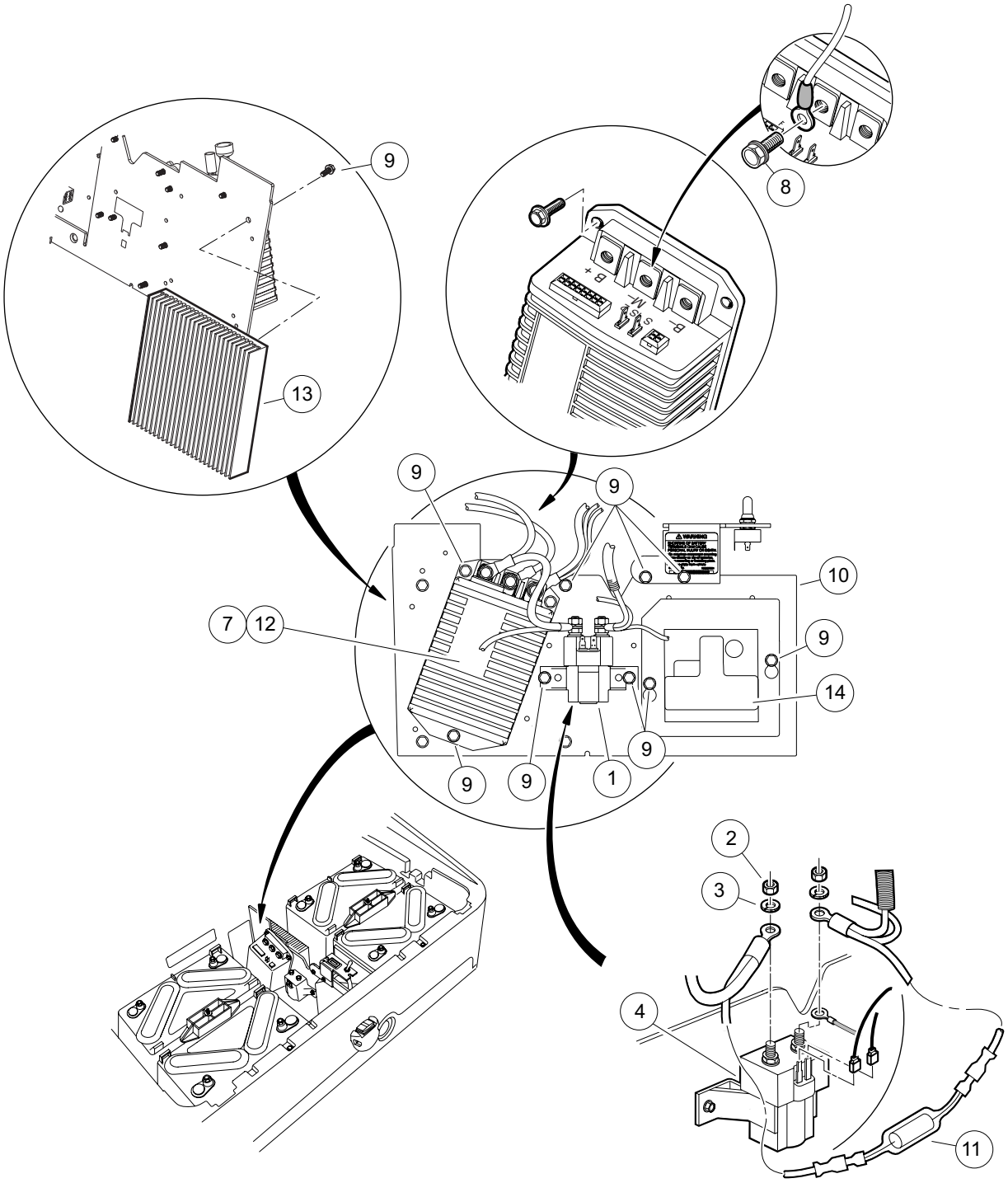

000486-001

COMPUTER, CONTROLLER, AND SOLENOID – IQ SYSTEM, STYLE A

ITEM	PART NO.	DESCRIPTION	QTY
		1 2 3 4	
1	101908701	Solenoid, 48-Volt (includes items 2 through 6)	1
2	1012528	Nut, M8-1.25 Hex	2
3	1013734	Lockwasher, 8mm Split	2
4	N/A	Solenoid, 48-Volt	1
5	N/A	Washer, Lock	2
6	N/A	Nut	2
7	101956503	Controller, 48-volt, IQ, CE Mark	1
8	102240501	Bolt, Controller, Terminal	3
9	102296716	Screw, M6 X 16 Tt Hx Fl Hd	13
10	102510802	Plate - Heat Sink Mntg Solnd	1
11	102522701	Asm, Pre-charge Resistor	1
12	102806201	Controller, IQ, 48-volt	1
13	103262001	Heat Sink Prec	1
14	103403201	Precedent V3.0 Obc	1

Note: Item 7 is for vehicles shipped to the European Union. Items 5 & 6 are not used in this application.

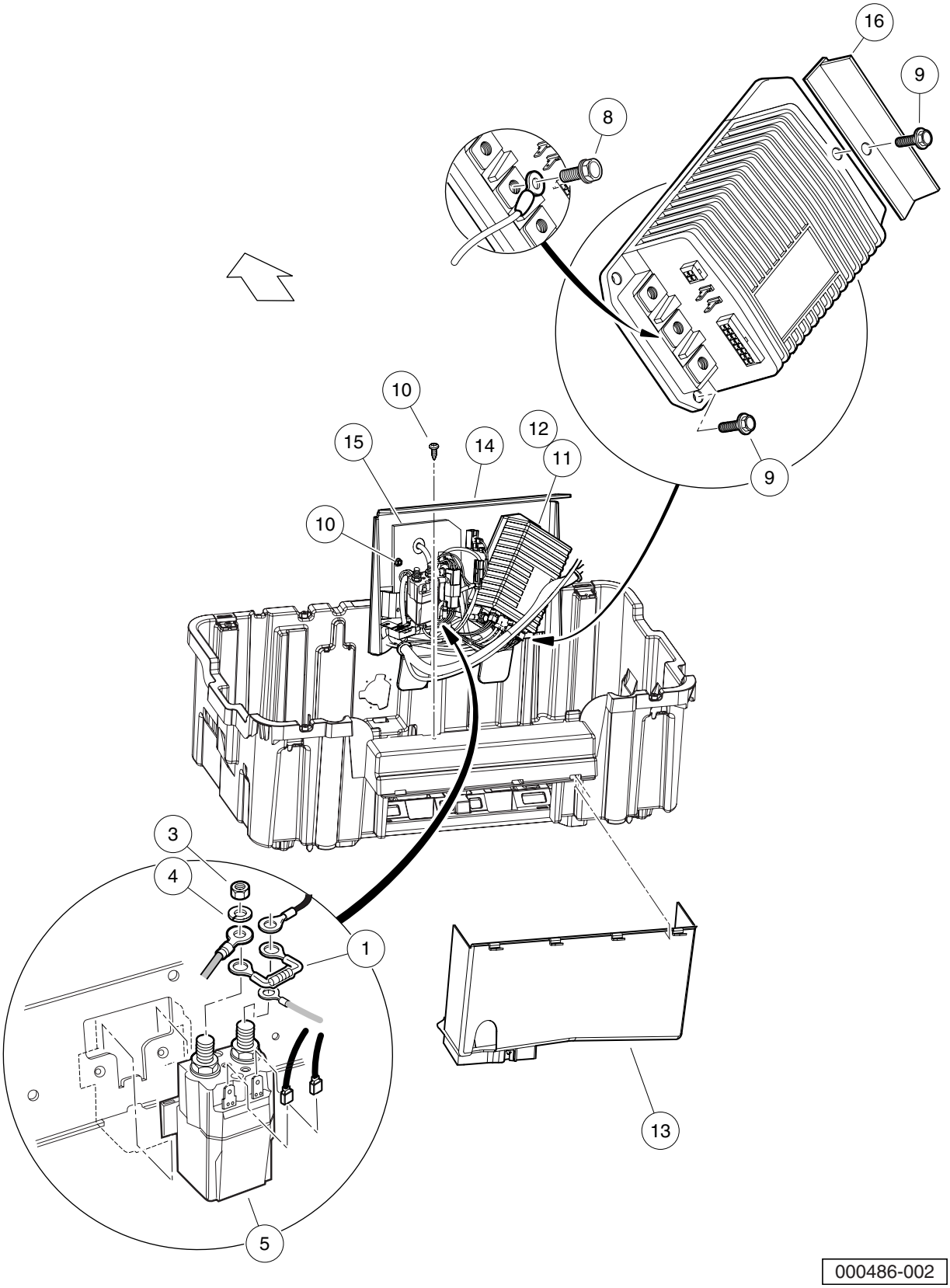
16
9
8
10
12
15
14
11
9
10
3
4
1
13
5
000486-002

COMPUTER, CONTROLLER, AND SOLENOID – IQ SYSTEM, STYLES B AND C

ITEM	PART NO.	DESCRIPTION	QTY
		1 2 3 4	
1	1014947	Resistor Assembly	1
2	101908701	Solenoid, 48-Volt (includes items 3 through 7)	1
3	1012528	Nut, M8-1.25 Hex	2
4	1013734	Lockwasher, 8mm Split	2
5	N/A	Solenoid, 48-Volt	1
6	N/A	Washer, Lock	2
7	N/A	Nut	2
8	102240501	Bolt, Controller, Terminal	3
9	102296716	Screw, M6 X 16 Tt Hx Fl Hd	11
10	102298020	Screw, K80x20, Torx Pn Hd Pt	1
11	102806201	Controller, IQ, 48-volt	1
12	102806203	Controller, 48v Iq Golf, Ce	1
13	103367901	Shield - Controller	1
14	103369401	Component Mounting Plate	1
15	103446601	Obc, Prec, V4.0	1
16	103498501	Watershed, Controller, Angle	1

Note: Item 8 is for vehicles shipped to the European Union. Items 6 & 7 are not used in this application.

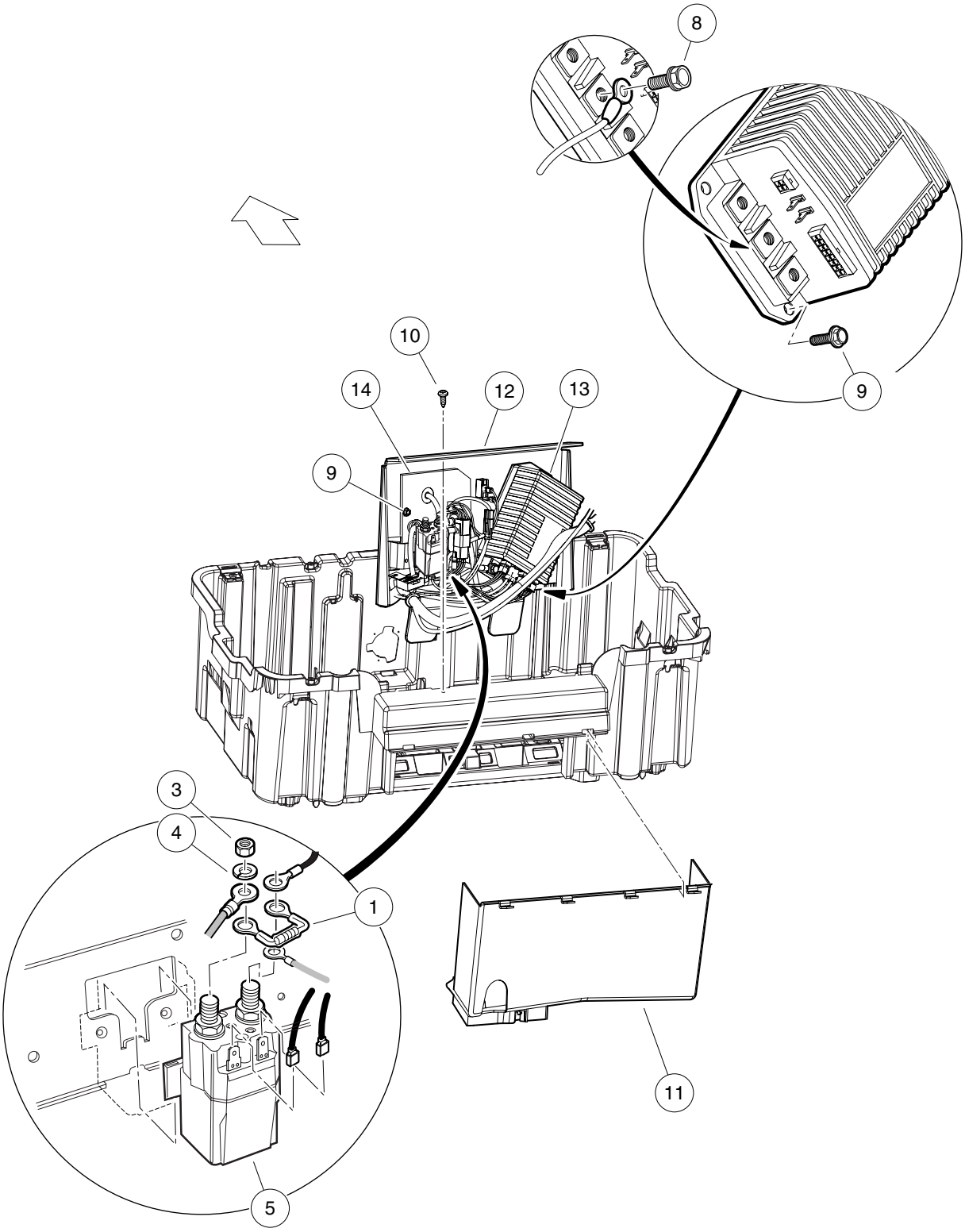

000486-003

COMPUTER, CONTROLLER, AND SOLENOID – EXCEL SYSTEM, STYLES B AND C

ITEM	PART NO.	DESCRIPTION	QTY
		1 2 3 4	
1	1014947	Resistor Assembly	1
2	101908701	Solenoid, 48-Volt (includes items 3 through 7)	1
3	1012528	Nut, M8-1.25 Hex	2
4	1013734	Lockwasher, 8mm Split	2
5	N/A	Solenoid, 48-Volt	1
6	N/A	Washer, Lock	2
7	N/A	Nut	2
8	102240501	Bolt, Controller, Terminal	3
9	102296716	Screw, M6 X 16 Tt Hx Fl Hd	11
10	102298020	Screw, K80x20, Torx Pn Hd Pt	1
11	103367901	Shield - Controller	1
12	103369401	Component Mounting Plate	1
13	103403401	Controller, Excel	1
14	103446601	Obc, Prec, V4.0	1
15	103498501	Watershed, Controller, Angle	1

Note: Items 6 & 7 are not used in this application.

12

E

ELECTRIC MOTOR

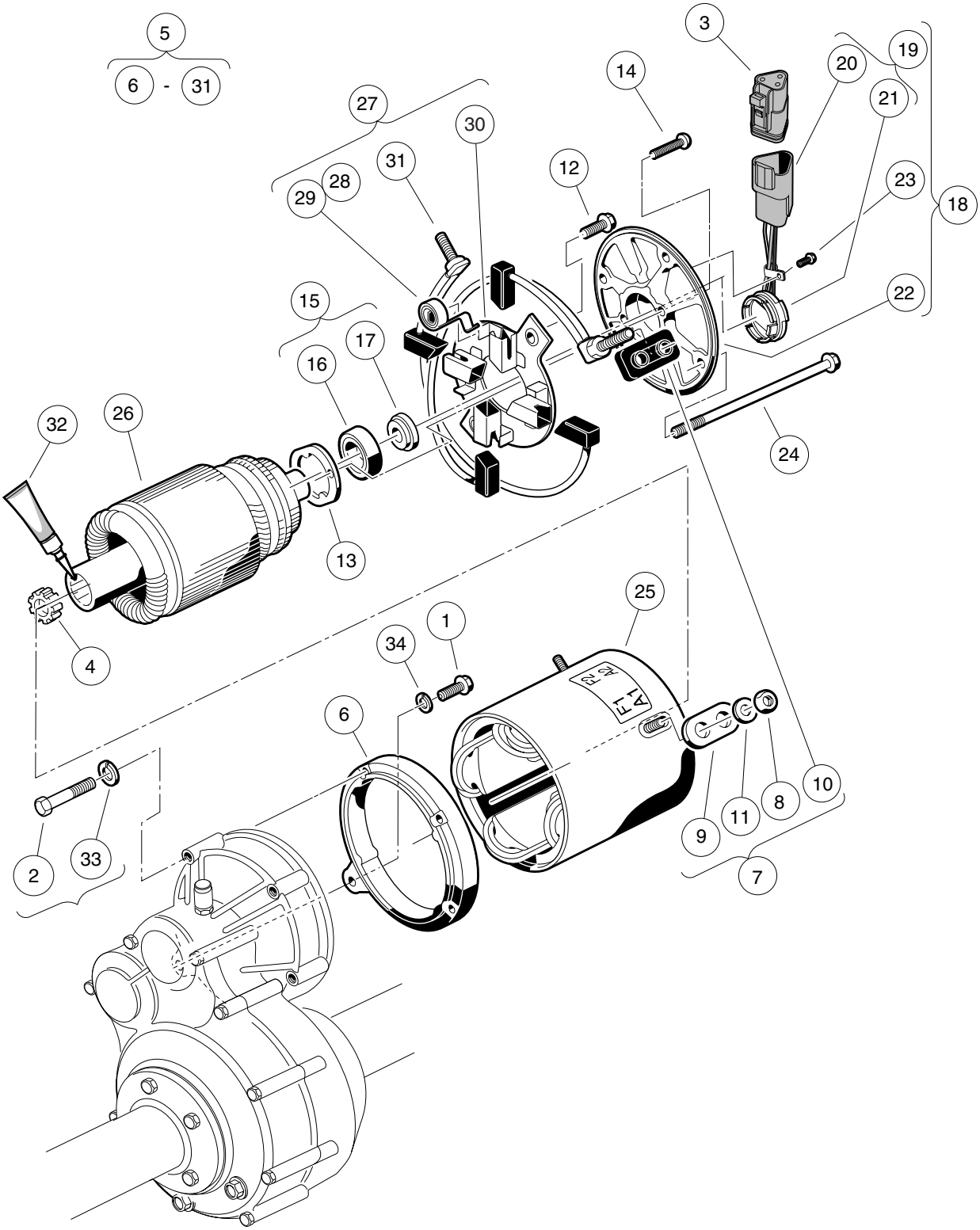
5
6 - 31
3
19
20
21
14
27
30
31
12
28
29
23
18
15
22
17
16
32
26
24
13
25
1
34
4
6
10
8
11
9
7
2
33

000349-002

MOTOR (MODEL 5BC59JBS6390) – ELECTRIC VEHICLE

ITEM	PART NO.	DESCRIPTION	QTY
		1 2 3 4	
1	1010934	Screw, 5/16-18 X 1.00 Hex Cap	1
2	1014201	Screw, 1/4-20 X 2.25 Hex Cap	3
3	101920101	Kit, 3-Pin Wedge Lock	1
4	102235201	Bumper, Drive Unit	1
5	N/A	Motor, 48-Volt Non-Skew IQ * (includes items 6 through 27)	1
6	1017944	End Shield	1
7	1017947	Hardware Package (includes items 8 through 11)	1
8	1011280	Locknut, 5/16-18	4
9	N/A	Insulator Bushing	2
10	N/A	Insulated Bushing	2
11	1241	Washer, 5/16 Type A Flat	4
12	1017949	Screw, #6-32 X 0.480 Hex-Head	2
13	1017950	Bearing Retainer	1
14	1017953	Screw, Bearing Retainer	2
15	102265701	Kit, Bearing and Magnet (includes items 16 and 17)	1
16	N/A	Ball Bearing	1
17	N/A	Magnet	1
18	102265901	Motor End Shield Asm (includes items 19 through 23)	1
19	102265601	Speed Sensor Assembly (includes items 20 and 21)	1
20	101942301	Kit, 3-Pin Wedge Lock	1
21	N/A	Sensor, Speed, without Connector	1
22	102266001	End Shield, Motor	1
23	102267001	Screw, #8-32 X 0.375 Hex-Head	1
24	102266101	Screw, #10 - 32 X 8.250	4
25	103325701	Stator Shell and Winding	1
26	N/A	Non Skew Armature	1
27	103337601	Brush Assembly, IQ Motor, Non-Skew (includes items 28 through 31)	1
28	1011411	Kit, Brush Spring (ge Motor) (includes item 29)	1
29	N/A	Brush Spring	4
30	103325501	Brush Rigging, Non-Skew Motor	1
31	103325601	Brush Set, Non-Skew	1
32	102243403	Lubricant, Moly-Teflon (Single-Use Tube)	1
33	451	Lockwasher, 1/4 Helical Split	3
34	7174	Lockwasher, 5/16 Split	1

* Note: The model 5BC59JBS6390 motor has been discontinued. To replace the motor, use motor model EJ8-4001A.

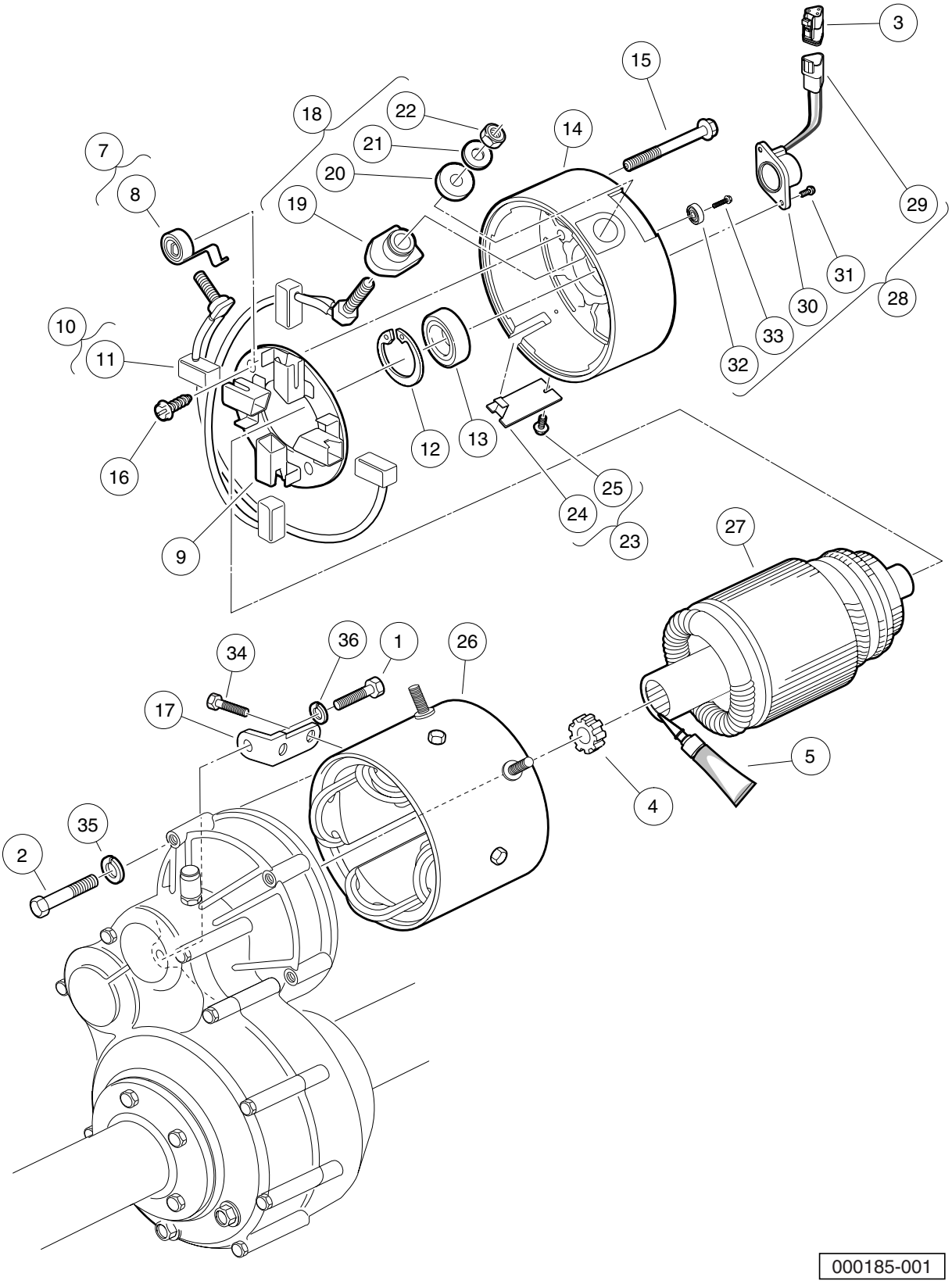
3
15
29
18
22
14
21
7
20
8
19
31
30
28
10
33
11
32
12
13
16
25
24
23
27
9
36
1
26
34
17
5
4
35
2
000185-001

MOTOR (MODEL EJ4-4001) – ELECTRIC VEHICLE

ITEM	PART NO.	DESCRIPTION	QTY
		1 2 3 4	
1	1010934	Screw, 5/16-18 X 1.00 Hex Cap	1
2	1014201	Screw, 1/4-20 X 2.25 Hex Cap	3
3	101920101	Kit, 3-Pin Wedge Lock	1
4	102235201	Bumper, Drive Unit	1
5	102243403	Lubricant, Moly-Teflon (Single-Use Tube)	1
6	N/A	IQ Electric Motor, 48-VDC 3.3 hp * (includes items 7 through 34)	1
7	102186001	Spring Kit, Motor Brush (includes item 8)	1
8	N/A	Spring, Brush, S-g	4
9	102186101	Brush Box Assembly	1
10	102186201	Brush Kit, Motor (includes item 11)	1
11	N/A	Assembly, Brush and Terminal	2
12	102186301	Ring, 2.24" Internal Retaining	1
13	102186401	Bearing, Ball	1
14	102186701	End Cap, Motor	1
15	N/A	Screw, 1/4-20 X 2.25 Hex-Head Washer	2
16	102186901	Screw, #8-32 X .5 Hex-Head	2
17	102187001	L-Bracket, Motor	1
18	102187101	Hardware Kit, Motor Terminal (includes items 19 through 22)	2
19	N/A	Bushing, Nylon	2
20	N/A	Washer, Nylon Flat	2
21	N/A	Washer, Flat, 5/16 Steel	2
22	N/A	Nut, Brass Hex, 5/16 - 18	2
23	102187201	Plate Kit, Motor Cover (includes items 24 and 25)	1
24	N/A	Assembly, Cover Plate	1
25	N/A	Screw, #8-32 x 0.375, Taptite Thread	1
26	102704701	Frame and Field Assembly	1
27	102704801	Armature Assembly	1
28	102704901	Kit, Speed Sensor (includes items 29 through 33)	1
29	101942301	Kit, 3-Pin Wedge Lock	1
30	N/A	Sensor, Motor Speed, ADC	1
31	N/A	Screw, #8-32, Taptite Thread	2
32	N/A	Magnet, ADC Motor	1
33	N/A	Screw, 1/4-20 x 0.5	1
34	N/A	Bolt, 1/4 - 20 x 0.73 Thread-Forming	2
35	451	Lockwasher, 1/4 Helical Split	3
36	7174	Lockwasher, 5/16 Split	1

* Note: The model EJ4-4001 motor has been discontinued. To replace the motor, use motor model EJ8-4001A.

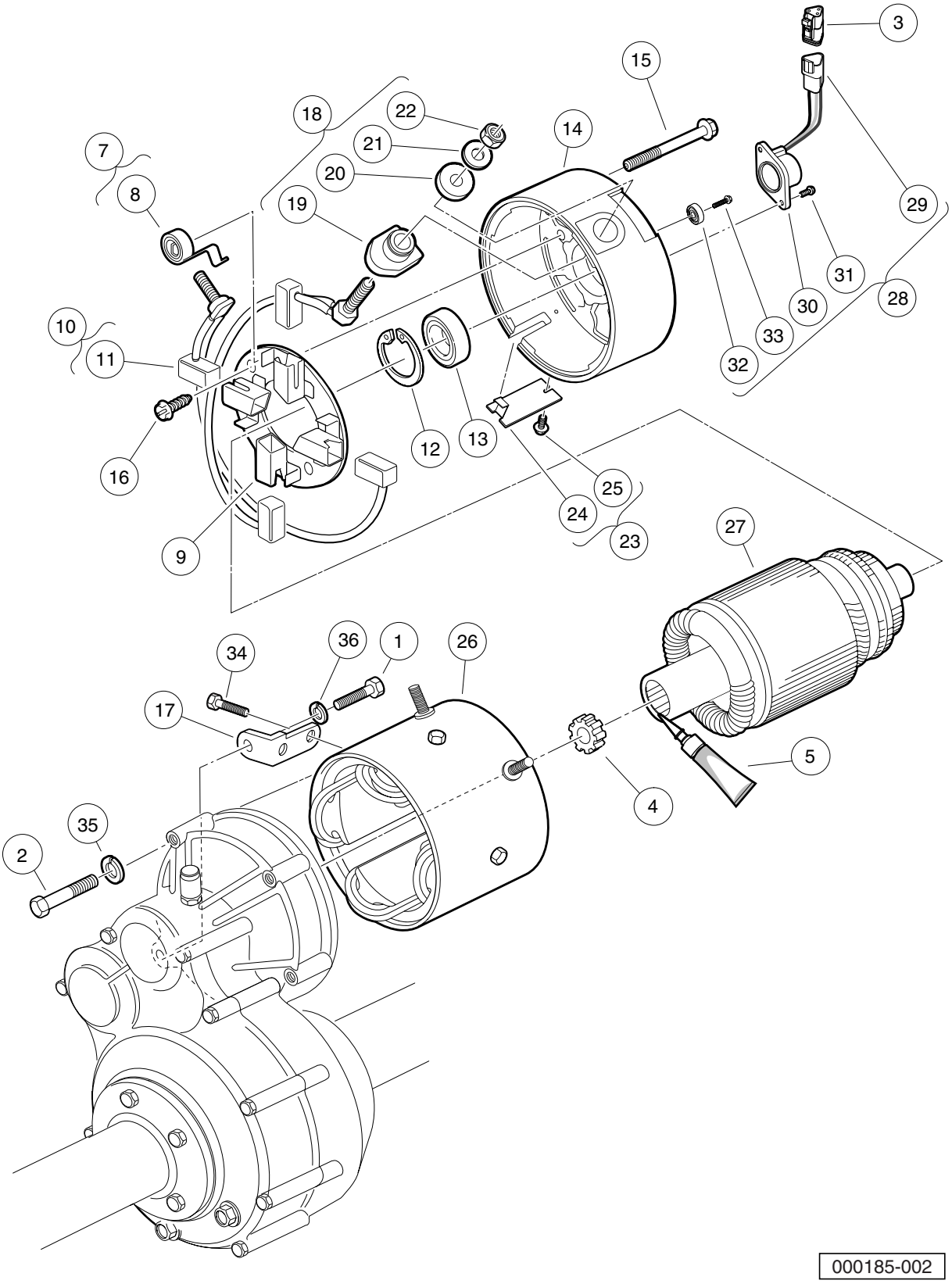
3
15
29
18
22
14
21
7
20
8
19
31
30
28
10
33
11
32
12
13
16
25
24
23
27
9
36
1
26
34
17
5
4
35
2
000185-002

MOTOR (MODEL EJ8-4001A) – ELECTRIC VEHICLE

ITEM	PART NO.	DESCRIPTION	QTY
		1 2 3 4	
1	1010934	Screw, 5/16-18 X 1.00 Hex Cap	1
2	1014201	Screw, 1/4-20 X 2.25 Hex Cap	3
3	101920101	Kit, 3-Pin Wedge Lock	1
4	102235201	Bumper, Drive Unit	1
5	102243403	Lubricant, Moly-Teflon (Single-Use Tube)	1
6	103572501	IQ Electric Motor, 48-VDC 3.3 hp (includes items 7 through 34)	1
7	102186001	Spring Kit, Motor Brush (includes item 8)	1
8	N/A	Spring, Brush, S-g	4
9	102186101	Brush Box Assembly	1
10	102186201	Brush Kit, Motor (includes item 11)	1
11	N/A	Assembly, Brush and Terminal	2
12	102186301	Ring, 2.24" Internal Retaining	1
13	102186401	Bearing, Ball	1
14	102186701	End Cap, Motor	1
15	N/A	Screw, 1/4-20 X 2.25 Hex-Head Washer	2
16	102186901	Screw, #8-32 X .5 Hex-Head	2
17	102187001	L-Bracket, Motor	1
18	102187101	Hardware Kit, Motor Terminal (includes items 19 through 22)	2
19	N/A	Bushing, Nylon	2
20	N/A	Washer, Nylon Flat	2
21	N/A	Washer, Flat, 5/16 Steel	2
22	N/A	Nut, Brass Hex, 5/16 - 18	2
23	102187201	Plate Kit, Motor Cover (includes items 24 and 25)	1
24	N/A	Assembly, Cover Plate	1
25	N/A	Screw, #8-32 x 0.375, Taptite Thread	1
26	102704701	Frame and Field Assembly	1
27	102704801	Armature Assembly	1
28	102704901	Kit, Speed Sensor (includes items 29 through 33)	1
29	101942301	Kit, 3-Pin Wedge Lock	1
30	N/A	Sensor, Motor Speed, ADC	1
31	N/A	Screw, #8-32, Taptite Thread	2
32	N/A	Magnet, ADC Motor	1
33	N/A	Screw, 1/4-20 x 0.5	1
34	N/A	Bolt, 1/4 - 20 x 0.73 Thread-Forming	2
35	451	Lockwasher, 1/4 Helical Split	3
36	7174	Lockwasher, 5/16 Split	1

13

E

TRANSAXLE – ELECTRIC VEHICLES

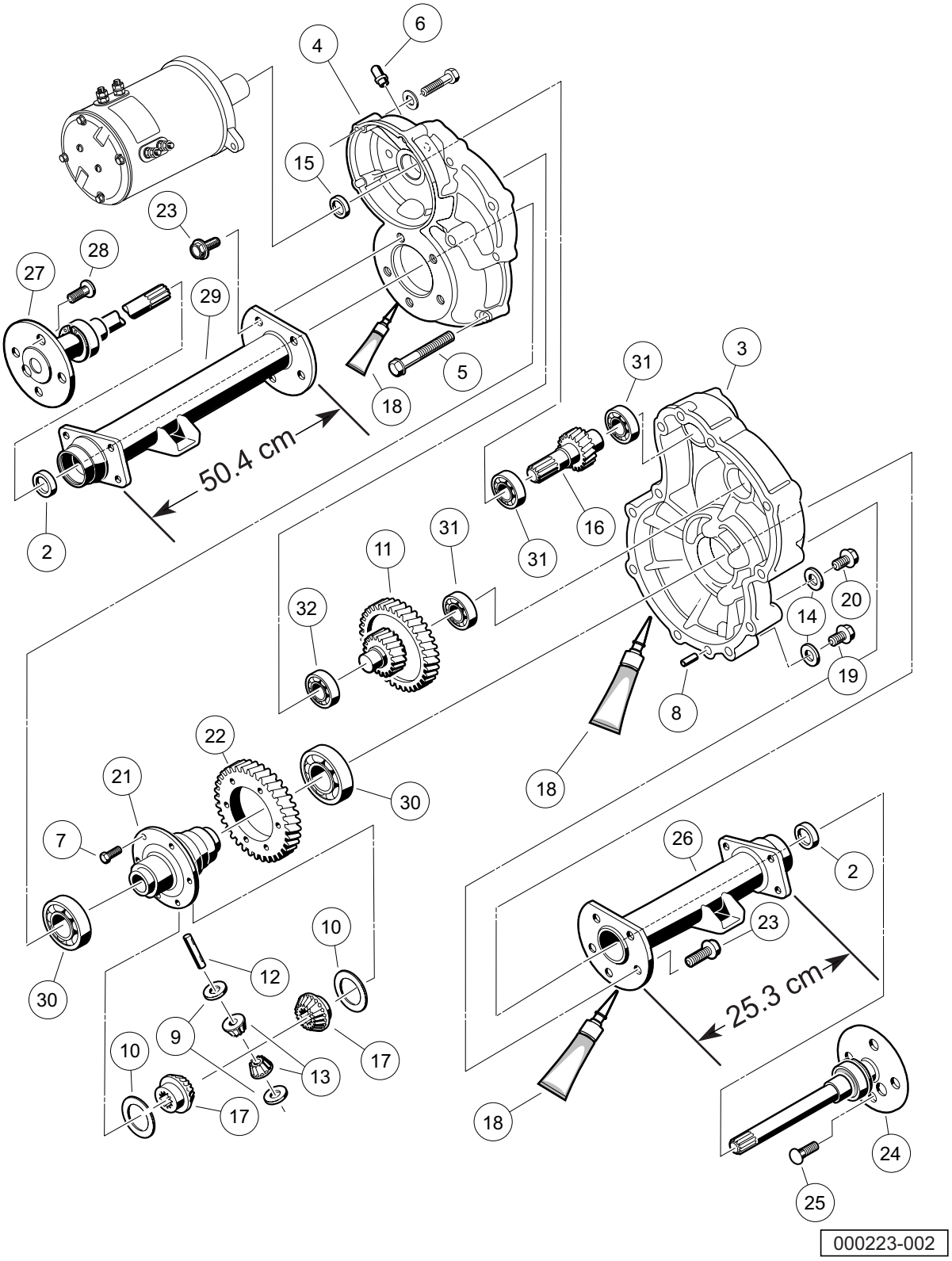
6
4
15
23
28
27
29
5
18
50.4 cm
2
31
3
16
31
31
11
32
20
14
19
8
18
22
21
30
7
30
10
12
9
10
13
17
17
26
2
23
25.3 cm
18
24
25
000223-002

ITEM	PART NO.	DESCRIPTION	QTY
		1 2 3 4	
1	102771701	Transaxle, Electric (includes items 2 through 32)	1
2	1013794	Axle Shaft Oil Seal	2
3	101895401	Gear Case, Left-Hand	1
4	101895501	Gear Case, Passenger-Side	1
5	101897001	Screw, M8-1.25 X 60mm Hex-Head	11
6	101897201	Breather	1
7	101897401	Screw, M10-1.25 X 25mm	6
8	101897601	Pin, 11mm OD X 8.5mm ID X 10mm	2
9	101903601	Washer, Thrust	2
10	101903701	Washer, Thrust	2
11	101906901	Intermediate Shaft Assembly	1
12	101922101	Pin, 15.99mm X 88.7mm Dowel	1
13	101923001	Gear, Differential Idler	2
14	101923201	Gasket	2
15	101923501	Seal, Lip	1
16	101923701	Shaft, Input	1
17	101923901	Gear, Differential	2
18	101928701	Liquid Gasket (Transaxle case)	A/R
19	101972101	Plug, M14-1.5 X 12mm Magnetic	1
20	101972201	Plug, M14-1.5 X 12mm Hex	1
21	102356601	Housing, Differential, 6 Bolt	1
22	102356801	Gear, Differential Output, 6-Bolt	1
23	102357001	Screw, Flg Hd M10 X 1.5 X 30	10
24	102886301	Axle Assembly, Driver-Side (includes item 25)	1
25	101922201	Lug Stud	4
26	102886401	Tube, Axle, Driver-Side	1
27	102886501	Axle Assembly, Passenger-Side (includes item 28)	1
28	101922201	Lug Stud	4
29	102886601	Tube, Axle, Passenger-Side	1
30	7330	Inner Axle Tube Bearing	2
31	7335	Bearing	3
32	7336	Bearing	1

14

E

BATTERY CHARGERS

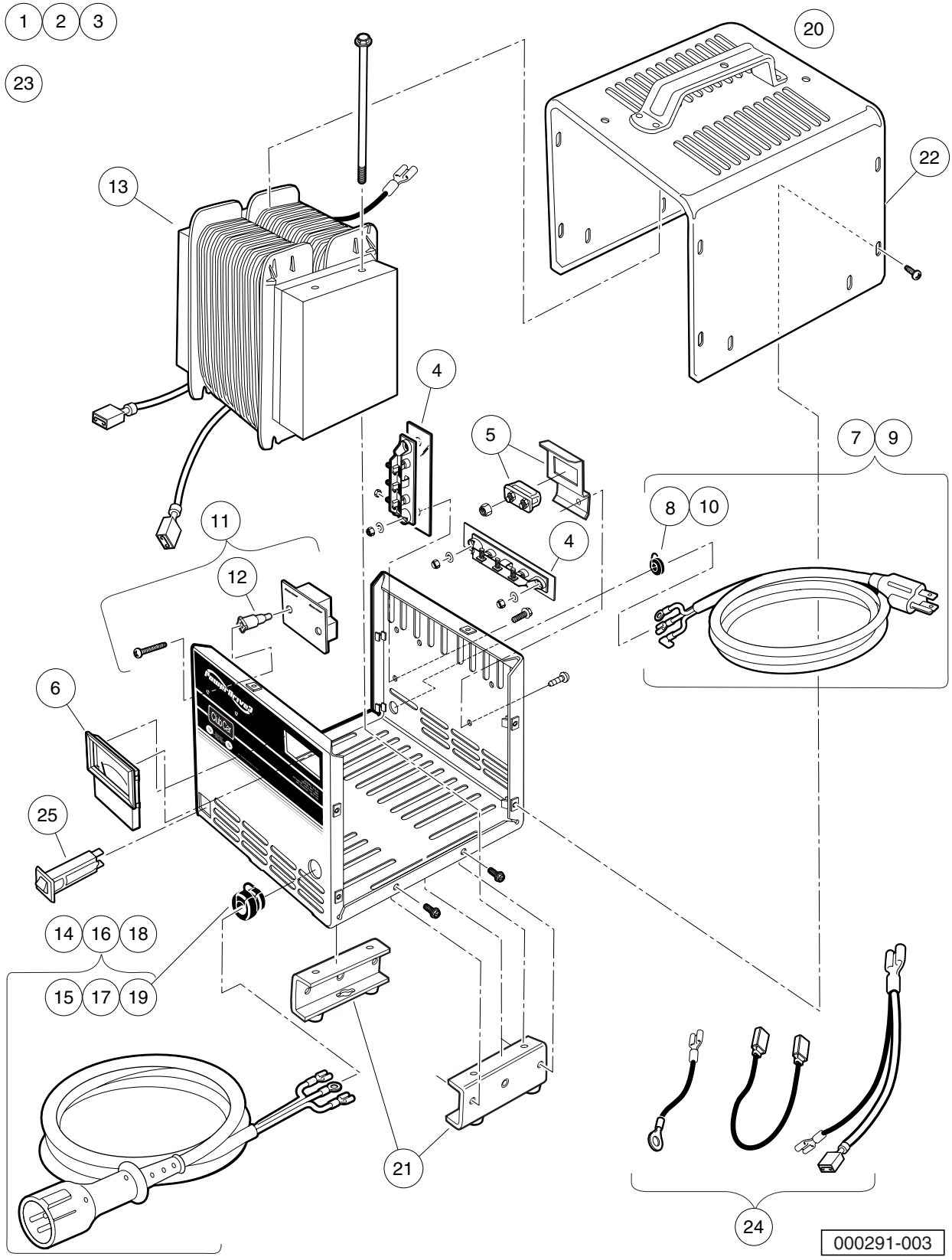
1
2
3
23
20
22
13
4
5
7
9
8
10
11
12
4
6
25
14
16
18
15
17
19
21
24
000291-003

POWERDRIVE 3 BATTERY CHARGER, DOMESTIC

ITEM	PART NO.	DESCRIPTION	QTY
		1 2 3 4	
1	103499101	Chgr, Pd3 Stnry, 9Dc/6'Ac'	1
2	103499102	Chgr, Pd3 Stnry, 12Dc/9'Ac'	1
3	103499103	Chgr, Pd3 Stnry, 20Dc/9'Ac'(includes items 4 through 25)	1
4	1015914	Rectifier with Heatsink Assembly	2
5	102273701	PD2 Fuse Asm	1
6	102273801	PD2 Ammeter	1
7	103428501	Kit, PD3 Cordset - AC 80" (includes item 8)	1
8	102273901	PD2 AC Cord Bushing	1
9	103428601	Kit, PD3 Cordset, - AC 114" (includes item 10)	1
10	102273901	PD2 AC Cord Bushing	1
11	103428701	Asm, PD3 Board Relay (includes item 12)	1
12	103429701	PD3 Plastic Stand-Offs	2
13	103428801	PD3 Transformer	1
14	103429001	PD3 Cordset - DC 113" (includes item 15)	1
15	1012098	Bushing, DC Cord	1
16	103429101	PD3 Cordset - DC 154" (includes item 17)	1
17	1012098	Bushing, DC Cord	1
18	103429201	PD3 Cordset - DC 205" (includes item 19)	1
19	1012098	Bushing, DC Cord	1
20	103429301	Asm, PD3 Case (includes items 21 and 22)	1
21	103434001	Asm, PD3 Legs	1
22	103439901	PD3Case Top (Includes Handle)	1
23	103429501	Kit, PD3 Hardware	1
24	103429601	Kit, PD3 Wires	1
25	CCX8506	Circuit Breaker, 15-Amp/120-Volt	1

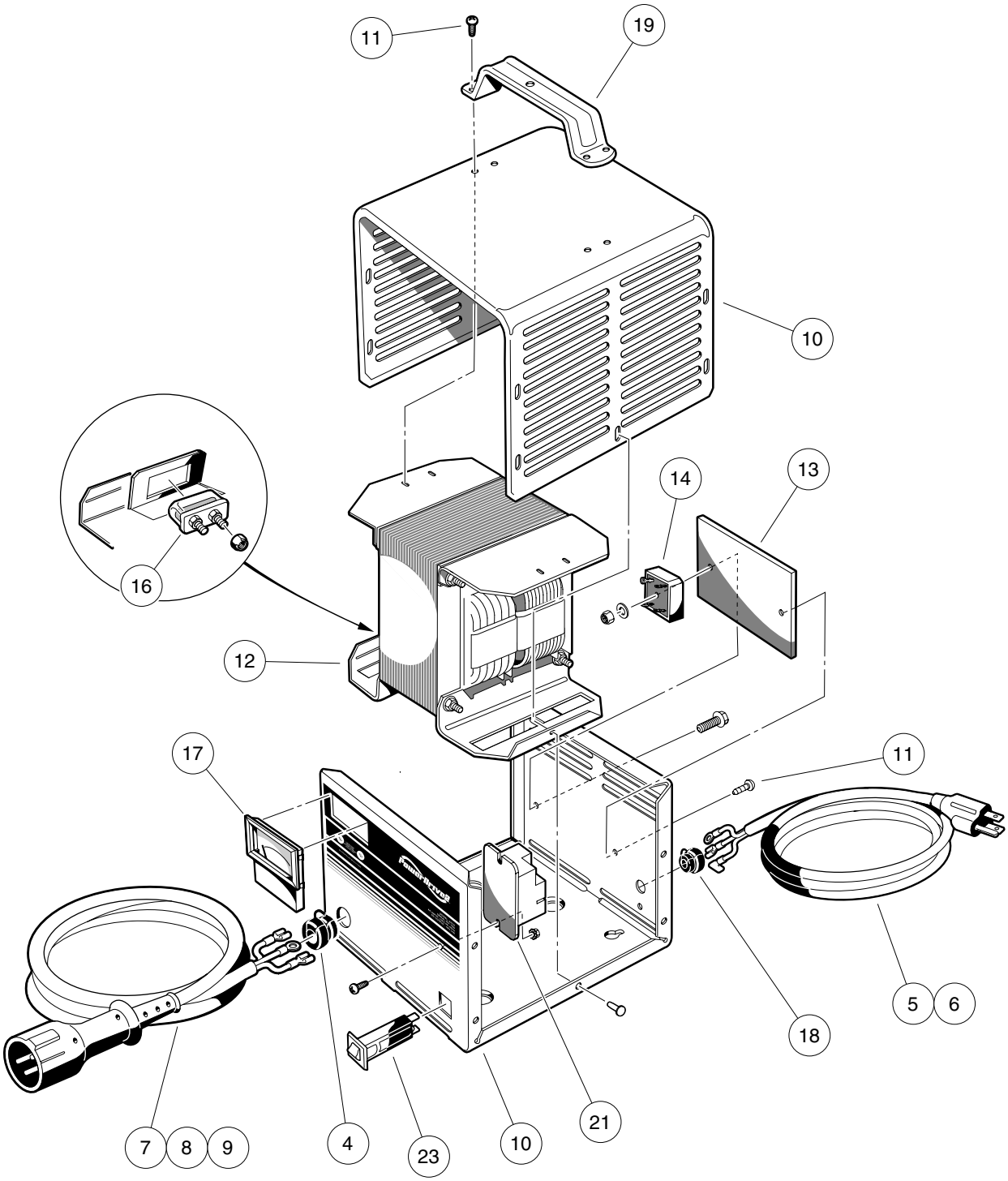

000291-001

POWERDRIVE 2 BATTERY CHARGER (MODEL 22110), DOMESTIC

ITEM	PART NO.	DESCRIPTION	QTY
		1 2 3 4	
1	N/A	48-V/13-A PowerDrive 2 (9-ft. DC, 6-ft. AC)	1
2	N/A	48-V/13-A PowerDrive 2 (12-ft. DC, 9-ft. AC)	1
3	N/A	48-V/13-A PowerDrive 2 (20-ft. DC, 9-ft. AC) (includes items 4 through 23)	1
4	1012098	Bushing, DC Cord	1
5	101828801	Cord, AC, 80-Inch (203 cm)	1
6	101828802	Cord, AC, 108-Inch (274 cm)	1
7	101828904	PD2 DC Cordset, 113-inch	1
8	101828905	PD2 DC Cordset, 154-inch	1
9	101828906	Pd2 Dc Cordset 250 Inch	1
10	102273201	PD2 Case (includes item 11)	1
11	7577	Screw, #10 X 0.50 Phillips Pan-Head	12
12	102273301	PD2 Transformer Asm	1
13	102273401	PD2 Heatsink	1
14	102273501	PD2 Diode Bridge w/Film	1
15	102273601	PD2 Wire Asm	1
16	102273701	PD2 Fuse Asm	1
17	102273801	PD2 Ammeter	1
18	102273901	PD2 AC Cord Bushing	1
19	102274001	PD2 Handle	1
20	103414901	Kit, Relay, 48v 30a W/instr (includes items 21 and 22)	1
21	103397901	Relay, Spst No, 48v 30a, Pmt	1
22	103415001	Kit, Relay, 48v 30a Instrns	1
23	CCX8506	Circuit Breaker, 15-Amp/120-Volt	1

Note: Item 16 not shown. Level 1 Battery Charger part numbers include one AC and one DC cord. They do not include all of the level 2 cords listed.

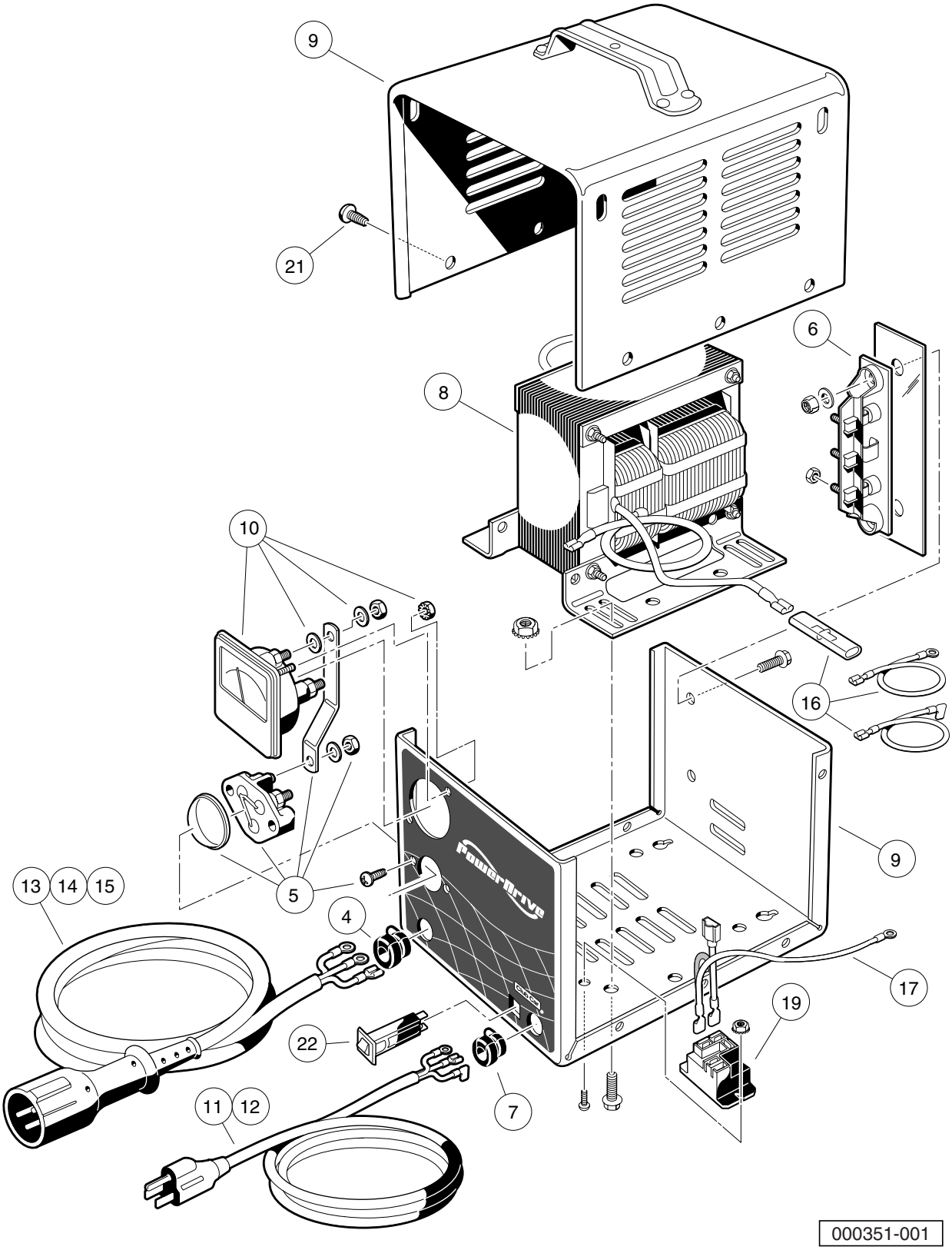
9
21
6
8
10
16
9
13
14
15
5
4
17
19
22
7
11
12
000351-001

POWERDRIVE BATTERY CHARGER (MODEL 17930), DOMESTIC

ITEM	PART NO.	DESCRIPTION	QTY
		1 2 3 4	
1	101802201	48V/17A PowerDrive (9-ft DC, 6-ft AC Cord)	1
2	101802202	48V/17A PowerDrive (12-ft DC, 9-ft AC Cord)	1
3	101802203	48V/17A PowerDrive (20-ft DC, 9-ft AC Cord) (includes items 4 through 22)	1
4	1012098	Bushing, DC Cord	1
5	1012101	Fuse Assembly	1
6	1015914	Rectifier with Heatsink Assembly	1
7	1015917	Bushing, AC Cord	1
8	****	Transformer, Battery Charger	1
9	101828301	Case Assembly	1
10	****	Ammeter	1
11	101828801	Cord, AC, 80-Inch (203 cm)	1
12	101828802	Cord, AC, 108-Inch (274 cm)	1
13	101828901	Cord, DC, 113-Inch (287 cm)	1
14	101828902	Cord, DC, 154-Inch (391 cm)	1
15	101828903	Cord, DC, 250-Inch (635 cm)	1
16	101831101	Wire Assembly Kit	1
17	101914401	Assembly, Voltage Suppressor	1
18	103414901	Kit, Relay, 48v 30a W/instr (includes items 19 and 20)	1
19	103397901	Relay, Spst No, 48v 30a, Pmt	1
20	103415001	Kit, Relay, 48v 30a Instrns	1
21	7577	Screw, #10 X 0.50 Phillips Pan-Head	10
22	CCX8506	Circuit Breaker, 15-Amp/120-Volt	1

**** Special order item available upon request.

Note: Level 1 Battery Charger part numbers include one AC and one DC cord. They do not include all of the level 2 cords listed.

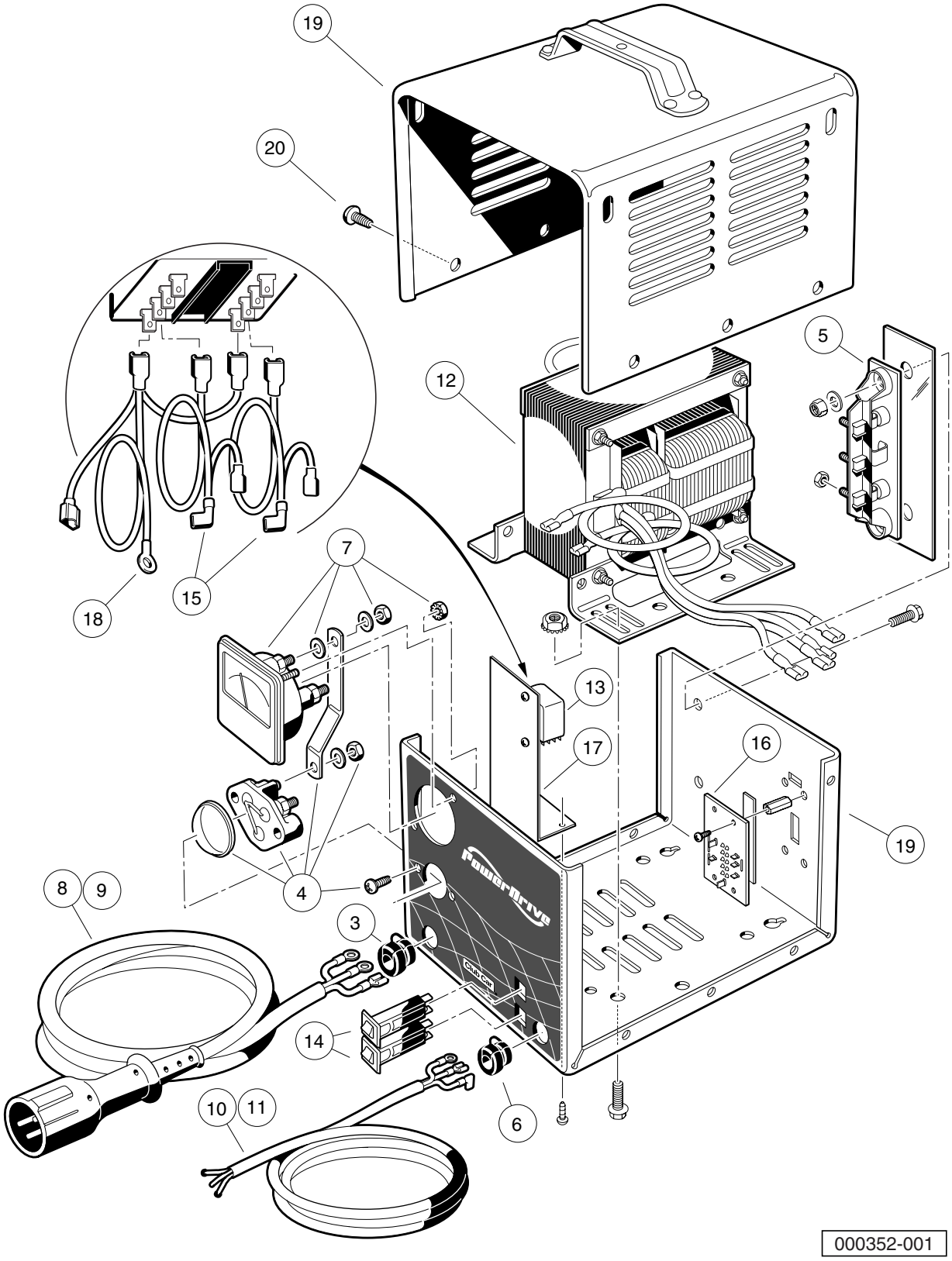
19
20
5
12
7
18
15
13
17
16
19
4
8
9
3
14
10
11
6
000352-001

POWERDRIVE BATTERY CHARGER (MODEL 18780), EXPORT

ITEM	PART NO.	DESCRIPTION	QTY
		1 2 3 4	
1	101831503	Battery Charger, 48-Volt DC (8.5-ft DC, 6-ft AC)	1
2	101831504	Battery Charger, 48-Volt DC (12-ft DC, 9-ft AC) (includes items 3 through 20)	1
3	1012098	Bushing, DC Cord	1
4	1012101	Fuse Assembly	1
5	1015914	Rectifier with Heatsink Assembly	1
6	1015917	Bushing, AC Cord	1
7	****	Ammeter	1
8	101828901	Cord, DC, 113-Inch (287 cm)	1
9	101828902	Cord, DC, 154-Inch (391 cm)	1
10	101831701	Cord, AC, 80-Inch (203 cm), without Plug	1
11	****	Cord, AC, 118-Inch (203 cm), without Plug	1
12	101838201	Transformer, Export Battery Charger	1
13	101838301	Relay, Export Charger	1
14	101838401	Circuit Breaker	2
15	101838501	Kit, Wire Assembly	1
16	101838601	Four-Position Switch	1
17	****	Mounting Bracket, Relay	1
18	101914401	Assembly, Voltage Suppressor	1
19	N/A	Case, Charger	1
20	7577	Screw, #10 X 0.50 Phillips Pan-Head	10

**** Special order item available upon request.

Note: Level 1 Battery Charger part numbers include one AC and one DC cord. They do not include all of the level 2 cords listed.

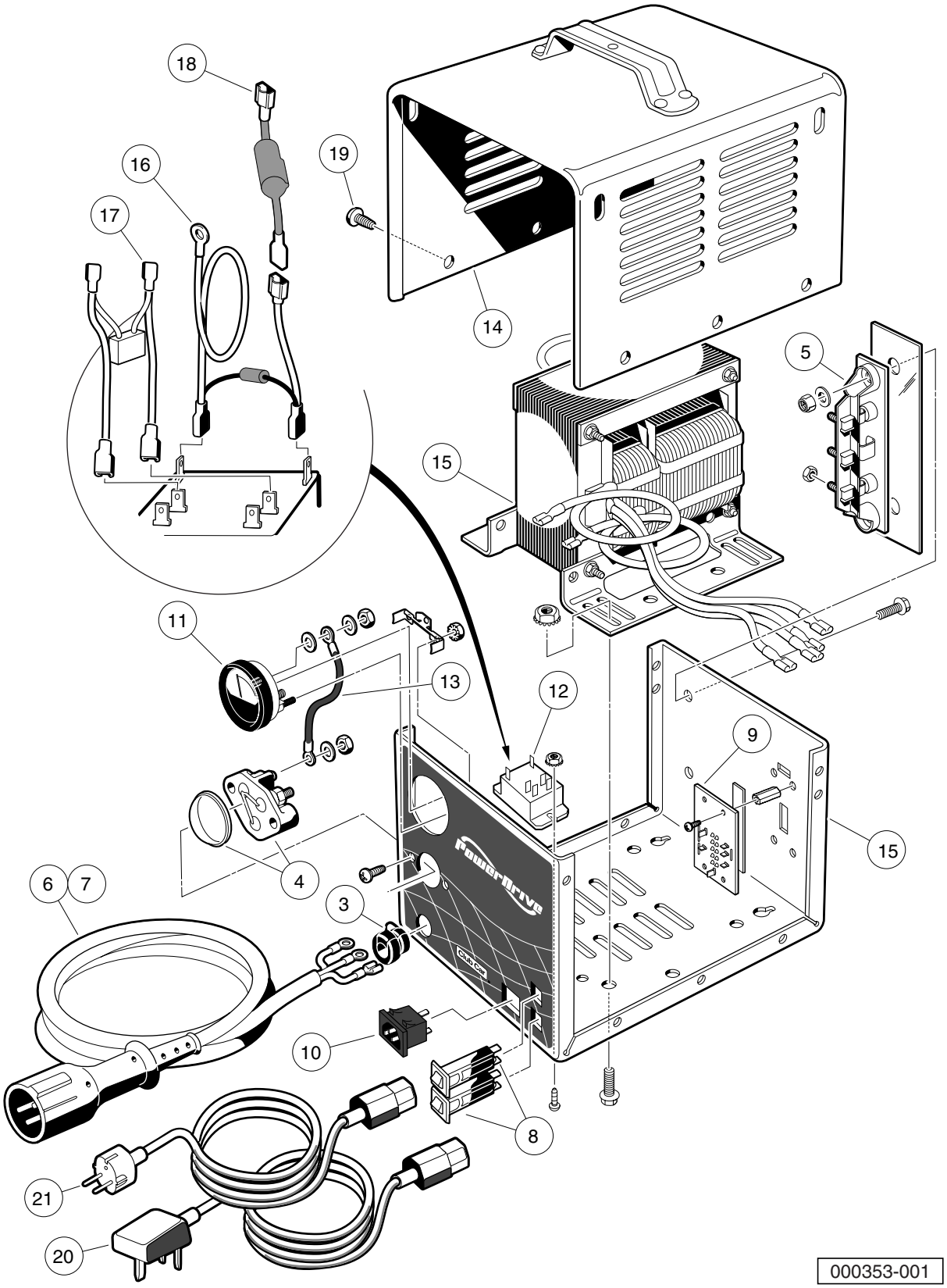
18
19
16
17
14
5
15
11
13
12
9
15
4
6
7
3
10
8
21
20
000353-001

POWERDRIVE BATTERY CHARGER (MODEL 20310), EUROPEAN

ITEM	PART NO.	DESCRIPTION	QTY
		1 2 3 4	
1	101956201	Battery Charger, 48-Volt w/ 4-Position Switch (8.5-ft DC)	1
2	101956202	Battery Charger, 48-Volt w/ 4-Pos. Switch (12-ft DC) (includes items 3 through 19)	1
3	1012098	Bushing, DC Cord	1
4	1012101	Fuse Assembly	1
5	1015914	Rectifier with Heatsink Assembly	1
6	101828901	Cord, DC, 113-Inch (287 cm)	1
7	101828902	Cord, DC, 154-Inch (391 cm)	1
8	101838401	Circuit Breaker	2
9	101838601	Four-Position Switch	1
10	101973501	Receptacle, AC Cord	1
11	101976601	Ammeter with Mounting Bracket	1
12	101987501	Relay	1
13	N/A	Wire, Jumper	1
14	N/A	Case, Charger	1
15	****	Transformer, European Battery Charger	1
16	****	Suppressor, AC Voltage	1
17	****	Assembly, Wire	1
18	****	Limiter, Current	1
19	7577	Screw, #10 X 0.50 Phillips Pan-Head	10
20	101958201	Cord, UK, AC, Battery Charger	1
21	101958301	Cord, European AC, Battery Charger	1

**** Special order item available upon request.

Note: Level 1 Battery Charger part numbers include one AC and one DC cord. They do not include all of the level 2 cords listed.

15

E

MAINTENANCE AND SERVICE TOOLS

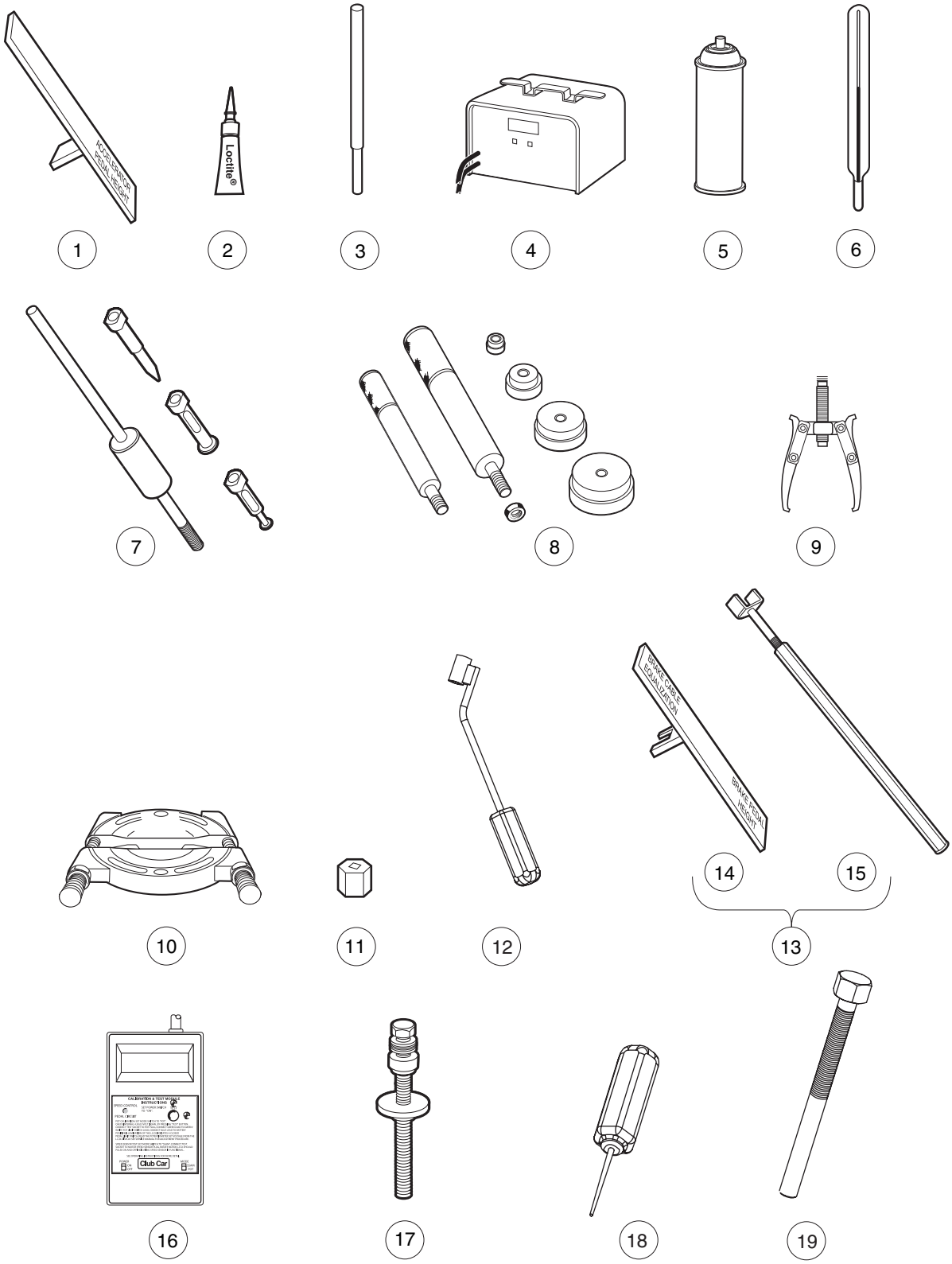
ACCELERATOR PEDAL WEIGHT
Loctite®
BRAKE CABLE EQUALIZATION
BRAKE PEDAL WEIGHT
CALIBRATION & TEST MODULE INSTRUCTIONS
Club Car
1
2
3
4
5
6
7
8
9
10
11
12
13
14
15
16
17
18
19

ITEM	PART NO.	DESCRIPTION	QTY DIESEL	QTY GAS	QTY ELEC
		1 2 3 4 The following tool list includes all tools available from Club Car for maintenance and service procedures for gasoline, electric, and/or diesel vehicles, both past and present models. Be sure to carefully examine the tool list for applicability to your vehicle before ordering.			
1	101871001	Accelerator Pedal Adjustment Tool		1	1
2	101813202	Adhesive, Guide Ring, 3-Gram Tube			1
3	101641202	Arbor		1	
4	101831901	Battery Discharge Machine, 36/48 Volt			1
5	1014305	Battery Terminal Protector Spray	1	1	1
6	1011767	Battery Thermometer	1	1	1
7	1016417	Bearing and Oil Seal Remover Assembly	1	1	1
8	1016416	Bearing Driver Set	1	1	1
9	1012811	Bearing Puller	1	1	1
10	1012812	Bearing Puller Wedge Attachment	1	1	1
11	1013582	Brake Adjustment Tool (used only on vehicles with manually adjusted mechanical brakes)		1	1
12	102555501	Brake Cable Release Tool	1	1	1
13	102249901	Brake Pedal Adjustment Tool Kit (used for the Carryall Electric Industrial Truck only) (includes items 14 and 15)			1
14	****	Brake Pedal Adjustment Tool			1
15	****	Brake Pedal Tension Tool			1
16	101887101	Calibration Test Module			1
17	101808401	Cam Installation Tool		1	
18	102562401	Charger Bezel Tool			1
19	102686101	Clutch Removal Tool (for 4x4 vehicles)	1	1	
		Please refer to the maintenance and service manual for proper tool application.			
	****	Special order item available upon request			

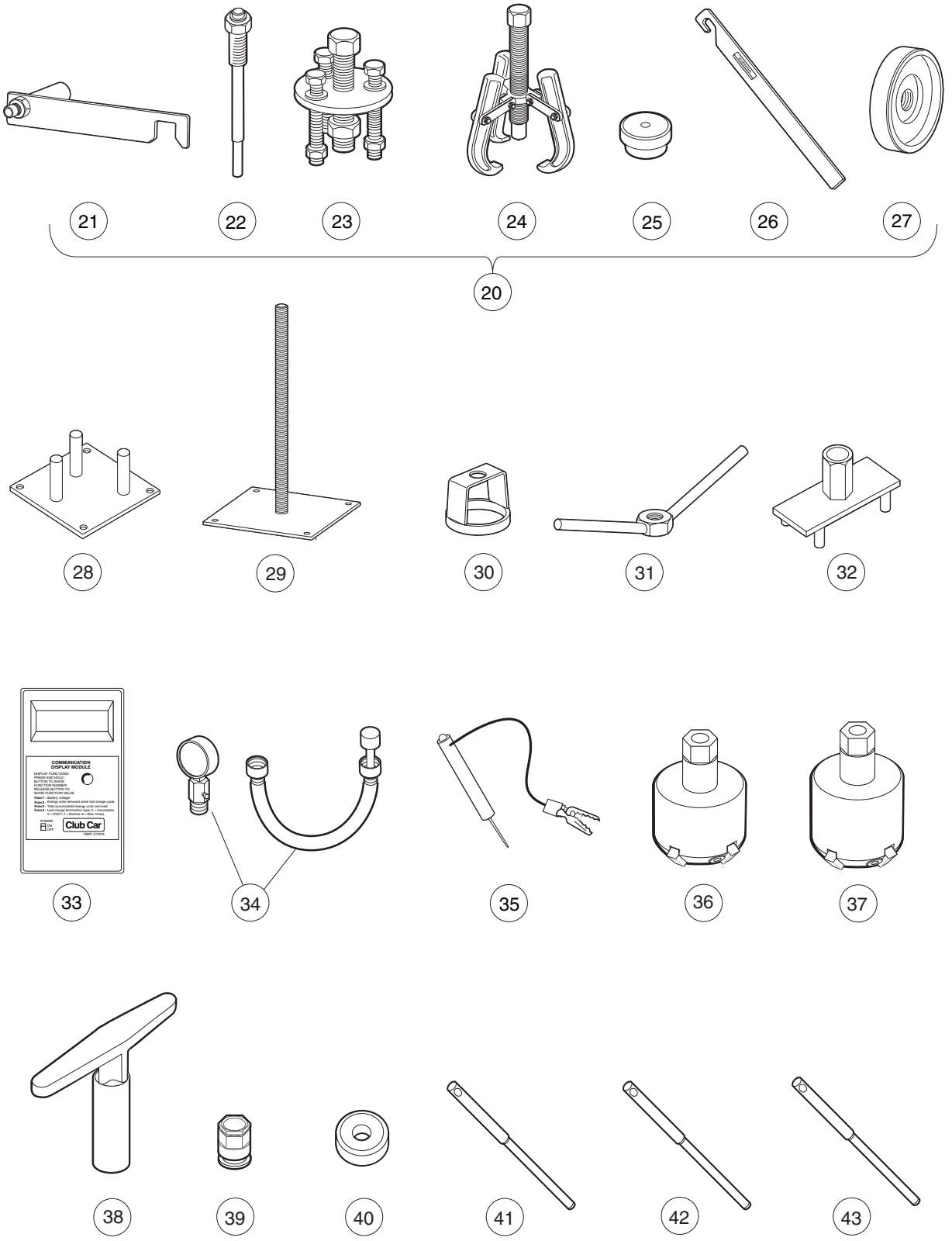
21
22
23
24
25
26
27
20
28
29
30
31
32
COMMUNICATION
DISPLAY MODULE
DISPLAY FUNCTIONS:
Pushing the
BUTTON TO SHOW
FUNCTION NUMBER.
Pushing the BUTTON
SHOW FUNCTION VALUE.
Func 1 - Battery voltage.
Func 2 - Energy units removed since last charge cycle.
Func 3 - Total accumulated energy units retrieved.
Func 4 - Current Charge Cycle Time in Hours/Minutes.
0 = OVER 2, x = Normal, 8 = Max. Inner.
POWER
ON
OFF
Club Car
PRINT 4/17/01
33
34
35
36
37
38
39
40
41
42
43

ITEM	PART NO.	DESCRIPTION	QTY DIESEL	QTY GAS	QTY ELEC
		1 2 3 4			
20	1014510	Clutch Tool Kit (includes items 21 - 27)		1	
21	1014498	Clutch Alignment Tool (for pre-unitized transaxle vehicles built prior to 1997 model year)		1	
22	1014496	Drive Clutch Puller (for Kawasaki engines only)		1	
23	1014497	Drive Clutch Hub Puller (for Kawasaki engines only)		1	
24	1014508	Driven Clutch Cam Puller (for Kawasaki engines only)		1	
25	1014507	Driven Clutch Puller Plug (for Kawasaki engines only)		1	
26	1015524	Drive Clutch Holder Tool Assembly (for Kawasaki engines only)		1	
27	101809101	Press Weldment (for Kawasaki engines only)		1	
28	102601501	Drive ClutchFixed Sheave Tool (for 4x4 vehicles)	1	1	
29	102603501	Driven Clutch Spring Compression Base (for use with items 30 and 31) (for 4x4 vehicles)	1	1	
30	102605201	Driven Clutch Spring Compression Collar (for use with items 29 and 31) (for 4x4 vehicles)	1	1	
31	102606101	Driven Clutch Spring Compression Nut (for use with items 29 and 30) (for 4x4 vehicles)	1	1	
32	102607501	Drive Clutch Spider Removal Tool (for 4x4 vehicles)	1	1	
33	101831801	Communication Display Module			1
34	101641002	Compression Gauge and Adapter		1	
35	1011273	Continuity Tester		1	1
36	102773801	Cutter, Valve Seat, #122		1	
37	102773901	Cutter, Valve Seat #115		1	
38	102774101	Wrench, T, #505		1	
39	102774101	Adapter, T-Wrench		1	
40	102675401	Cutter, Valve Seat, 60 Degree (requires item 51) (for Honda GX620 Gasoline Engines)		1	
41	102774201	Pilot, 6.6 MM		1	
42	102774301	Pilot, 6.62 MM		1	
43	102774401	Pilot, 6.65 MM		1	
		Please refer to the maintenance and service manual for proper tool application.			

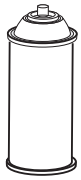

44

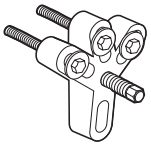

45

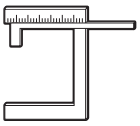

46

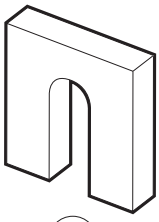

47

48

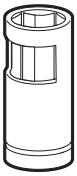

49

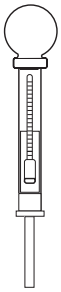

50

51

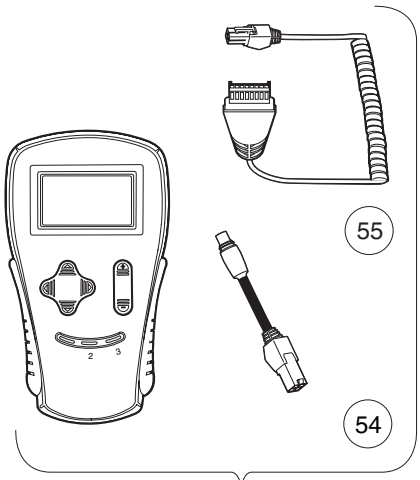

55

54

52 53

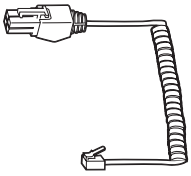

56

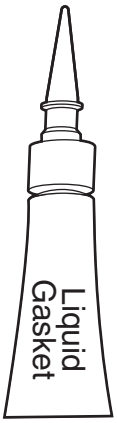

57

58

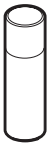

59 60

61

MAINTENANCE AND SERVICE TOOLS, CONTINUED

ITEM	PART NO.	DESCRIPTION	QTY DIESEL	QTY GAS	QTY ELEC
		1 2 3 4			
44	1012151	Dry Moly Lubricant	1	1	1
45	1016627	Flywheel Puller Kit (for Kawasaki Engines)		1	
46	102669901	Gauge, Carburetor Float Level (for Honda GX620 Gasoline Engines)		1	
47	1016418	Gear Yoke	1	1	1
48	101933101	Governor Shaft Installation Tool (for Kawasaki Engine Vehicles)		1	
49	102169401	Hydraulic Brake Adjuster (for Turf/CA 272/472, Pioneer/XRT 1200, Bobcat 2100, HUV 4213)			1
50	1011478	Hydrometer	1	1	1
51	1013593	Internal Retaining Ring Pliers	1	1	1
52	102248803	IQ Display Module (IQDM) Kit (IQ System and IQ Plus vehicles) (includes items 54 and 55)			1
53	102248804	IQ Display Module (IQDM-P) Kit (IQ System and IQ Plus vehicles) (includes items 54 and 55)			1
54	102251501	Adaptor, Cable			1
55	102241502	IQDM Series 2 Cable			1
56	102241501	IQDM Series 1 Cable (replacement)			1
57	101928701	Liquid Gasket (transaxle case)	1	1	1
58	102243402	Moly-Teflon Lubricant (4-oz. (113-gram) tube)			1
59	101997201	Paint, Touch-Up – Beige*		1	1
59	101997207	Paint, Touch-Up – Black*		1	1
59	101997212	Paint, Touch-Up – Burgundy*		1	1
59	101997211	Paint, Touch-Up – Classic Blue (Navy)*		1	1
59	101997205	Paint, Touch-Up – Dark Gray*	1	1	1
59	101997209	Paint, Touch-Up – Dark Green*	1	1	1
59	101997204	Paint, Touch-Up – Gray*	1	1	1
59	101997203	Paint, Touch-Up – Red*	1	1	1
59	101997206	Paint, Touch-Up – Royal Blue (Pacific Blue)*		1	1
59	101997202	Paint, Touch-Up – White*	1	1	1
60	102562301	Paint, Precedent Underbody – Gray		1	1
61	102587201	Paint Pen, Touch-Up, Precedent Underbody – Black		1	1

Please refer to the maintenance and service manual for proper tool application.

* Item 59 is not for use on Surlyn® body material, which is used on Precedent vehicles.

62

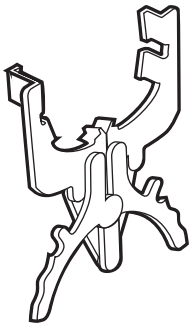

63

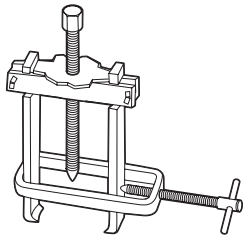

64

65

66

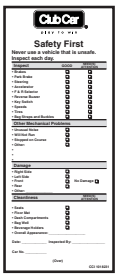

Club Car
READY TO PAY

Safety First

Never use a vehicle that is unsafe.

Inspect each day.

Inspect	Before Operation	After Operation
• Brakes	☐	☐
• Steering	☐	☐
• Accelerator	☐	☐
• F & R Sensors	☐	☐
• Seat Belt Sensor	☐	☐
• Key Switch	☐	☐
• Speedometer	☐	☐
• Horn	☐	☐
• Seat Screws and Bushes	☐	☐
Other Mechanical Problems		
• Unusual Noise	☐	
• Wobble Rear	☐	
• Stopped on Course	☐	
• Other:	☐	
•		
•		
Damage		
• Right Side	☐	
• Left Side	☐	No Damage ☐
• Front	☐	
• Rear	☐	
• Other:		
Cleanliness	**BEFORE OPERATION**	
• Seats	☐	
• Floor Mat	☐	
• Dash Compartments	☐	
• Cup Holder	☐	
• Rectangle Holders	☐	
• Overall Appearance	☐	

Date: _____ Inspected By: _____

Car No: _____

(Over)

CC-101420

67

68

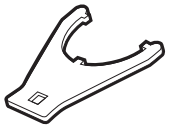

69

70

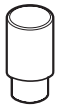

71

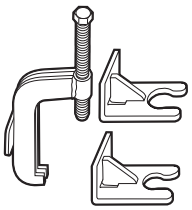

72

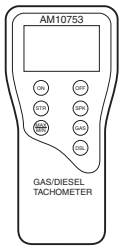

73

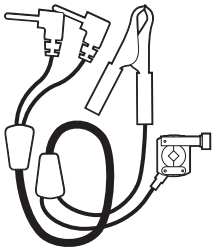

74

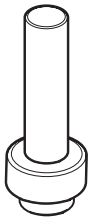

75

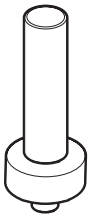

76

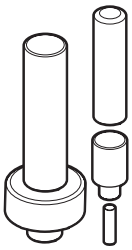

77

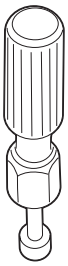

83

84

85

86

ITEM	PART NO.	DESCRIPTION	QTY DIESEL	QTY GAS	QTY ELEC
		1 2 3 4			
62	1016414	Piston Ring Compressor Kit (FE290, FE350 and FE400 engines)		1	
63	1016415	Piston Ring Pliers (for Kawasaki Engines)		1	
64	102668801	Puller, Special Use (for Kubota D722 Diesel Engines)	1		
65	1012549	Retaining Ring Pliers, 45° External	1	1	1
66	1012560	Retaining Ring Pliers, 90° Internal	1	1	1
67	101823101	Safety First Card (50 per pack)	1	1	1
68	1012809	Seal Puller	1	1	1
69	102330901	Spanner Wrench (for coil over shock front suspension vehicles only)	1	1	
70	1014264	Steering Column Bearing Press Tool		1	1
71	1014259	Steering Column Retaining Ring Tool		1	1
72	102061201	Steering Wheel Puller Tool	1	1	1
73	AM10753	Tachometer (includes gasoline engine pick up lead only)	1	1	
74	AM10771	Tachometer Diesel Probe (for use with item 73)	1		
75	1014162	Transaxle Axle Seal Tool		1	
76	1014161	Transaxle Pinion Seal Tool		1	
77	1014115	Transmission Tool Kit		1	
78	101611003	Tune-Up Kit, All OHV (for FE290, FE350, FE400 only) (includes air filter, spark plug, oil filter, fuel filters) (not shown)		1	
79	AM11804	Tune-Up Kit, Gx620 (for Honda Engines) (includes air filter, spark plug, oil filter, fuel filters) (not shown)		1	
80	AM11805	Tune-Up Kit, D722 (for Kubota Engines) (includes air filter, oil filter, fuel filters, water separator filter) (not shown)	1		
81	AM1220301	Tune-Up Kit, Precedent (for FE290/350 Engines) (includes air filter, spark plug, oil filter, fuel filters) (not shown)		1	
82	AM1232401	Tune-Up Kit, FH680D (for Kawasaki V-Twin Engines) (includes oil filter, fuel filter, air filter, and spark plugs) (not shown)		1	
83	1016413	Valve Clearance Adjuster Screw Holder (for FE290 engines only)		1	
84	102674601	Valve Guide Driver (for Honda GX620 Gasoline Engines)		1	
85	101641201	Valve Guide Reamer (FE290, FE350, and FE400 only)		1	
86	102674401	Valve Guide Reamer, 6.6 mm (for Honda GX620 Gasoline Engines)		1	

87

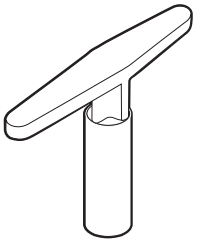

88

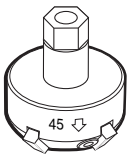

89

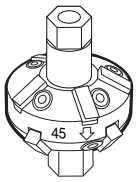

90

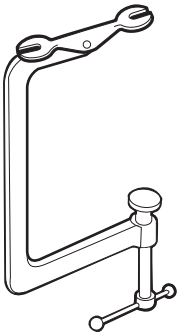

91

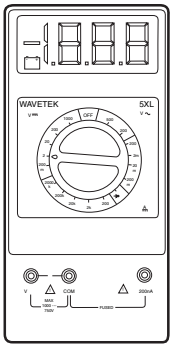

92

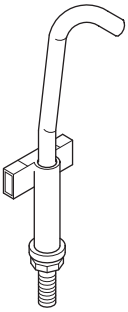

93

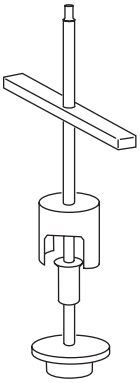

94

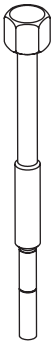

95

MAINTENANCE AND SERVICE TOOLS, CONTINUED

ITEM	PART NO.	DESCRIPTION	QTY DIESEL	QTY GAS	QTY ELEC
		1 2 3 4			
87	1016552	Valve Seat Cutter Guide		1	
88	1016551	Valve Seat Cutter T-Wrench		1	
89	1016553	Valve Seat Cutter, 45° (32 mm diameter) (for FE290 engines only)		1	
90	1016554	Valve Seat Cutter, 45°/30° (35 mm diameter)		1	
91	101641101	Valve Spring Compressor		1	
92	1011480	Volt Ohm Meter	1	1	1
93	102570401	Tool, Tensioning, Starter Generator (For Precedent vehicles)		1	
94	103601401	Puller, Drive Clutch, XRT 950		1	
95	103601701	Tool, Disassembly, Driven Clutch, XRT 950		1	

INDEX

Part Number and *Page*

AM10753 *16-9*
AM10771 *16-9*
AM10079 *6-3*, *12-3*
AM10080 *11-5*
AM10081 *11-5*
AM10419 *10-7*
AM10724 *7-5*
AM1229401 *5-3*
CCX8506 *15-3*, *15-5*, *15-7*
183 *10-3*, *11-3*
332 *9-3*
334 *7-15*
451 *9-3*, *13-3*, *13-5*, *13-7*
705 *7-15*
706 *5-11*
808 *10-3*, *12-27*
1241 *6-17*, *9-3*, *13-3*
1242 *4-7*, *4-9*, *6-5*, *6-17*
1624 *6-17*
7174 *6-17*, *8-9*, *9-3*, *13-3*, *13-5*, *13-7*
7310 *2-3*, *2-5*
7330 *11-7*, *14-3*
7335 *11-5*, *14-3*
7336 *14-3*
7577 *15-5*, *15-7*, *15-9*, *15-11*
7847 *9-3*
7893 *6-5*
8057 *11-9*
8058 *11-9*
8233 *11-3*
8450 *10-3*
8639 *12-31*, *12-33*, *12-35*, *12-37*
8717 *11-3*, *11-9*
8745 *5-11*
8754 *6-17*, *12-27*
1010145 *5-13*, *5-15*, *5-17*
1010434 *1-7*, *1-11*, *1-19*, *1-29*, *1-31*, *1-33*, *1-35*, *1-37*, *4-7*, *4-9*, *12-35*, *12-37*
1010577 *7-15*
1010829 *4-5*
1010850 *4-3*
1010934 *13-3*, *13-5*, *13-7*
1010954 *11-9*
1010958 *12-31*, *12-33*, *12-35*, *12-37*
1010984 *2-3*
1011273 *16-5*
1011280 *13-3*
1011291 *11-7*
1011411 *13-3*
1011415 *5-13*, *5-15*, *5-17*
1011466 *4-3*
1011478 *16-7*
1011480 *16-11*
1011697 *5-3*, *7-15*, *8-7*, *8-9*
1011767 *16-3*
1012030 *5-11*
1012098 *15-3*, *15-5*, *15-7*, *15-9*, *15-11*
1012101 *15-7*, *15-9*, *15-11*
1012151 *16-7*
1012180 *5-13*, *5-15*
1012181 *5-13*, *5-15*, *5-17*
1012182 *5-13*, *5-15*, *5-17*
1012285 *8-9*
1012295 *6-5*
1012328 *6-5*
1012431 *11-9*
1012505 *6-3*, *12-3*
1012528 *9-3*, *12-39*, *12-41*, *12-43*
1012549 *16-9*
1012560 *16-9*
1012565 *5-3*, *5-5*
1012566 *5-3*, *5-5*
1012571 *1-21*, *7-15*
1012594 *11-9*
1012649 *8-3*
1012711 *11-3*
1012714 *11-5*
1012740 *11-5*
1012741 *11-5*
1012747 *11-5*
1012748 *11-5*
1012752 *11-3*
1012809 *16-9*
1012811 *16-3*
1012812 *16-3*
1012830 *6-17*, *8-9*, *9-3*
1012836 *10-7*
1012896 *11-3*
1012987 *11-9*
1013001 *6-15*
1013003 *6-15*
1013005 *6-15*
101301102 *6-15*
1013061 *11-3*
1013357 *12-27*
1013582 *16-3*
1013589 *11-9*
1013590 *11-9*
1013591 *11-9*
1013593 *16-7*
1013609 *6-5*
1013687 *8-3*
1013700 *8-9*
1013734 *9-3*, *12-39*, *12-41*, *12-43*
1013746 *8-3*, *8-7*
1013760 *11-3*
1013768 *11-7*
1013769 *11-7*
1013770 *11-7*
1013771 *11-7*
1013772 *11-7*
1013773 *11-7*
1013774 *11-7*
1013787 *11-7*
1013792 *11-7*
1013794 *11-7*, *14-3*
1013924 *4-3*, *7-15*
1014007 *11-3*
1014049 *10-3*
1014050 *10-3*
1014051 *10-3*
1014052 *10-3*
1014055 *10-3*
1014056 *10-3*
1014057 *10-3*
1014058 *10-3*
1014059 *10-3*
1014062 *10-3*
1014063 *10-3*
1014065 *10-3*, *11-9*
1014070 *10-7*
1014072 *10-7*
1014078 *10-7*
1014080 *10-7*
1014089 *11-9*
1014115 *16-9*
1014145 *11-9*
1014153 *4-3*
1014161 *16-9*
1014162 *16-9*
1014201 *13-3*, *13-5*, *13-7*
1014207 *11-7*
1014259 *16-9*
1014264 *16-9*
1014287 *10-3*
1014288 *10-3*
1014289 *6-15*
1014304 *12-27*, *12-29*, *12-31*, *12-33*, *12-35*, *12-37*
1014305 *16-3*
1014375 *6-5*
1014413 *1-13*, *8-11*
1014453 *10-3*
1014454 *10-7*
1014496 *16-5*
1014497 *16-5*
1014498 *16-5*
1014507 *16-5*
1014508 *16-5*
1014510 *16-5*
1014523 *8-3*
1014524 *8-3*
1014555 *5-13*, *5-15*, *5-17*, *12-29*, *12-31*, *12-33*, *12-35*, *12-37*
1014727 *11-9*
1014807 *11-9*
1014902 *1-33*, *1-35*, *1-37*, *5-17*

INDEX

1014947 *12-41*, *12-43*
1015064 *11-9*
1015137 *8-3*, *8-7*
1015139 *8-3*
1015143 *8-3*
101524002 *6-17*
1015332 *7-3*
1015524 *16-5*
1015649 *7-3*
1015814 *9-3*
101584502 *8-9*
1015914 *15-3*, *15-7*, *15-9*, *15-11*
1015917 *15-7*, *15-9*
1015932 *6-17*
1015969 *7-3*
1016074 *6-17*
1016103 *8-7*
101611003 *16-9*
1016154 *5-3*, *5-5*
101615602 *5-5*
1016201 *10-3*
1016203 *10-5*
1016214 *5-3*, *5-5*
1016219 *5-5*
1016289 *10-3*
1016337 *11-5*
1016338 *11-5*
101641002 *16-5*
101641101 *16-11*
101641201 *16-9*
101641202 *16-3*
1016413 *16-9*
1016414 *16-9*
1016415 *16-9*
1016416 *16-3*
1016417 *16-3*
1016418 *16-7*
101642575 *8-5*
101642578 *8-5*
101642580 *8-5*
101642582 *8-5*
101642585 *8-5*
1016429 *7-7*
1016432 *7-7*, *11-3*
1016436 *7-9*
1016437 *8-5*
1016438 *8-7*
1016440 *7-9*, *8-7*
1016441 *8-7*
1016444 *8-7*
1016445 *7-5*
1016449 *7-9*
1016450 *7-9*
1016452 *7-9*
1016454 *7-11*
1016455 *7-5*
1016456 *7-3*, *7-5*
1016457 *7-7*
1016458 *7-9*
1016467 *7-7*
1016470 *7-13*
1016472 *7-11*
1016473 *7-7*
1016474 *7-9*
1016479 *7-9*
1016480 *8-7*
101648102 *8-7*
101648203 *7-7*
1016483 *7-9*
1016486 *8-5*
1016489 *7-9*
101649002 *8-7*
1016494 *7-11*
1016496 *7-11*
1016497 *7-5*
1016499 *8-5*
1016501 *8-5*
1016502 *7-7*
1016506 *7-11*
1016507 *7-3*
1016510 *7-11*
1016513 *11-3*
1016517 *7-9*
1016518 *7-9*
1016519 *7-9*
1016521 *7-11*
1016531 *7-3*
1016535 *7-11*
1016537 *7-7*
1016538 *7-11*
1016539 *7-3*
1016541 *7-13*
1016544 *7-5*, *7-9*, *7-11*
1016546 *8-9*
1016547 *7-3*, *7-13*, *8-7*
1016549 *7-9*
1016551 *16-11*
1016552 *16-11*
1016553 *16-11*
1016554 *16-11*
1016560 *7-9*
1016561 *7-5*
1016562 *7-5*, *7-13*
1016563 *7-9*
1016564 *7-11*
1016566 *7-9*
1016569 *7-9*
1016570 *7-7*
1016571 *7-13*
1016572 *8-7*
1016576 *7-7*
1016578 *7-5*
1016579 *7-5*
1016581 *7-7*
1016582 *8-7*
1016583 *7-9*
1016584 *7-11*
1016585 *8-5*
1016586 *7-5*
1016587 *7-5*
1016588 *7-5*
1016627 *16-7*
1016630 *6-3*
1016663 *5-5*
1016672 *11-7*
1016801 *10-3*
1016849 *6-3*, *12-3*
1016851 *6-3*, *12-3*
1016883 *6-17*
1016904 *7-9*, *9-3*
101705701 *1-33*, *1-35*, *1-37*, *3-11*
1017082 *11-3*
1017231 *11-3*
1017235 *1-33*, *1-35*, *1-37*, *5-17*
1017434 *7-9*
1017435 *7-9*
1017442 *7-7*
1017443 *7-9*, *7-11*
1017444 *7-9*
1017445 *7-9*
1017446 *7-9*
1017447 *7-11*
1017448 *7-5*
101744901 *7-13*
101744902 *7-13*
1017450 *7-13*
101745101 *7-13*
101745102 *7-13*
1017453 *7-13*
1017454 *7-9*
1017455 *7-5*
1017456 *7-7*
101745701 *7-13*
101745702 *7-13*
1017458 *7-7*
1017460 *7-7*
1017461 *8-5*
1017463 *7-5*
1017466 *8-7*
1017468 *7-5*
1017471 *7-13*
1017472 *7-11*
1017473 *7-9*
1017474 *7-3*
1017475 *7-3*
1017476 *7-3*
1017486 *7-3*
1017487 *7-11*

INDEX

1017490 *7-5*
1017500 *7-3*
1017501 *7-13*
1017502 *7-13*
1017503 *7-13*
1017504 *7-11*
1017507 *7-7*
1017508 *7-11*
1017510 *7-13*
1017512 *7-13*
1017513 *7-11*
1017514 *7-11*
101751801 *7-11*
101751802 *7-11*
101751803 *7-11*
1017686 *10-7*
1017689 *9-3*
101769302 *2-3*
101773301 *7-13*
101773302 *7-13*
101773303 *7-13*
101773304 *7-13*
101773305 *7-13*
101773306 *7-13*
101773307 *7-13*
101773308 *7-13*
101773309 *7-13*
101773310 *7-13*
101773311 *7-13*
101791101 *4-3*
1017944 *13-3*
1017947 *13-3*
1017949 *13-3*
1017950 *13-3*
1017953 *13-3*
101795701 *12-29*, *12-31*, *12-33*, *12-35*, *12-37*
101797701 *12-31*, *12-35*
101797801 *12-31*, *12-33*, *12-35*, *12-37*
101802201 *15-7*
101802202 *15-7*
101802203 *15-7*
101808401 *16-3*
101809101 *16-5*
101811401 *1-13*, *8-11*
101813202 *16-3*
101815501 *4-3*
101815502 *4-3*
101816301 *4-3*
101816501 *4-3*
101816502 *4-3*
101820201 *8-7*
101823101 *16-9*
101823201 *4-3*
101823301 *4-3*
101823302 *4-3*
101823801 *4-3*
101823901 *4-3*
101824001 *4-3*
101824002 *4-3*
101824401 *8-3*
101825101 *3-3*, *3-5*
101827101 *7-15*
101828301 *15-7*
101828801 *15-5*, *15-7*
101828802 *15-5*, *15-7*
101828901 *15-7*, *15-9*, *15-11*
101828902 *15-7*, *15-9*, *15-11*
101828903 *15-7*
101828904 *15-5*
101828905 *15-5*
101828906 *15-5*
101830701 *6-3*, *12-3*
101831101 *15-7*
101831401 *12-27*, *12-29*
101831503 *15-9*
101831504 *15-9*
101831701 *15-9*
101831801 *16-5*
101831901 *16-3*
101832001 *12-29*, *12-31*, *12-33*, *12-35*, *12-37*
101832202 *8-9*
101832302 *8-9*
101832601 *7-15*
101832701 *7-15*
101833101 *7-15*
101833401 *10-7*
101833601 *11-3*
101833701 *6-15*
101833902 *10-3*
101834001 *10-7*
101834502 *6-3*, *12-3*
101834601 *7-15*
101834801 *11-3*
101836201 *10-7*
101837301 *6-17*
101838201 *15-9*
101838301 *15-9*
101838401 *15-9*, *15-11*
101838501 *15-9*
101838601 *15-9*, *15-11*
101851101 *6-3*, *12-3*
101856001 *12-17*, *12-19*
101856201 *1-13*, *8-11*
101865805 *12-35*, *12-37*
101869302 *6-15*
101871001 *16-3*
101874901 *6-15*
101875001 *6-15*
101875102 *6-15*
101875201 *6-15*
101875301 *6-15*
101875401 *6-15*
101875501 *6-15*
101875601 *6-15*
101875701 *6-15*
101875802 *6-15*
101876001 *6-15*
101876202 *6-15*
101876301 *6-15*
101876402 *6-15*
101876501 *6-15*
101877601 *6-15*
101877701 *6-15*
101878101 *6-15*
101879001 *6-15*
101881101 *7-5*
101884801 *7-15*
101886101 *11-3*
101887101 *16-3*
101887601 *7-3*, *8-7*
101889401 *11-5*
101890001 *11-5*
101890101 *11-3*
101890201 *11-3*
101890501 *11-3*
101890601 *11-3*
101890901 *11-7*
101891001 *11-7*
101891301 *11-3*
101891401 *11-7*
101891501 *11-7*
101891601 *11-5*
101891901 *11-5*
101892001 *11-5*
101892201 *11-5*
101892301 *11-5*
101892401 *11-5*
101892501 *11-5*
101892601 *11-5*
101892701 *11-7*
101892901 *11-3*
101893201 *11-5*
101893801 *11-3*
101893901 *11-5*
101895401 *14-3*
101895501 *14-3*
101896501 *6-15*
101897001 *14-3*
101897201 *14-3*
101897401 *14-3*
101897601 *14-3*
101898001 *6-5*
101903601 *14-3*
101903701 *14-3*
101905901 *8-5*
101906901 *14-3*
101908401 *12-17*, *12-19*
101908701 *12-39*, *12-41*, *12-43*

INDEX

101909201 *7-5*
101909301 *7-5*
101909401 *7-5*
101910501 *11-7*
101914401 *15-7*, *15-9*
101916001 *7-13*
101916101 *7-3*
101916201 *7-5*
101916301 *7-5*
101916701 *6-17*, *10-3*
101920101 *13-3*, *13-5*, *13-7*
101922101 *14-3*
101922201 *14-3*
101923001 *14-3*
101923201 *14-3*
101923501 *14-3*
101923701 *14-3*
101923901 *14-3*
101926901 *11-3*
101927101 *11-3*
101927201 *11-3*
101927301 *11-3*
101927501 *11-5*
101927601 *11-5*
101927701 *11-5*
101927901 *11-5*
101928001 *11-5*
101928101 *11-5*
101928301 *11-7*
101928601 *11-3*
101928701 *11-3*, *14-3*, *16-7*
101929802 *10-3*
101933101 *16-7*
101939901 *6-15*
101942301 *13-3*, *13-5*, *13-7*
101953802 *7-3*
101956201 *15-11*
101956202 *15-11*
101956503 *12-39*
101958201 *15-11*
101958301 *15-11*
101960501 *3-3*
101963401 *7-15*
101964201 *12-33*, *12-37*
101972001 *16-7*
101972002 *16-7*
101972003 *16-7*
101972004 *16-7*
101972005 *16-7*
101972006 *16-7*
101972007 *16-7*
101972009 *16-7*
101972011 *16-7*
101972012 *16-7*
101972101 *14-3*
101972201 *14-3*
101973101 *8-5*
101973301 *8-5*
101973401 *8-7*
101973501 *15-11*
101976601 *15-11*
101979101 *11-9*
101980801 *11-5*
101980901 *11-5*
101981001 *11-5*
101987501 *15-11*
102003201 *8-3*
102022601 *5-19*
102031901 *11-7*
102061201 *16-9*
102065901 *7-15*
102169401 *16-7*
102186001 *13-5*, *13-7*
102186101 *13-5*, *13-7*
102186201 *13-5*, *13-7*
102186301 *13-5*, *13-7*
102186401 *13-5*, *13-7*
102186701 *13-5*, *13-7*
102186901 *13-5*, *13-7*
102187001 *13-5*, *13-7*
102187101 *13-5*, *13-7*
102187201 *13-5*, *13-7*
102196901 *12-3*
102223401 *12-3*
102235201 *13-3*, *13-5*, *13-7*
102240501 *12-39*, *12-41*, *12-43*
102241501 *16-7*
102241502 *16-7*
102242101 *10-7*
102243402 *16-7*
102243403 *13-3*, *13-5*, *13-7*
102248803 *16-7*
102249901 *16-3*
102251501 *16-7*
102265601 *13-3*
102265701 *13-3*
102265901 *13-3*
102266001 *13-3*
102266101 *13-3*
102267001 *13-3*
102273201 *15-5*
102273301 *15-5*
102273401 *15-5*
102273501 *15-5*
102273601 *15-5*
102273701 *15-3*, *15-5*
102273801 *15-3*, *15-5*
102273901 *15-3*, *15-5*
102274001 *15-5*
102279001 *1-21*
102279103 *1-21*
102279104 *1-21*
102287101 *5-9*
102287201 *5-11*
102287601 *5-9*
102287701 *5-9*
102287901 *5-11*
102288101 *5-9*, *5-11*
102288201 *5-11*
102288401 *5-11*
102288601 *5-19*
102288901 *5-9*
102289001 *5-19*
102289101 *5-11*
102289201 *5-11*, *5-19*
102289401 *5-9*
102289501 *5-9*, *5-11*
102289601 *5-9*
102289701 *5-9*
102289801 *5-11*
102289901 *5-9*
102290120 *5-7*
102292201 *4-7*, *4-9*
102292356 *1-7*, *1-9*, *1-11*, *12-29*, *12-31*, *12-33*, *12-35*, *12-37*
102292701 *1-11*, *1-21*
102292801 *4-5*
102293512 *12-27*
102295916 *1-9*
102296020 *1-5*, *5-3*, *6-5*, *8-3*, *8-11*
102296040 *6-5*, *11-9*
102296140 *1-25*, *1-27*
102296401 *1-25*, *1-27*
102296530 *1-19*, *1-29*, *1-33*, *1-35*, *1-37*
102296601 *1-11*, *1-21*
102296716 *12-17*, *12-39*, *12-41*, *12-43*
102296819 *1-7*, *1-9*
102296920 *1-11*, *11-9*, *12-17*, *12-19*
102297001 *1-9*
102297125 *1-19*, *8-11*
102297230 *1-21*
102297901 *4-7*, *4-9*
102298020 *1-11*, *12-29*, *12-31*, *12-33*, *12-35*, *12-37*, *12-41*, *12-43*
102298030 *1-13*, *1-15*, *1-21*, *1-29*, *4-7*, *4-9*
102298116 *5-7*
102298130 *5-7*
102298170 *5-13*, *5-15*, *5-17*
102298185 *5-13*, *5-15*, *5-17*
102298240 *1-19*, *1-21*, *1-29*
102298401 *1-3*, *1-25*, *1-27*, *5-13*, *5-15*, *5-17*
102298580 *1-21*
102298601 *1-21*
102298716 *1-11*, *1-21*
102298720 *1-29*, *1-31*, *1-33*, *1-35*, *1-37*
102298745 *1-31*, *1-33*, *1-35*, *1-37*
102298770 *12-27*
102299065 *1-23*, *1-25*, *1-27*

INDEX

102299360 *1-25, 1-27*
102299601 *1-25, 1-27*
102302504 *1-11*
102302604 *1-11*
102304801 *7-9*
102330901 *16-9*
102336001 *8-9*
102353201 *5-11*
102353301 *5-11*
102353401 *5-11*
102355301 *6-5*
102356601 *14-3*
102356801 *14-3*
102357001 *14-3*
102357701 *5-11*
102380401 *1-7*
102400002 *1-25, 1-27*
102400102 *1-25, 1-27*
102400202 *1-23*
102400302 *1-23*
102430901 *7-13*
102431001 *7-11*
102453001 *11-5*
102453101 *11-5*
102491501 *12-29, 12-31, 12-33, 12-35, 12-37*
102500501 *1-21*
102500601 *1-21*
102500801 *4-7, 4-9*
102501401 *1-21*
102501402 *1-21*
102501501 *1-5*
102502301 *1-21*
102502302 *1-21*
102502304 *1-21*
102502305 *1-21*
102502306 *1-21*
102502307 *1-21*
102502308 *1-21*
102502309 *1-21*
102502311 *1-21*
102502313 *1-21*
102502401 *1-5*
102502402 *1-5*
102502404 *1-5*
102502405 *1-5*
102502406 *1-5*
102502407 *1-5*
102502408 *1-5*
102502409 *1-5*
102502411 *1-5*
102502413 *1-5*
102502501 *1-5*
102502601 *1-5*
102502901 *1-21*
102503001 *1-21*
102503221 *1-19, 1-29, 1-33*
102503222 *1-19, 1-29, 1-35*
102503224 *1-19, 1-29, 1-37*
102503225 *1-19, 1-29*
102503901 *1-19*
102504001 *1-19*
102504201 *1-19*
102504301 *1-19*
102504501 *1-19*
102504802 *1-11*
102505701 *5-9*
102506201 *5-13, 5-15, 5-17*
102506301 *5-13, 5-15, 5-17*
102506401 *5-13, 5-15, 5-17*
102506601 *5-13, 5-15, 5-17*
102508201 *1-15*
102508202 *1-15*
102508401 *12-17, 12-19*
102508601 *12-3*
102508701 *12-3*
102508901 *1-27*
102508902 *1-25*
102509301 *5-15*
102509701 *12-27*
102509801 *12-27*
102510001 *12-3*
102510101 *12-7*
102510201 *12-27*
102510601 *12-27*
102510802 *12-39*
102510901 *12-17*
102511101 *12-17, 12-19*
102511301 *12-27, 12-29*
102511302 *12-27, 12-29*
102511601 *1-27*
102511602 *1-25*
102511701 *1-13*
102511702 *1-13*
102511801 *1-13*
102511802 *1-13*
102512001 *11-9*
102512401 *1-25, 1-27*
102513001 *5-13*
102513102 *4-7, 8-9*
102513301 *1-25, 1-27*
102513501 *1-25, 1-27*
102513701 *8-3*
102514201 *8-3*
102514401 *1-13, 8-11*
102514601 *11-9*
102515001 *6-3, 6-13*
102515101 *6-3*
102515301 *11-9*
102515401 *11-3*
102515501 *11-9*
102515601 *11-9*
102516901 *1-15*
102517001 *1-19*
102517801 *3-3*
102517901 *3-3*
102518001 *3-5*
102518101 *3-7*
102518301 *3-7*
102519201 *3-3*
102519301 *3-3, 3-5*
102519401 *3-7*
102520001 *12-17*
102520701 *1-27*
102520702 *1-25*
102521301 *8-11*
102521401 *8-11*
102521801 *1-9*
102521901 *1-11*
102522601 *2-3, 2-5*
102522604 *2-3*
102522605 *2-3*
102522609 *2-3, 2-5*
102522701 *12-39*
102522901 *6-3, 12-3*
102523101 *1-7*
102523901 *1-11*
102524201 *1-27*
102524202 *1-25*
102526201 *11-3*
102526401 *12-27*
102526801 *12-27*
102527501 *3-7*
102531001 *1-31, 1-33, 1-35, 1-37*
102531402 *1-31, 1-33, 1-35, 1-37*
102531501 *1-29, 1-33, 1-35, 1-37*
102531601 *1-31, 1-33, 1-35, 1-37*
102531701 *1-29, 1-33*
102531702 *1-29, 1-35*
102531704 *1-29, 1-37*
102534001 *12-27, 12-29*
102534201 *1-3, 1-31, 1-33, 1-35, 1-37*
102534403 *1-5*
102534404 *1-5*
102534801 *1-33, 1-35, 1-37, 5-17*
102536601 *6-3, 12-3*
102536602 *6-3*
102536603 *12-3*
102536604 *6-3*
102536605 *12-3*
102538101 *3-3, 5-3*
102538201 *5-3*
102538601 *12-17, 12-19*
102540301 *7-15*
102540601 *2-5*
102540701 *2-5*
102540801 *5-3*
102540901 *3-3*
102541425 *1-29, 1-33, 1-35, 1-37*

INDEX

102543901 *1-23*
102543902 *1-23*
102544201 *1-23*, *1-25*, *1-27*
102544901 *1-33*, *1-35*, *1-37*, *5-17*
102545601 *1-21*
102545602 *1-21*
102550301 *12-7*
102551701 *1-19*
102551901 *4-7*, *4-9*
102552001 *4-7*, *4-9*
102554601 *1-17*
102554901 *11-9*
102555501 *16-3*
102555901 *3-5*
102556701 *2-5*
102556801 *2-5*
102557201 *1-7*, *1-9*
102557801 *2-3*, *2-5*
102558201 *8-11*
102558301 *8-11*
102558401 *8-11*
102558501 *8-11*
102558601 *8-11*
102558701 *8-11*
102558801 *4-11*, *4-13*
102558901 *4-11*, *4-13*
102559001 *4-11*, *4-13*
102559101 *4-11*, *4-13*
102559301 *4-11*, *4-13*
102559401 *4-11*, *4-13*
102559601 *4-11*, *4-13*
102559701 *4-11*, *4-13*
102562101 *1-21*
102562401 *16-3*
102562701 *1-17*
102562801 *1-17*
102562901 *1-17*
102563001 *4-11*, *4-13*
102563101 *4-11*, *4-13*
102564901 *5-19*
102565101 *5-19*
102565201 *5-19*
102565301 *5-19*
102565401 *5-19*
102565701 *5-19*
102565801 *5-19*
102565901 *5-19*
102566001 *5-19*
102566101 *5-19*
102568701 *1-19*
102569304 *2-3*
102569309 *2-3*, *2-5*
102570401 *16-11*
102570901 *1-33*
102570902 *1-35*
102570904 *1-37*
102571101 *12-35*, *12-37*
102571202 *12-35*, *12-37*
102571301 *5-3*
102571901 *12-35*, *12-37*
102572201 *1-29*, *1-33*, *1-35*, *1-37*
102572401 *12-3*
102572601 *1-25*, *1-27*
102573101 *1-29*, *1-33*, *1-35*, *1-37*
102574801 *1-29*, *1-33*, *1-35*, *1-37*
102574901 *1-29*, *1-33*, *1-35*, *1-37*
102575101 *1-29*, *1-33*, *1-35*, *1-37*
102575201 *1-29*, *1-33*, *1-35*, *1-37*
102577001 *12-27*
102577002 *12-27*
102577401 *1-33*, *1-35*, *1-37*
102584701 *1-31*, *1-33*, *1-35*, *1-37*
102584801 *1-31*, *1-33*, *1-35*, *1-37*
102585801 *12-7*
102585901 *9-3*
102586201 *6-9*
102587401 *4-11*, *4-13*
102587501 *4-11*, *4-13*
102588301 *8-11*
102588501 *5-13*, *5-15*, *5-17*
102588601 *5-9*
102588701 *4-11*, *4-13*
102588901 *4-11*, *4-13*
102589901 *11-11*
102590001 *12-7*, *12-11*, *12-15*
102591901 *3-7*, *3-9*
102594301 *4-7*, *4-9*
102601501 *16-5*
102603501 *16-5*
102605201 *16-5*
102606101 *16-5*
102607501 *16-5*
102668801 *16-9*
102669901 *16-7*
102674001 *16-5*
102674101 *16-5*
102674201 *16-5*
102674401 *16-9*
102674601 *16-9*
102675001 *16-5*
102675101 *16-5*
102675201 *16-5*
102675301 *16-5*
102675401 *16-5*
102686101 *16-3*
102704701 *13-5*, *13-7*
102704801 *13-5*, *13-7*
102704901 *13-5*, *13-7*
102751601 *8-3*
102753401 *7-9*
102771701 *14-3*
102803301 *6-5*
102806201 *12-39*, *12-41*
102806203 *12-41*
102865101 *8-3*
102878101 *5-11*
102878201 *5-9*, *5-11*
102886301 *14-3*
102886401 *14-3*
102886501 *14-3*
102886601 *14-3*
102915601 *1-9*
102952202 *8-3*
102956201 *5-9*, *5-11*
102956301 *12-21*
102956401 *12-21*, *12-23*
102956501 *12-21*
102958001 *12-21*, *12-23*, *12-25*
102967901 *1-21*
102973801 *5-11*
102989101 *12-21*, *12-23*, *12-25*
103196001 *1-25*, *1-27*
103199301 *1-25*, *1-27*
103200301 *1-25*, *1-27*
103205101 *1-25*, *1-27*
103209501 *5-7*
103210101 *1-25*, *1-27*
103226201 *12-21*, *12-23*, *12-25*
103226301 *12-21*, *12-23*, *12-25*
103226401 *12-21*, *12-23*, *12-25*
103226601 *12-21*, *12-23*, *12-25*
103226701 *12-21*, *12-23*, *12-25*
103238501 *3-7*, *3-9*
103262001 *12-39*
103325501 *13-3*
103325601 *13-3*
103325701 *13-3*
103327601 *1-19*
103327701 *4-11*
103327801 *4-11*, *4-13*
103327901 *4-13*
103330601 *1-3*
103337601 *13-3*
103344301 *4-11*, *4-13*
103345701 *10-3*
103357701 *12-29*, *12-31*, *12-33*, *12-35*, *12-37*
103358501 *12-29*
103367901 *12-41*, *12-43*
103368301 *12-29*, *12-31*, *12-33*, *12-35*, *12-37*
103368401 *12-29*, *12-31*, *12-33*, *12-35*, *12-37*
103369401 *12-41*, *12-43*
103374801 *12-31*, *12-33*, *12-35*, *12-37*
103374901 *12-11*
103375301 *12-29*, *12-31*, *12-33*, *12-35*, *12-37*
103375401 *12-29*
103375501 *12-29*, *12-31*, *12-33*, *12-35*, *12-37*
103375701 *12-11*, *12-15*
103376001 *12-29*, *12-31*, *12-33*, *12-35*, *12-37*

INDEX

103384601 *3-9*
103384701 *3-9*
103384801 *3-9*
103388501 *5-9*
103395401 *12-25*
103395402 *12-23*
103395501 *12-25*
103395503 *12-23*
103395601 *12-35*, *12-37*
103395701 *12-25*
103397901 *15-5*, *15-7*
103402701 *1-9*
103403201 *12-39*
103403401 *12-43*
103403501 *12-15*
103413901 *12-31*, *12-33*, *12-35*, *12-37*
103414901 *15-5*, *15-7*
103415001 *15-5*, *15-7*
103421801 *12-11*, *12-15*
103423001 *1-17*
103423002 *1-17*
103423004 *1-17*
103428501 *15-3*
103428601 *15-3*
103428701 *15-3*
103428801 *15-3*
103429001 *15-3*
103429101 *15-3*
103429201 *15-3*
103429301 *15-3*
103429501 *15-3*
103429601 *15-3*
103429701 *15-3*
103434001 *15-3*
103439901 *15-3*
103446601 *12-41*, *12-43*
103458601 *2-3*, *2-5*
103459101 *2-3*, *2-5*
103498501 *12-41*, *12-43*
103499001 *1-21*
103499101 *15-3*
103499102 *15-3*
103499103 *15-3*
103528501 *4-5*
103528601 *4-5*
103528701 *4-5*
103528702 *4-5*
103528801 *4-5*
103535001 *4-5*, *4-7*, *4-9*
103572501 *13-7*
103629701 *4-5*
96704416 *7-15*

A

absorber, front shock *5-9*
absorber, rear shock *5-13*, *5-15*, *5-17*
AC cord *15-5*, *15-7*, *15-9*, *15-11*
AC cord bushing *15-3*, *15-5*
AC cord receptacle *15-11*
AC cordset *15-3*
accelerator cable *4-7*, *8-9*
accelerator pedal *4-11*, *4-13*
accelerator pedal adjustment tool *16-3*
accelerator pedal pad *4-11*, *4-13*
access panel *1-21*
adapter
  cable (IQDM) *16-7*
adhesive, guide ring *16-3*
adjuster
  hydraulic brake *16-7*
adjuster, lash *7-11*
air filter *8-11*
air filter canister evacuation valve *8-11*
air intake assembly *8-11*
air intake cover *8-11*
air intake hose *8-11*
ammeter *15-3*, *15-5*, *15-7*, *15-9*, *15-11*
arbor *16-3*
arm
  governor *11-3*
  pivot *11-3*
  rocker *7-9*
armature *6-15*, *13-3*, *13-5*, *13-7*
armature conversion kit *6-15*
armrest *1-17*, *1-29*, *1-33*, *1-35*, *1-37*
assembly
  armature *6-15*
  axle *11-7*
  brake lever *4-3*
  brush connector *6-15*
  brush holder *6-15*
  carburetor *8-5*
  connecting rod *7-13*
  cylinder head *7-9*
  drive hub *10-3*
  driven clutch *10-7*
  driven clutch fixed-face *10-7*
  field coil *6-15*
  float *8-5*
  frame and field (motor) *13-5*, *13-7*
  fuel tank vent *8-3*
  governor *11-5*
  idle screw *8-5*
  moveable-face *10-3*, *10-7*
  pilot air screw *8-5*
  plug cap *7-5*
  score card plate *5-5*
  secondary clutch weight *10-3*
axle *11-7*, *14-3*
axle shaft oil seal *11-7*, *14-3*
axle tube *14-3*

B

backing plate, brake *4-3*
backrest *1-19*, *1-29*, *1-33*, *1-35*, *1-37*
bag hoop *1-19*
bag strap *1-19*
bag strap buckle *1-19*
bag, desiccant *10-3*
ball bearing *7-11*
ball joint *5-19*
ball stud *11-9*
ball, bearing *5-19*
ball, shifter *11-5*
ball, steel pressure relief *7-7*
band, RPM limiter mount *7-5*
barb, vent *8-3*
barrel, plastic *1-7*, *1-11*, *1-19*, *1-29*, *1-31*, *1-33*, *1-35*, *1-37*, *4-7*, *4-9*, *12-35*, *12-37*
battery
  8-volt *12-31*, *12-35*
battery bucket *12-29*, *12-31*, *12-33*, *12-35*, *12-37*
battery cable *12-27*
battery cap *12-31*, *12-33*, *12-35*, *12-37*
battery cap, 6-volt *12-27*, *12-29*
battery charger *15-5*, *15-7*, *15-9*, *15-11*
battery charger case *15-5*, *15-7*, *15-9*, *15-11*
battery charger handle *15-5*
battery charger receptacle *12-27*
battery charger transformer *15-5*, *15-7*, *15-9*, *15-11*
battery charger wire harness *12-11*, *12-15*
battery clamp *6-5*
battery condition indicator *12-3*
battery discharge machine *16-3*
battery light *12-3*
battery seperator *12-29*
battery terminal protector spray *16-3*
battery thermometer *16-3*
battery, 12-volt *6-5*
battery, 12-volt, Trojan T1275, moist *12-27*, *12-29*
battery, 12-volt, Trojan T1275, wet *12-27*, *12-29*
battery, 8-volt, Trojan T890 *12-33*, *12-37*
bearing *14-3*
  ball *5-19*, *7-11*
  ball (motor) *13-5*, *13-7*
  idler *10-3*
  inner axle tube *11-7*, *14-3*
  needle *11-5*
  outer axle tube *11-7*
bearing and oil seal remover *16-3*
bearing driver set *16-3*
bearing puller *16-3*
bearing puller wedge *16-3*
bearing retainer *13-3*

INDEX

beauty panel, front *1-5*
beauty panel, rear *1-21*
bellows, steering *5-19*
belt, drive *10-5*
belt, starter/generator *6-17*, *10-3*
bezel, FNR *11-9*
body kick plate *1-13*, *1-15*
body, front *1-5*, *1-21*
body, under *1-21*
bolt, U- *1-33*, *1-35*, *1-37*, *5-17*
boot, switch *12-17*, *12-19*
bottom seat *1-17*
bracket
  accelerator cable *8-9*
  adjustable starter/generator *6-17*
  governor cable *8-9*
  muffler mounting *9-3*
  oil filter mount *7-7*
  oil level switch *7-11*
  relay mounting *15-9*
  RPM limiter *7-5*
  shock absorber *5-13*, *5-15*, *5-17*
  shock mounting *5-13*, *5-15*, *5-17*
  snubber *7-15*
  starter/generator mounting *6-17*
  throttle spring return *8-7*
bracket, clamshell *1-11*
brake adjusting mechanism *4-3*
brake adjustment tool *16-3*
brake backing plate *4-3*
brake cable release tool *16-3*
brake cluster *4-3*
brake drum *4-3*
brake lever *4-3*
brake pedal *4-11*, *4-13*
brake pedal adjustment tool *16-3*
brake pedal pad *4-11*, *4-13*
brake pedal tension tool *16-3*
brake return spring *4-11*, *4-13*
brake rod *4-11*, *4-13*
brake self-adjusting mechanism *4-3*
brake shoe *4-3*
brake spring *4-3*
breaker, circuit *15-3*, *15-5*, *15-7*, *15-9*, *15-11*
breather *11-3*, *14-3*
brow *1-5*
brow cap *1-5*
brush *13-3*, *13-5*, *13-7*
brush and screw set *6-15*
brush box assembly *13-5*, *13-7*
brush connector *6-15*
brush holder *6-15*
brush inspection port cover *6-15*
brush port cover *6-15*
brush rigging *13-3*, *13-5*, *13-7*
brush spring *13-3*, *13-5*, *13-7*
brush spring set *6-15*
bucket, battery *12-29*, *12-31*, *12-33*, *12-35*, *12-37*
bucket, electric vehicle *12-27*
buckle, bag strap *1-19*
bumper *1-3*
  drive unit (motor) *13-3*, *13-5*, *13-7*
  jounce *1-33*, *1-35*, *1-37*, *5-17*
  jounce, bracket *1-33*, *1-35*, *1-37*, *5-17*
bushing *5-9*, *5-11*, *5-13*, *5-15*, *5-17*, *10-3*
  AC cord *15-3*, *15-5*
bushing, insulated *13-3*
button, drive *10-7*
buzzer, reverse *6-3*, *12-3*

C

cable
  accelerator *4-7*, *8-9*
  FNR shifter *11-11*
  governor *8-9*
  IQDM *16-7*
cable support bracket *11-9*
cable, battery *12-27*
calibration test module *16-3*
cam
  driven clutch *10-7*
  neutral lockout *11-9*
cam installation tool *16-3*
camshaft *7-11*
camshaft shim *7-11*
canopy *1-25*, *1-27*
canopy bracket *1-21*
canopy component kit *1-27*
canopy cover *1-23*, *1-25*, *1-27*
canopy drain cover *1-25*, *1-27*
canopy handle *1-25*, *1-27*
canopy hardware *1-25*, *1-27*
canopy support *1-25*, *1-27*
cap
  battery *12-31*, *12-33*, *12-35*, *12-37*
  battery, 6-volt *12-27*, *12-29*
  dust *12-3*
  fuel tank *8-3*
  key switch *6-3*, *12-3*
  plug *7-5*
cap, SAM *1-23*
carburetor *8-5*
carburetor float level tool *16-7*
carburetor gasket *8-7*
carburetor insulator *8-7*, *13-3*
carburetor mounting gasket *8-7*
card, safety first *16-9*
case
  battery charger *15-5*, *15-7*, *15-9*, *15-11*
  differential gear *11-7*
  gear *11-3*, *14-3*
  rocker *7-9*
case, charger *15-3*
charger bezel tool *16-3*
charger board relay *15-3*
charger case *15-3*
charger hardware *15-3*
charger legs *15-3*
charger wires *15-3*
charger, battery *15-5*, *15-7*
choke botton rod *1-13*, *8-11*
choke lever *1-13*, *8-11*
circuit breaker *15-3*, *15-5*, *15-7*, *15-9*, *15-11*
clamp
  battery *6-5*
  cable retaining *8-9*
  hose *8-3*, *8-7*
  muffler hose *9-3*
clamshell bracket *1-11*
clip, body trim *1-11*, *1-21*
clip, score card *5-3*, *5-5*
closeout *12-27*
cluster idler gear *11-5*
cluster, brake *4-3*
clutch alignment tool *16-5*
clutch pulley *10-3*
clutch removal tool *16-3*
clutch repair kit *10-7*
clutch tool kit *16-5*
clutch weight *10-3*
clutch, drive *10-3*
clutch, driven *10-7*
coil, field *6-15*
coil, ignition *7-5*
collet *7-9*
column, steering *5-7*
comfort grip steering wheel kit *5-3*
communication display module *16-5*
component mounting plate *12-39*, *12-41*, *12-43*
compression gauge *16-5*
compression spring *1-13*, *8-11*
compressor, piston ring *16-9*
compressor, valve spring *16-11*
computer, v 3.0 onboard *12-39*
connecting rod *7-13*
connector tube, handrail *1-29*, *1-33*, *1-35*, *1-37*
connector, 9-pin *6-3*, *6-13*, *12-3*
connector, a- *6-15*
continuity tester *16-5*
controller shield *12-41*, *12-43*
controller, motor speed *12-39*, *12-41*
controller, speed *12-39*
cord connector *7-11*
cord set, DC *15-5*
cord, AC *15-5*, *15-7*, *15-9*, *15-11*
cord, DC *15-7*, *15-9*, *15-11*

INDEX

Cordset
- PD3, AC 114" *15-3*
- PD3, AC 80" *15-3*
- PD3, DC 113" *15-3*
- PD3, DC 154" *15-3*
- PD3, DC 205" *15-3*

counterbalance guide shaft *7-13*
counterbalance weight *7-13*
coupler, SPWS *12-21*, *12-23*, *12-25*
cover
- air intake *8-11*
- brush inspection port *6-15*
- brush port *6-15*
- crankcase *7-11*
- dust *4-3*
- electronics module *12-17*
- oil pump *7-7*

cover plate *13-5*, *13-7*
cover, canopy drain *1-25*, *1-27*
cover, steering column *5-3*
crankcase *7-13*
crankcase cover *7-11*
crankcase vent tube *8-7*
crankshaft *7-13*
crankshaft rod *7-13*
crankshaft shim *7-13*
current limiter *15-11*
cushion, shock absorber *5-13*, *5-15*, *5-17*
cutter, valve seat *16-5*, *16-11*

D

damper, RPM limiter *7-5*
dash *1-7*
dash support assembly *5-9*
dash tray *1-7*
DC cord *15-7*, *15-9*, *15-11*
DC cord set *15-5*
DC cordset *15-3*
decal
- battery tag *3-7*, *3-9*
- battery weight warning *3-7*, *3-9*
- CE mark *12-35*, *12-37*
- Club Car clip *3-3*
- component mounting plate *3-7*
- electrical cover safety *3-7*
- four-passenger warning *1-33*, *1-35*, *1-37*, *3-11*
- frame ground warning *3-3*
- gas and governor warning *3-3*
- IR/Club Car *1-11*
- on/off *3-3*, *3-5*
- operating instructions *3-3*, *5-3*
- operating instructions (electric) *3-5*
- operating instructions (gas) *3-3*
- private speed mode *3-5*
- rollover warning *3-3*, *3-5*
- rotating parts *3-3*
- Run/Tow warning *3-9*
- Tow/Run switch *3-7*
- warning *3-9*
- warning, battery weight *3-7*, *3-9*
- warning, Run/Tow *3-9*
- water exposure *3-9*

desiccant bag *10-3*
DF-terminal insulator *6-15*
diesel tachometer probe *16-9*
differential
- drive unit *14-3*

differential gear *11-7*, *14-3*
differential gear case *11-7*
differential housing *14-3*
differential idler gear *11-7*
differential pin *11-7*
diode, rectifier *15-5*
diode, tow switch *12-7*, *12-11*, *12-15*
dipstick *7-3*
drain channel *1-9*
drain plug *7-7*
drain plug gasket *7-7*, *11-3*
drive belt *10-5*
drive button *10-7*
drive clutch *10-3*
drive clutch button *10-3*
drive clutch fixed sheave tool *16-5*
drive clutch fixed-face *10-3*
drive clutch holder tool *16-5*
drive clutch hub puller *16-5*
drive clutch puller *16-5*
drive clutch spider removal tool *16-5*
drive clutch spring *10-3*
drive clutch weight *10-3*
drive hub *10-3*
drive unit bumper *13-3*, *13-5*, *13-7*
driven clutch *10-7*
driven clutch button *10-7*
driven clutch cam *10-7*
driven clutch cam puller *16-5*
driven clutch fixed-face assembly *10-7*
driven clutch puller plug *16-5*
driven clutch spring compression base tool *16-5*
driven clutch spring compression collar tool *16-5*
driven clutch spring compression nut tool *16-5*
driver, drive clutch *10-3*
drum, brake *4-3*
dry moly lubricant *16-7*
dust cap *12-3*
dust cover *4-3*
dust seal *5-19*

E

eccentric adjustment screw *5-11*
electrical component mounting plate *12-41*, *12-43*
end bell, commutator *6-15*
end bell, output shaft *6-15*
end cap, motor *13-3*, *13-5*, *13-7*
end shield
- motor *13-3*

end, tie rod *5-19*
engine mounting plate *7-15*
engine shroud *7-3*
engine, FE350 CW without ACR *7-3*
exhaust system *9-3*
exhaust valve *7-9*

F

face, moveable *10-3*, *10-7*
fan housing *7-3*
fan shroud *7-3*
fan, flywheel *7-5*
fascia *1-5*
field coil *6-15*
field coil housing *6-15*
fill plug *11-3*
filter
- air *8-11*
- fuel *8-3*
- oil *7-7*
- oil pump *7-7*

fixed-face, drive clutch *10-3*
fixed-face, driven clutch *10-7*
float *8-5*
floor cover plate *4-7*, *4-9*
floor mat *1-31*, *1-33*, *1-35*, *1-37*
floormat *1-11*
floormat retainer *1-11*
flywheel *7-5*
flywheel fan *7-5*
flywheel fan plate *7-5*
flywheel puller *16-7*
FNR bezel *11-9*
FNR handle *11-9*
FNR housing *12-17*, *12-19*
FNR shift lever *11-3*
FNR shifter *11-9*
FNR shifter base *11-9*
FNR shifter cable *11-11*
foam tape *1-21*
foot deck *1-31*, *1-33*, *1-35*, *1-37*
fork, shift *11-5*
four-passenger conversion kit *1-33*, *1-35*
four-passenger kit *1-37*
frame and field assembly (motor) *13-5*, *13-7*
front body *1-5*, *1-21*

INDEX

front body, beauty panel *1-5*
front hub *5-11*
front suspension structure *5-9*
F-terminal hardware *6-15*
f-terminal insulator *6-15*
fuel filter *8-3*
fuel line *8-3*, *8-7*
fuel pickup tube *8-3*
fuel pump, impulse *8-3*
fuel tank *8-3*
fuel tank cap *8-3*
fuel tank hold-down *8-3*
fuel tank vent *8-3*
fuse *15-7*, *15-9*, *15-11*
  10-amp *6-5*
  15-amp *12-17*, *12-19*
  charger *15-3*, *15-5*
fuse cover, sealed *6-5*

G

gasket *14-3*
  air intake *8-11*
  carburetor *8-7*
  carburetor mounting *8-5*, *8-7*
  crankcase cover *7-9*, *7-11*
  drain plug *7-7*, *11-3*
  exhaust *7-9*, *9-3*
  head *7-9*
  insulator *7-9*, *8-7*
  liquid *11-3*, *14-3*, *16-7*
  rocker case *7-9*
gasket kit, FE350 *7-9*
gauge, compression *16-5*
GCOR *4-11*
gear
  case *11-3*, *14-3*
  cluster idler *11-5*
  differential *11-7*, *14-3*
  differential idler *11-7*, *14-3*
  differential output *14-3*
  helical *7-13*, *11-5*, *11-7*
  spur *7-13*, *11-5*
  steering *5-19*
  synchro *11-5*
gear yoke *16-7*
governor *11-5*
governor arm *11-3*
governor cable *8-9*
governor cable bracket *8-9*
governor shaft installation tool *16-7*
governor shield *8-7*
grip, pencil *5-3*, *5-5*
grommet *8-3*
guide
  intake valve *7-9*
  valve *7-9*
  valve seat cutter *16-11*
guide ring adhesive *16-3*

H

hand rail *1-31*, *1-33*, *1-35*, *1-37*
handle, battery charger *15-5*
handle, FNR *11-9*
handrail connector tube *1-29*, *1-33*, *1-35*, *1-37*
hardware kit, charger *15-3*
hardware, F-terminal *6-15*
harness, instrument panel *6-3*, *6-13*, *12-3*
harness, wire *6-9*, *12-7*, *12-11*, *12-15*
harness, wire, batery charger *12-11*, *12-15*
head gasket *7-9*
head, cylinder *7-9*
heatsink *12-39*, *15-5*
heatsink and rectifier *15-3*, *15-7*, *15-9*, *15-11*
helical gear *7-13*, *11-5*, *11-7*
hinge *12-29*, *12-31*, *12-33*, *12-35*, *12-37*
hinge plate *1-17*
hip restraint *1-17*, *1-29*, *1-33*, *1-35*, *1-37*
hold-down, fuel tank *8-3*
hoop, bag *1-19*
hose, air intake *8-11*
hose, fuel *8-3*
hose, SPWS *12-21*, *12-23*, *12-25*
housing
  3-pin *13-3*, *13-5*, *13-7*
  differential *14-3*
  fan *7-3*
  field coil *6-15*
hub *5-11*
hub, front *5-11*
hub, synchronizer clutch *11-5*
hubcap *5-11*
hydraulic brake adjuster *16-7*
hydrometer *16-7*

I

idle screw assembly *8-5*
idler bearing *10-3*
idler gear, differential *14-3*
ignition coil *7-5*
inner frame snubber *7-15*
input shaft *14-3*
insert, synchronizer *11-5*
instrument panel *6-3*, *12-3*
instrument panel harness *6-3*, *6-13*, *12-3*
insulated bushing *13-3*
insulator gasket *7-9*, *8-7*
insulator, carburetor *8-7*, *13-3*
intake assembly *8-11*
intake cover *8-11*
intake hose *8-11*
intake pipe *8-7*
intake valve *7-9*
intermediate shaft *14-3*
internal retaining ring pliers *16-7*
IQ display module (IQDM) *16-7*

J

J-clip *1-21*
jet, main *8-5*
jet, pilot *8-5*
joint
  ball *5-19*
jounce bumper *1-33*, *1-35*, *1-37*, *5-17*
jounce bumper bracket *1-33*, *1-35*, *1-37*, *5-17*

K

key
  crankshaft *7-5*, *7-13*
  driven clutch *10-7*
  On/Off *6-3*, *12-3*
  square *10-7*
  starter/generator *6-15*
  woodruff *11-3*
key switch *6-3*, *12-3*
key switch cap *6-3*, *12-3*
kick plate *1-13*
kick plate, body *1-13*, *1-15*
king pin *5-11*
kit
  3-pin housing *13-3*, *13-5*, *13-7*
  brake pedal adjustment tool *16-3*
  brake shoe retainer *4-3*
  canopy component *1-27*
  clutch repair *10-7*
  comfort grip steering wheel *5-3*
  differential gear case *11-7*
  drive clutch button *10-3*
  drive clutch weight *10-3*
  driven clutch button *10-7*
  four-passenger *1-37*
  front hub replacement *5-11*
  impulse fuel pump rebuild *8-3*
  IQ display module (IQDM) *16-7*
  magnet and bearing *13-3*
  motor brush *13-5*, *13-7*
  motor brush spring *13-5*, *13-7*
  motor cover plate *13-5*, *13-7*
  motor speed sensor *13-5*, *13-7*
  motor terminal hardware *13-5*, *13-7*
  neutral lockout cam *11-9*
  PD3 Cordest, AC 114" *15-3*
  PD3 Cordest, AC 80" *15-3*
  PD3 Cordest, DC 113" *15-3*
  PD3 Cordest, DC 154" *15-3*
  PD3 Cordest, DC 205" *15-3*
  PD3 hardware *15-3*

INDEX

PD3 wiring *15-3*
shock absorber cushion *5-13*, *5-15*, *5-17*
SPWS *12-23*, *12-25*
SPWS (single-point watering system) *12-21*
tune-up *16-9*

L

lash adjuster *7-11*
L-bracket, motor *13-5*, *13-7*
leaf spring *1-33*, *1-35*, *1-37*, *5-11*, *5-13*, *5-15*, *5-17*
legs, charger *15-3*
lever
change *11-3*
choke *1-13*, *8-11*
light
battery *12-3*
oil *6-3*
limit switch *11-9*
limiter
current *15-11*
RPM *7-5*
line, fuel *8-3*, *8-7*
liquid gasket *11-3*, *14-3*, *16-7*
low oil warning light *6-3*
lubricant, dry moly *16-7*
lubricant, moly-teflon *13-3*, *13-5*, *13-7*, *16-7*
lug nut *2-3*, *2-5*
lug stud *5-11*, *11-7*, *14-3*

M

magnet and bearing kit *13-3*
magnet, speed sensor *13-3*, *13-5*, *13-7*
main jet *8-5*
manifold, 4-valve *12-25*
manifold, SPWS *12-21*, *12-23*
mat, floor *1-11*, *1-31*, *1-33*, *1-35*, *1-37*
MCOR *4-13*
mechanism, brake adjusting *4-3*
meter, volt ohm *16-11*
module
calibration test *16-3*
communication display *16-5*
moly-teflon lubricant *16-7*
motor
48-volt *13-3*
48-volt IQ *13-5*, *13-7*
motor armature *13-3*
motor brush *13-3*
motor brush kit *13-5*, *13-7*
motor brush spring kit *13-5*, *13-7*
motor bumper *13-3*, *13-5*, *13-7*
motor controller *12-39*
motor end cap *13-3*, *13-5*, *13-7*
motor end shield *13-3*
motor L-bracket *13-5*, *13-7*
motor magnet, speed sensor *13-3*, *13-5*, *13-7*
motor speed controller *12-39*, *12-41*
motor speed sensor *13-3*, *13-5*, *13-7*
motor speed sensor kit *13-5*, *13-7*
motor stator shell and winding *13-3*
motor terminal hardware kit *13-5*, *13-7*
moveable-face *10-3*, *10-7*
muffler hose clamp *9-3*

N

nameplate *1-5*
needle bearing *11-5*
neutral lockout cam *11-9*
nozzle, main *8-5*
nut, lug *2-3*, *2-5*

O

oil filler tube *7-3*
oil filter *7-7*
oil filter mount bracket *7-7*
oil filter screen *7-11*
oil filter screen plate *7-11*
oil level sensor *7-11*
oil level switch bracket *7-11*
oil pump and rotor *7-7*
oil pump cover *7-7*
oil pump filter *7-7*
oil pump plate *7-7*
oil seal *7-9*, *7-11*, *7-13*, *11-3*, *11-5*
oil warning light, low *6-3*
onboard computer (v 3.0) *12-39*
O-ring *7-3*, *7-9*, *7-11*, *7-13*, *12-21*, *12-23*, *12-25*

P

pad
accelerator pedal *4-11*, *4-13*
brake pedal *4-11*, *4-13*
park brake pedal *4-11*, *4-13*
paint, touch-up *16-7*
panel
SAM *1-19*
panel, access *1-21*
panel, beauty
front body *1-5*
rear body *1-21*
park brake pad *4-11*, *4-13*
pedal assembly *4-11*, *4-13*
pedal group *4-11*, *4-13*
pedal spring kit *4-11*, *4-13*
pencil grip *5-3*, *5-5*
pilot air screw assembly *8-5*
pilot jet *8-5*
pin, differential *11-7*
pin, king *5-11*
pin, piston *7-13*
pinion, steering *5-19*
pipe, intake *8-7*
piston *7-13*
piston pin *7-13*
piston ring *7-13*
piston ring compressor *16-9*
piston ring pliers *16-9*
piston ring set *7-13*
pivot arm *11-3*
plate
backing (brake) *4-3*
cover *13-5*, *13-7*
engine mounting *7-15*
flywheel fan *7-5*
hinge *1-17*
kick *1-13*
oil filter screen *7-11*
oil pump *7-7*
score card *5-5*
thrust *11-5*, *11-7*
plate, component mounting *12-39*, *12-41*, *12-43*
plate, floor cover *4-7*, *4-9*
pliers
internal retaining ring *16-7*
piston ring *16-9*
retaining ring *16-9*
plug
drain *7-7*
driven clutch puller *16-5*
fill *11-3*
spark *7-5*
plug cap *7-5*
pole set *6-15*
press weldment *16-5*
protector spray, battery terminal *16-3*
puller
bearing *16-3*
clutch *16-3*
drive clutch *16-5*
drive clutch hub *16-5*
driven clutch cam *16-5*
flywheel *16-7*
seal *16-9*
special use tool *16-9*
pulley
clutch *10-3*
starter-generator *6-15*
pump, impulse fuel *8-3*
push rod *7-9*

R

rack and pinion *5-19*
rack and pinion steering gear box *5-19*
rack, steering *5-19*

INDEX

reaf-facing seat *1-37*
reamer, valve guide *16-9*
rear body, beauty panel *1-21*
receptacle *12-29*, *12-31*, *12-33*, *12-35*, *12-37*
receptacle, AC cord *15-11*
receptacle, battery charger *12-27*
rectifier diode *15-5*
rectifier with heatsink *15-3*, *15-7*, *15-9*, *15-11*
regulator, voltage *6-5*
relay *15-9*, *15-11*
relay mounting bracket *15-9*
relay, charger board *15-3*
remover, bearing and oil seal *16-3*
resistor *12-39*
resistor assembly *12-41*, *12-43*
restraint, hip *1-17*, *1-29*, *1-33*, *1-35*, *1-37*
retainer
  bearing *13-3*
  brake shoe *4-3*
  shock absorber cushion *5-13*, *5-15*, *5-17*
  spring (drive clutch) *10-3*
  valve spring *7-9*
retainer, floormat *1-11*
retaining ring pliers *16-9*
return spring, brake *4-11*, *4-13*
reverse buzzer *6-3*, *12-3*
rigging, brush *13-3*
ring
  piston *7-13*
  retaining *10-3*, *10-7*, *11-9*
  snap *7-9*, *7-13*
  spiral backup *10-3*
  synchronizer *11-5*
ring, piston *7-13*
rocker arm *7-9*
rocker case *7-9*
rocker case gasket *7-9*
rocker shaft *7-9*
rocker switch *12-17*, *12-19*
rod
  brake *4-11*, *4-13*
  connecting *7-13*
  crankshaft *7-13*
  push *7-9*
  shift *11-5*
rotor, oil pump and *7-7*
RPM limiter *7-5*
RPM limiter bracket *7-5*
RPM limiter damper *7-5*
RPM limiter mount band *7-5*

S

safety first card *16-9*
SAM *1-19*
SAM (structural accessory module) *1-19*
SAM cap *1-23*
SAM panel *1-19*
score card clip *5-3*, *5-5*
score card holder *5-3*
score card plate *5-3*, *5-5*
screen, oil filter *7-11*
screw, eccentric adjustment *5-11*
screw, valve clearance adjuster *16-9*
seal
  dust *5-19*
  lip *14-3*
  oil *7-9*, *7-11*, *7-13*, *11-3*, *11-5*, *11-7*, *14-3*
seal puller *16-9*
sealant *11-3*, *14-3*
seat
  spring *7-9*
  valve *7-7*
seat bottom *1-17*, *1-29*, *1-33*, *1-35*, *1-37*
seat bracket *1-29*, *1-33*, *1-35*, *1-37*
sensor, motor speed *13-3*, *13-5*, *13-7*
sensor, oil level *7-11*
sensor, speed *13-3*
seperator, battery *12-29*
set, brush and screw *6-15*
set, pole *6-15*
shackle *5-13*, *5-15*, *5-17*
shaft
  change *11-3*
  counterbalance guide *7-13*
  input *14-3*
  intermediate *14-3*
  rocker *7-9*
  transmission *11-5*
shield, controller *12-41*, *12-43*
shield, governor *8-7*
shift fork *11-5*
shift lever *11-3*
shift rod *11-5*
shifter, FNR *11-9*
shim, camshaft *7-11*
shim, crankshaft *7-13*
shock absorber (front) *5-9*
shock absorber (rear) *5-13*, *5-15*, *5-17*
shock absorber cushion *5-13*, *5-15*, *5-17*
shock absorber cushion retainer *5-13*, *5-15*, *5-17*
shock mounting bracket *5-13*, *5-15*, *5-17*
shoe, brake *4-3*
shroud *7-3*
shroud, engine *7-3*
shroud, fan *7-3*
single-point watering system *12-21*
sleeve *5-9*, *5-11*, *5-13*, *5-15*, *5-17*
  governor *11-5*
  synchronizer *11-5*
snap ring *7-9*, *7-13*
snubber bracket *7-15*
snubber, inner frame *7-15*
solenoid, 12-volt *6-5*
solenoid, 48-volt *12-39*, *12-41*, *12-43*
spanner wrench *16-9*
spark plug *7-5*
speed controller *12-39*, *12-41*
speed sensor *13-3*, *13-5*, *13-7*
speed sensor magnet *13-3*, *13-5*, *13-7*
speed sensor, motor *13-3*, *13-5*, *13-7*
spindle *5-11*
spiral backup ring *10-3*
spray, battery terminal protector *16-3*
spring
  brake *4-3*
  brake return *4-11*, *4-13*
  brush *6-15*, *13-3*, *13-5*, *13-7*
  compression *1-13*, *5-3*, *5-5*, *8-11*
  drive button *10-3*
  drive clutch *10-3*
  driven clutch *10-7*
  forward/reverse cam *11-9*
  leaf *1-33*, *1-35*, *1-37*, *5-11*, *5-13*, *5-15*, *5-17*
  shifter *11-5*
  synchronizer *11-5*
  throttle return *8-7*
  valve *7-9*
spur gear *7-13*, *11-5*
SPWS *12-21*
SPWS (single-point watering system) kit *12-21*
SPWS coupler *12-21*, *12-23*, *12-25*
SPWS fitting, swivel T *12-21*, *12-23*, *12-25*
SPWS hose *12-21*, *12-23*, *12-25*
SPWS kit *12-23*, *12-25*
SPWS manifold *12-21*, *12-23*, *12-25*
SPWS tubing *12-21*, *12-23*, *12-25*
stand-offs, plastic *15-3*
starter/generator *6-15*
starter/generator belt *6-17*, *10-3*
starter/generator pulley *6-15*
stator shell and winding *13-3*
steel pressure relief ball *7-7*
steering column *5-7*
steering column bearing press tool *16-9*
steering column cover *5-3*
steering column retaining ring tool *16-9*
steering gear *5-19*
steering pinion *5-19*
steering rack *5-19*
steering wheel *5-3*
steering wheel (comfort grip) kit *5-3*
steering wheel puller tool *16-9*
steering, rack and pinion gear box *5-19*
stem, valve *2-3*, *2-5*
stiffener, flywheel side *7-15*
stiffener, PTO side *7-15*
strap, bag *1-19*

INDEX

stud *7-15*
  lug *5-11*, *11-7*, *14-3*
stud, ball *11-9*
suppressor, voltage *15-7*, *15-9*, *15-11*
suspension, front structure *5-9*
switch
  four-position *15-9*, *15-11*
  key *6-3*, *12-3*
  limit *11-9*
  rocker *12-17*, *12-19*
  Tow/Run *12-17*, *12-19*
switch rubber boot *12-17*, *12-19*
synchro gear *11-5*
synchronizer clutch hub *11-5*
synchronizer insert *11-5*
synchronizer sleeve *11-5*
synchronizer spring *11-5*

T

12-volt battery *6-5*
12-volt solenoid *6-5*
tachometer *16-9*
tachometer probe, diesel *16-9*
tag, battery warning *3-7*, *3-9*
tank, fuel *8-3*
tape, foam *1-21*
tester, continuity *16-5*
thermometer, battery *16-3*
throttle return spring *8-7*
throttle spring return bracket *8-7*
thrust plate *11-5*, *11-7*
tie rod end *5-19*
tie wrap *12-31*, *12-33*, *12-35*, *12-37*
tire *2-3*, *2-5*
tire, pro tour, 205-50 x 10 *2-5*
tool
  accelerator pedal adjustment *16-3*
  belt tensioning, starter/generator *16-11*
  brake adjustment *16-3*
  brake cable release *16-3*
  brake pedal adjustment *16-3*
  brake pedal tension *16-3*
  cam installation *16-3*
  carburetor float level *16-7*
  charger bezel *16-3*
  clutch alignment *16-5*
  cT-wrench *16-5*
  drive clutch fixed sheave *16-5*
  drive clutch holder *16-5*
  drive clutch spider removal *16-5*
  driven clutch spring compression base *16-5*
  driven clutch spring compression collar *16-5*
  driven clutch spring compression nut *16-5*
  governor shaft installation *16-7*
  puller, special use *16-9*
  steering column bearing press *16-9*
  steering column retaining ring *16-9*
  steering wheel puller *16-9*
  transaxle axle seal *16-9*
  transaxle pinion seal *16-9*
  transmission *16-9*
  valve guide driver *16-9*
  valve seat cutter *16-5*
tool kit, clutch *16-5*
touch-up paint *16-7*
tow switch diode *12-7*, *12-11*, *12-15*
Tow/Run switch *12-17*, *12-19*
transaxle *14-3*
transaxle axle seal tool *16-9*
transaxle housing *14-3*
transaxle pinion seal tool *16-9*
transaxle, unitized *11-3*
transformer *15-3*
transformer, battery charger *15-5*, *15-7*, *15-9*, *15-11*
transmission shaft *11-5*
transmission tool *16-9*
tube
  crankcase vent *8-7*
  fuel pickup *8-3*
  oil filler *7-3*
tubing, SPWS *12-21*, *12-23*, *12-25*
tune-up kit *16-9*
T-wrench tool *16-5*

U

U-bolt *1-33*, *1-35*, *1-37*, *5-17*
u-bolt *5-13*, *5-15*
underbody *1-21*
underbody cover *1-29*, *1-33*, *1-35*, *1-37*
underbody cover kit *1-23*
underbody, rear *1-21*
unitized transaxle *11-3*

V

valve
  exhaust *7-9*
  intake *7-9*
  reed *7-9*
valve clearance adjuster screw *16-9*
valve guide *7-9*
valve guide driver tool *16-9*
valve guide reamer *16-9*
valve guide, intake *7-9*
valve seat *7-7*
valve seat cutter *16-5*, *16-11*
valve seat cutter guide *16-11*
valve seat cutter tool *16-5*
valve seat t-wrench *16-11*
valve spring *7-9*
valve spring compressor *16-11*
valve spring retainer *7-9*
valve stem *2-3*, *2-5*
vent barb *8-3*
volt ohm meter *16-11*
voltage regulator *6-5*
voltage suppressor *15-7*, *15-9*, *15-11*

W

warning light, low oil *6-3*
warning tag, battery *3-7*, *3-9*
watering system, single-point *12-21*
wedge, bearing puller *16-3*
weight
  clutch *10-3*
  counterbalance *7-13*
  secondary clutch *10-3*
weldment
  press *16-5*
wheel *2-3*, *2-5*
wheel and tire *5-5*
wheel, steering *5-3*
wire harness *6-9*, *12-7*, *12-11*, *12-15*
wire harness, battery charger *12-11*, *12-15*
wire harness, Excel *12-15*
wiring, charger *15-3*
woodruff key *11-3*
wrap, tie *12-31*, *12-33*, *12-35*, *12-37*
wrench, spanner *16-9*

Y

yoke support *5-19*
yoke, gear *16-7*

Club Car, Inc.
P.O. Box 204658
Augusta, GA 30917-4658
USA

Web www.clubcar.com
Phone 1.706.863.3000
1.800.ClubCar
Int'l +1 706.863.3000
Fax 1.706.863.5808

Ingersoll Rand
Industrial Technologies