TAYLOR-DUNN®

MANUAL MB-150-01

OPERATORS and MAINTENANCE MANUAL

This Manual Covers Serial Numbers: 136914 & up

MODELS:

B1-50

2114 W. Ball Rd., Anaheim, CA 92804
(714) 956-4040 (FAX) (714) 956-0504
Mailing Address: P.O. Box 4240, Anaheim, California 92803
Visit our Website: www.taylor-dunn.com

VER: A

8/99

INTRODUCTION

Copyright © 1999 by Taylor-Dunn Mfg. All rights reserved.

No part of this work may be reproduced or transmitted in any form or by any means, electronic or mechanical, including photocopying and recording, or any information storage or retrieval system without prior written permission of Taylor-Dunn Mfg. unless such copying is expressly permitted by federal copyright law. Address inquiries to Reference Permissions, Taylor-Dunn Mfg., 2114 W. Ball Road, Anaheim, CA 92804

For more information about this and other Taylor-Dunn Manuals, write Taylor-Dunn at Taylor-Dunn Mfg., 2114 W. Ball Road, Anaheim, CA 92804

TAYLOR-DUNN®

Operator and Maintenance Manual

A guide to the operation and maintenance of Taylor-Dunn Vehicles

TAYLOR-DUNN®

Table of Contents

Introduction ..... i-viii
Who Should Read This Manual ..... i-ix
Responsibilities ..... i-ix
How To Use This Manual ..... i-x
Conventions ..... i-xi

Vehicle Description and Specifications 1-1

Vehicle Description 1-2
Standard Specifications 1-3
Taking Delivery of Your Vehicle 1-4
What To Do If You Find a Problem 1-5

Safety Rules and Operational Information 1-7

Safety Rules and Guidelines 1-8
DRIVER TRAINING PROGRAM 1-9
Driver Qualifications 1-9
VEHICLE CONTROLS 1-10
Key-Switch 1-10
Seat Interlock Switch 1-10
Forward-Reverse Switch 1-10
Accelerator Pedal 1-10
Steering 1-11
Foot Brake Pedal 1-11
Park Brake Lever 1-11
Horn Button 1-11
Headlights and Accessories (Optional) 1-11
Hour Meter (optional) 1-11
Battery Status Indicator 1-11
Vehicle Operational Guidelines 1-12
Driving 1-12
Loading and Unloading 1-12
Parking 1-12
Towing 1-12
Storing and Returning to Service 1-13
Returning To Service 1-13

INTRODUCTION

Maintenance and Service Procedures 2-1

Maintenance Guidelines 2-2
B1-50 LUBRICATION CHART 2-6
TROUBLESHOOTING GUIDE 2-7
Brakes 2-9
Standard Mechanical Rear Drum Brakes 2-10
Mechanical Brake Linkage Adjustment 2-11
Rear Brake Replacement (Mechanical) 2-12
Replacing the Brake Pedal and Linkage 2-13
Rear Drum Brake Adjustments 2-14
Brake Shoe Removal 2-16
Parking Brake 2-18
Park Brake Adjustment 2-19
Front Axle and Steering 2-21
Axle Removal 2-22
Axle Installation 2-23
Aligning the Front End 2-24
Centering the Steering 2-25
Repairing the Front Axle 2-26
Steering Yoke/Bushings 2-26
Wheel Bearings 2-27
Ball Joints 2-28
Steering Gear Adjustment 2-29
Endplay 2-29
Gear Lash 2-29
To Remove the Steering Wheel 2-30
To Remove the Steering Column or Tower 2-31
To Reinstall the Steering Column/Tower 2-32
Removal of Steering Gear 2-33
Installing the Steering Gear 2-34
Steering Gear Disassembly and Repair 2-36
End Play 2-39
Gear Lash 2-39
Replace Drag Link, Tie Rods and Ball Joints 2-41
Drive Service 2-43
Removing and Servicing the Rear Axle 2-44
Servicing the Differential 2-45
Changing the Differential Oil 2-47
Removing the Complete Drive Assembly 2-48
Motor 2-50
Motor Removal 2-50

Motor Service 2-51
Armature Inspection 2-51
Inspecting and Replacing the Brushes 2-53
Drive Motor 2-55
Motor Disassembly 2-55
Replacing the Brushes 2-55
Inspecting the Armature 2-56
Battery 2-57
Cleaning 2-57
Servicing 2-58
Charging 2-58
Battery Storage 2-59

Electrical and Charger Troubleshooting 3-1

PMC TROUBLESHOOTING 3-3
IMPORTANT NOTES and INSTRUCTIONS 3-3
CONTROL WIRES AT PMC 3-5
POWER WIRING 3-6
ACCELERATOR MODULE (magnetic or solid state only) 3-9
KSI 3-14
SOLENOIDS 3-16
FORWARD CONTACTS 3-23
SPECIAL TROUBLESHOOTING 3-24
MOTOR 3-26
PMC CONTROL 3-28
PLUGGING DIODE 3-30
FREEWHEEL DIODE 3-31
ISO 3-32
SOLENOIDS 3-33
Schematic Diagrams 3-36
B1-50 36-Volt System 3-37
Lestronic II Charger Troubleshooting 3-41
Operating Instructions and Theory of Operation
Lester Lestronic II battery charger 3-41
Specific gravity 3-43
Troubleshooting for Built-in Charger 3-45
Troubleshooting for Portable Charger 3-50

Illustrated Parts List **4-1**

STANDARD FRONT AXLE 4-2
FRONT SUSPENSION 4-4
STEERING GEAR 4-6
STEERING ASSY 4-8
DRAG LINK 4-10
PARK BRAKE LINKAGE 4-12
REAR MECHANICAL DRUM BRAKES (STANDARD) 4-14
REAR SUSPENSION 4-16
INSTRUMENT PANEL 4-18
FRAME 4-20
MOTOR 4-22
REAR AXLE 4-24
CONTROL PANEL 4-26
BATTERY 4-28
BATTERY CHARGERS 4-30
CAB DOORS 4-32
HEAD LIGHT & WINDSHIELD WIPER 4-34
STROBE LIGHT & MIRRORS 4-36
STAKE SIDES 4-38
WINDSHIELD & REAR WINDOW 4-40
CAB 4-42
TAIL LIGHT 4-44
KITS 4-46

Appendix **A-1**

FIGURES FOR KSI TEST A-2

Index **I-1**

Introduction

Your purchase...

Your purchase of this vehicle shows that you believe in high quality products manufactured in the USA. Taylor-Dunn a leading manufacture of electric burden and personnel carriers since 1949; wants to be sure that you get the most out of your vehicle and that it provides years of reliable service. Please continue to read this manual and enjoy your high quality Taylor-Dunn vehicle.

This manual is to serve as a guide for the service, repair and operation of the Taylor-Dunn vehicle, and is not intended as a training guide. Taylor-Dunn has made every effort to include as much information as possible about the operation and maintenance of it's vehicles.

What's contained in this manual?

Included in this manual are the:

- Vehicle Description
- Safety Rules and Guidelines
- Operational Information
- Operator Responsibilities
- Owner Responsibilities
- Control Operation and Location Information
- Maintenance and Troubleshooting Information
- Parts Lists of Standard Parts

Before servicing....

Before servicing, operating, training, performing maintenance on this or any Taylor-Dunn vehicle; read the entire manual and note all cautions, warnings and notes contained in this manual.

Who Should Read This Manual

This manual is intended for use by anyone who is going to operate, own, perform maintenance, service or order parts for a Taylor-Dunn vehicle. Each person should be familiar with the parts of this manual that apply to them.

Responsibilities

Of the Owner...

The owner of this or any Taylor-Dunn vehicle is responsible for the training of operators, overall maintenance and repairs of the vehicle. Owners should keep a record of conducted training and services or repairs performed on the vehicle. (OSHA Regulation, 29 CFR(Code of Federal Reglations) 1910.178 Powered Industrial Truch Operator Training.)

Of the Operator...

The operator is responsible for the safe operation of the vehicle; preoperational and operational checks on the vehicle, and reporting any problems to service and repair personnel.

Of the Service Personnel...

The service personnel are responsible for the service and maintenance of the vehicle, from lubrication to repair of damaged or worn parts. At no time should a service person allow any untrained personnel to service or repair this or any vehicle. For the purposes of training a qualified service person may oversee the repairs or services being made to a vehicle by an individual in training. At no time should an untrained individual be allowed to service or repair a vehicle without supervision. This manual is not a training guide.

How To Use This Manual

This manual is organized into four main sections:

- Section 1: "Safety Rules and Operational Information," outlines the safety issues and operational issues of the vehicle. Including the location of controls and their operation; and the operational checks that are to be performed. Along with subjects that should be included in any operator and service training programs implemented by the owner.
- Section 2: "Maintenance and Repair," gives specific information on the maintenance and repair of the vehicle and a schedule for maintenance checks.
- Section 3: "Electrical and Chager Troubleshooting," gives the troubleshooting procedures for testing the electrical system, and battery charger.
- Section 4: " Parts," gives an illustrated view of various assemblies and a table listing the part numbers, and quantities needed.

On the next page you will find a list of conventions that are used throughout this manual. (Conventions are symbols and/or words that are used to define warnings, cautions or notes.)

Conventions

Throughout this manual you will find the following notations:

⚠WARNING

A shaded box with the word Warning on its left denotes a warning. A warning alerts you of a hazard that may cause injury to yourself or others. Be sure to follow any instructions contained with in a warning and exercise extreme care while performing the task

⚠CAUTION

The symbol at the left and the bold text contained within a box denotes a caution and is used to inform you that property damage may occur. Be sure to exercise special care and follow any instructions contained with in a caution.

NOTE 1: Alerts you to additional information about a subject. A number immediately after the word note is included for reference within each subject.

TAYLOR-DUNN® MFG.

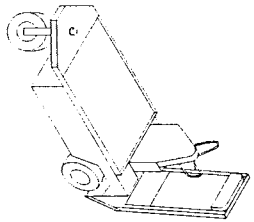

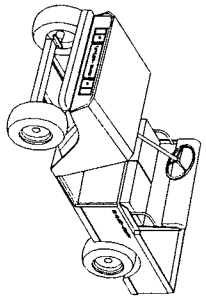

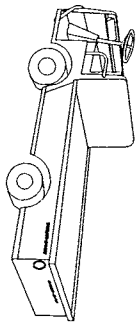

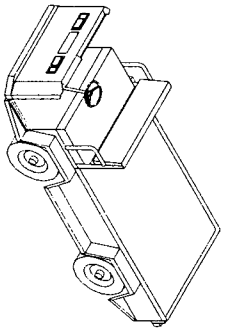

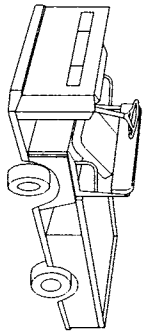

Vehicle Description and Specifications

Describes the Vehicle and Its Standard Specifications

Vehicle Description

This manual applies to vehicles with the same model and serial numbers listed on the front cover.

This vehicle is designed for driving on smooth surfaces in and around industrial plants, nurseries, institutions, motels, mobile home parks and resorts. It is not to be driven on public highways.

The maximum operating speed of this vehicle is the speed that the vehicle may travel on a level surface with no load. Exceeding this speed, while traveling down an incline or on a level surface, may result in steering difficulty, motor damage and/or loss of control of the vehicle. That may result in injury and/or property damage. It is just as important that the vehicle not be towed faster than 5-mi/h.

This vehicle conforms to requirements for Type E vehicles as described in O.S.H.A. Standard Section 1910.178 (Powered Industrial Trucks) and with all applicable portions of the American National Standard for Personnel and Burden Carriers (ANSI B56.8).

The model and serial number for this vehicle are imprinted on a decal located on the inner left side of the front cowl. The vehicle serial number is stamped in the frame, under the deck board.

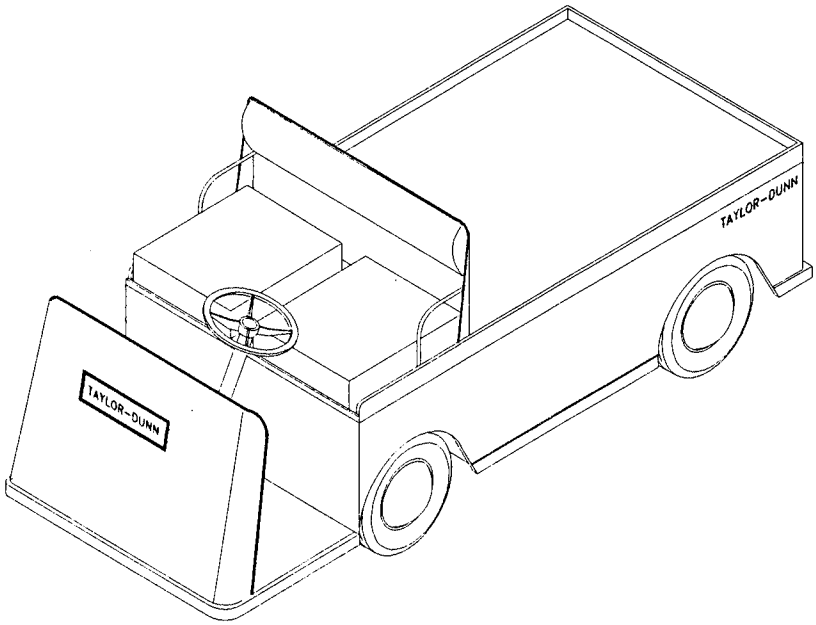

Taylor-Dunn Mfg. Standard Model B1-50 shown. This is the vehicle described and covered by this manual.

Standard Specifications

ITEM	SPECIFICATION
Standard Dimension	274.3L X 112.4 W X 120.6 H Centimeters 108L X 44.25 W X 47.5 H Inches
Bed Size	111.76W X 160.02L Centimeters 44W X 63L Inches
Dry Weight	551kg (Less Batteries) 1214Lbs.
Turning Radius	279.4Centimeters 110 Inches
Brakes	Rear Drum (Standard)
Motor	DC Series Wound, 6hp @ 1200 rpm
Tires	5.70 X 8 Load Range B
Tire Presure	60 psi max.
Maximum Load	726 kg (On Level Surface) 1600 Lbs. (On Level Surface)
Battery	6, 220 a.h. Batteries, 36-volt system
Charger	36-volt, 25-amp
Charge Time	8-12 hours, on batteries 80% discharged
Gradeability	15-percent (empty) 5-percent (loaded)
Towing Capacity	3402 kg 7500 Lbs.
Maximum Speed(Empty)	19-km/h 12-mi/h
Range(Unloaded)	32-kilometers 20-miles
Energy Consumption	264 watt/hr. per mile

Taking Delivery of Your Vehicle

You should inspect your vehicle immediately after delivery; use the following guidelines to inspect your vehicle for obvious problems:

- Examine the contents of all packages and accessories that may have come in separate packages with the vehicle.
- Make sure everything listed on the packing slip is there.
- Inspect all components of the packages for signs of damage.
- Examine all visible wires and the vehicle for obvious signs of damage.
- Check that all wire connections, battery cables, etc., are secure.
- Check battery cells to be sure they are filled.
- Check the tire pressure, tightness of lug nuts and for signs of obvious damage or wear.
- Check the operation of each of the following controls. They should operate smoothly without sticking or requiring undue effort:
    - Accelerator Pedal
    - Brake Pedal
    - Forward/Reverse Selector Switch
    - Battery Disconnect Switch (Optional)
    - Key-Switch
    - Parking Brake
    - Steering Wheel
    - Horn
    - Lights

What To Do If You Find a Problem

If there is a problem with the vehicle of any of the accessories that may have been shipped with the vehicle. File a claim with the carrier immediately. The claim must be filed within 48 hours of receiving the vehicle and the accessories. Forward a copy of the claim to your local Taylor-Dunn dealer.

The only personnel authorized to repair, modify or adjust any part of this or any Taylor-Dunn vehicle is a factory authorized service technician. All other personnel are expressly prohibited from working on, repairing, adjusting or modifying any part of this or any Taylor-Dunn vehicle.

⚠WARNING **Do not attempt to modify, adjust or repair any part of this vehicle unless you are authorized to do so. Incorrect repairs may result in injury to yourself and others. Incoorect or unauthorized repairswill result in the invalidation of your warranty.**

TAYLOR-DUNN® MFG.

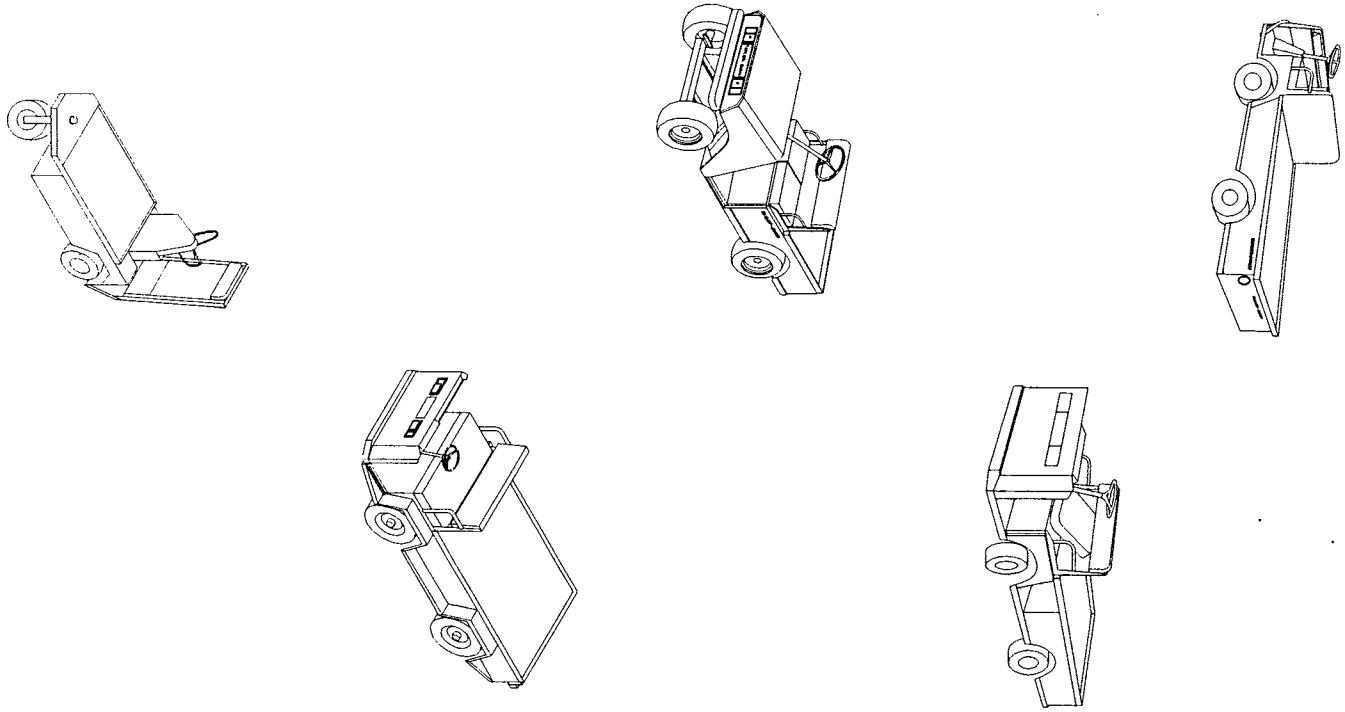

Safety Rules and Operational Information

Safety Rules and Guidelines

It is the responsibility of the owner of this vehicle to assure that the operator understands the various controls and operating characteristics of this vehicle. As well as, obeying the following safety rules and guidelines (extracted from the American National Standards Institute Personnel and Burden Carriers ANSI B56.8).

This vehicle is designed to be driven over smooth surfaces in and around places such as warehouses, nurseries, motels, parks, and resorts. Before you drive this vehicle, please

⚠WARNING

This vehicle is not designed to be driven on public highways. The truck travels on a level surface with no load at a speed of 12 mph. Do not exceed this speed. Exceeding this speed may result in steering difficulty, motor damage, and/ or loss of control. It is not designed to be towed more than 5 mph. Taylor-Dunn recommends the vehicle be placed on a flatbed truck rather than towing it behind another vehicle.

observe the following safety rules and guidelines:

- Do not drive this vehicle unless you are a qualified and trained operator.
- Keep all body parts (head, arms', legs') inside this vehicle while it is moving.
- Drive slowly when making a turn especially if the ground is wet slippery or when driving on an incline.
- This vehicle may overturn easily if turned sharply when driving at high speeds, especially when on an incline.
- Drive only on level surfaces or on surfaces having an incline of no more than 10% (5.6 degrees.).
- Do not drive over loose objects, holes, or bumps.
- Observe all traffic regulations and speed limits (15-mph max.).
- Keep to the right under normal conditions.
- Maintain a safe distance from all objects.
- Keep the vehicle under control at all times.
- Yield right of way to pedestrians, ambulances, fire trucks, or other vehicles in emergencies.
- Do not overtake another vehicle at intersections, blind spots, or other dangerous locations.
- Keep a clear view ahead at all times.

DRIVER TRAINING PROGRAM

The owner of this vehicle shall conduct an Operator Training program for all those who will be operating this vehicle. The training program shall not be condensed for those claiming to have previous vehicle operation experience. Successful completion of the Operator Training program shall be required for all personnel who operate this vehicle.

- The Operator Training program shall include the following:
- Operation of this vehicle under circumstances normally associated with your particular environment.
- Emphasis on the safety of cargo and personnel.
- All safety rules contained within this manual.
- Proper operation of all vehicle controls.
- A vehicle operation and driving test.

Driver Qualifications

Only those who have successfully completed the Operator Training program are authorized to drive this vehicle. Operators must possess the visual, auditory, physical, and mental ability to safely operate this vehicle as specified in the American National Standards Institute Controlled Personnel and Burden Carriers ANSI B56.8.

The following are minimum requirements necessary to qualify as an operator of this vehicle:

- Demonstrate a working knowledge of each control.
- Understand all safety rules and guidelines as presented in this manual.
- Know how to properly load and unload cargo.
- Know how to properly park this vehicle.
- Recognize an improperly maintained vehicle.
- Demonstrate ability to handle this vehicle in all conditions.

VEHICLE CONTROLS

The following describes the use of each control on this vehicle.

NOTE 1: SOME CONTROLS ARE OPTIONAL AND MAY NOT BE INSTALLED ON THIS VEHICLE.

Key-Switch

A key-switch located on the right side of the instrument panel turns on the vehicle. Rotate the key clockwise to turn the vehicle on counterclockwise to turn the vehicle off.

The key-switch should be in the off position and the key removed, whenever the operator leaves the driver's seat.

This switch is also designed to secure and disable the vehicle. You can remove the key ONLY when the key-switch is in the OFF position.

Seat Interlock Switch

A switch located under the driver's seat disables the vehicle when the driver leaves the seat. The driver must be seated for the vehicle to operate.

NOTE 2: THIS IS AN ADDED SAFETY FEATURE AND SHOULD NEVER BE BYPASSED.

Forward-Reverse Switch

The forward-reverse rocker switch, located on the dash, determines the direction of travel (forward or reverse) of the vehicle. Push the top of the switch to make the vehicle go forward. Push the bottom of the switch to go in reverse.

DO NOT SHIFT from forward to reverse or vice-versa while the vehicle is in motion. Make sure the vehicle is completely stopped before shifting.

The Forward-Reverse switch has a neutral position. The Forward-Reverse switch should be in the neutral position with the park brake set whenever the operator leaves the driver's seat.

Accelerator Pedal

The accelerator pedal located to the right of the brake pedal. It controls the speed of the vehicle, is designed for right foot operation only, operates the same way as the accelerator pedal in an automobile, and controls the vehicle's speed.

NOTE 3: DEPRESS THE PEDAL TO SPEED THE VEHICLE UP. RELEASE THE PEDAL TO SLOW DOWN.

Steering

The steering wheel and steering system is an automotive type. To turn right, turn the steering wheel to the right (clockwise). To turn left, turn the steering wheel to the left (counter clockwise).

Foot Brake Pedal

The foot brake pedal located to the right of the steering column is for operation with the right foot only. It works the same as the brake in an automobile. Applying pressure to the brake pedal slows the vehicle according to the amount of pressure you apply. Removing your foot from the pedal releases the braking action.

Park Brake Lever

The parking brake is actuated with a hand lever, which is located between the driver and passenger seats. To set the parking brake, push down on the brake pedal and pull the lever up until it locks. To release the park brake, pull up, push the release button, and lower the handle.

⚠CAUTION Do not operate the vehicle with the parking brake applied. Severe motor/control damage will result.

Horn Button

The horn button is located on the left side of the steering column on the floor board. Depress the button with your left foot to sound the horn, release it to turn it off.

Headlights and Accessories (Optional)

The headlight switch is located of the left side of the instrument panel. An accessory switch, if any, is adjacent and to the right of it.

Hour Meter (optional)

The hour meter is located to the right of the battery status indicator. This tracks the number of hours the vehicle has been in operation.

Battery Status Indicator

The battery status indicator is located to the right of the accessory switch. The normal operating range is in the green zone. The vehicle needs charging if it is in the yellow zone to the left. If it is in the red zone to the left, the vehicle should be taken out of service immediately to be charged.

Vehicle Operational Guidelines

Driving

- Slow and sound the horn when approaching a corner or other blind intersection.
- No horseplay or dangerous driving.
- Do not drive this vehicle in hazardous areas unless this vehicle is approved and labeled for such operation.
- Immediately report any accident or vehicle problem to your supervisor.

Loading and Unloading

- Do not load cargo that can easily fall off this vehicle.
- Do not exceed the cargo load capacity of this vehicle.
- Do not carry more than the maximum number of passengers allowed for this vehicle.
- Be extra careful when handling cargo that is longer, wider or higher than this vehicle.

Parking

- Set the parking brake and place shift switch in neutral before leaving the vehicle.
- If you will be away from this vehicle turn off the key-switch, remove the key and take the key with you.
- If you park this vehicle on an incline block the wheels.
- Do not block fire aisles, fire equipment, or stairways.

Towing

To tow these vehicles:

- Attach a tow strap to the front bumper tow-bar and place the forward/ reverse shift lever in the neutral position.
- Use another driver to steer this vehicle while it is being towed. Be sure the driver uses the brakes when the towing vehicle slows or stops.
- If at all possible, this vehicle should be placed on a flatbed truck rather than towing it. Exceeding the mi/h towing speed limit will result in damage to the vehicle.

⚠WARNING **Do not exceed 5 MPH or carry any passengers while towing this vehicle.**

Storing and Returning to Service

- Do not store batteries in a discharged condition. Fill, charge, and clean batteries fully before putting in storage
- Lube all grease fittings. Spray all exposed metal surfaces with a light oil.
- Clean and dry all exposed electrical connections.
- Inflate tires to proper pressure and then block them off the ground.
- If stored for a prolonged period the batteries should be charged as follows;

Storage Temperature	Charge
Below 40° F	Every 6 months
40° - 60° F	Every 2 months
Above 60° F	Once a month

Returning To Service

- Check state of charge of batteries and charge if necessary.
- Perform ALL maintenance checks in the periodic checklist in section 3.
- Test drive before putting into normal service.

TAYLOR-DUNN® MFG.

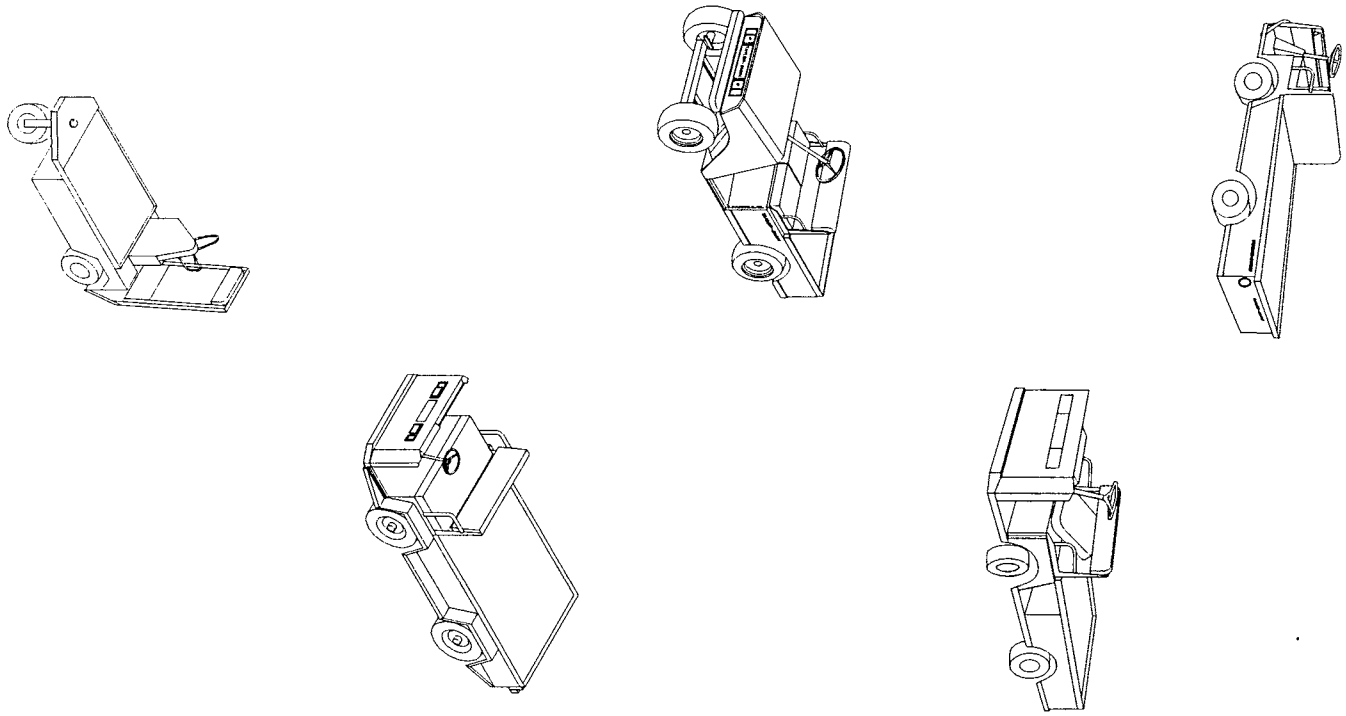

Maintenance and Service Procedures

Maintenance

This section explains how to perform the scheduled maintenance procedures. Use the Maintenance Checklist to determine how often you should perform each procedure. Vehicle maintenance or repairs should only be performed by a qualified mechanic.

This section contains the following:

- Maintenance guidelines.
- Maintenance checklist.
- Lubrication chart.
- Troubleshooting guide.
- Detailed maintenance procedures.

Maintenance Guidelines

Allow only qualified and authorized personnel to maintain repair adjust and inspect the vehicle.

- Before starting any repairs or maintenance immobilize the vehicle by turning the key switch off, removing the key and setting the park brake.
- Disconnect both of the main battery leads before working on or disconnecting any electrical component or wire.
- Block the chassis with jack stands before working under a raised vehicle.
- Conduct vehicle performance checks in an authorized area where safe clearance exists.
- Before starting the vehicle, follow the recommended safety procedures in Section 2, "Safety Rules and Operational Information."
- Avoid fire hazards and have fire protection equipment present in the work area. Do not use an open flame to check level or leakage of battery electrolyte. Do not use open pans of fuel or flammable fluids for cleaning parts.
- Ventilate the work area properly.
- Regularly inspect and maintain in a safe working condition, brakes, steering mechanisms, speed and directional control mechanisms, warning devices, lights, governors, guards and safety devices.
- Inspect and maintain battery limit switches, protective devices, electrical conductors and connections in conformance with Taylor-Dunn's recommended procedures.
- Keep the vehicle in clean condition to minimize fire hazards and facilitate detection of loose or defective parts.

Severe Duty Guidelines:

If the vehicle is operated under "severe conditions," service procedures should be conducted more frequently then specified in the "Periodic Maintenance Checklist" on the next page, which covers maintenance under normal conditions. The frequency of service under severe conditions is determined by the use of the vehicle. The owner/ operator must evaluate the operating environment to determine the increase in maintenance frequency.

For Example:

If any one of the conditions below is present, the periodic maintenance should be conducted at least twice as often. Additional conditions will require more frequent maintenance.

In addition the whole vehicle should be inspected monthly for signs of damage. The damage must be repaired immediately.

The following list is meant as a guide and is not all-inclusive:

SEVERE CONDITIONS refer to operation:

- In extreme temperature.
- On bumpy, dusty, or ill maintained roads.
- In excessively wet areas.
- In corrosive or contaminated areas.
- Frequent loading of vehicle at/near capacity.
- On multiple shifts.

Periodic maintenance Cheklist

Maintenance Item	Weekly (20 hrs)	Monthly (80 hrs)	Quarterly (250 hrs)	Semi-Annually (500 hrs)	Annually (1000 hrs)
Check Condition of Tires	X				
Check & Fill Batteries	X				
Check Brake System		X			
Check Steering System		X			
Lubricate Vehicle			X		
Clean & Tighten All Wire Connections			X		
Wash & Service Batteries			X		
Check Park Brake				X	
Check Front Wheel Bearings				X	
Check Rear Axle Oil				X	
Check Motor Brushes and Blow Out the Motor				X	
Change Rear Axle Oil					X
Check & Tighten All Nuts and Bolts					X
Clean & Repack Front Wheel Bearings					X

NOTES

B1-50 LUBRICATION CHART

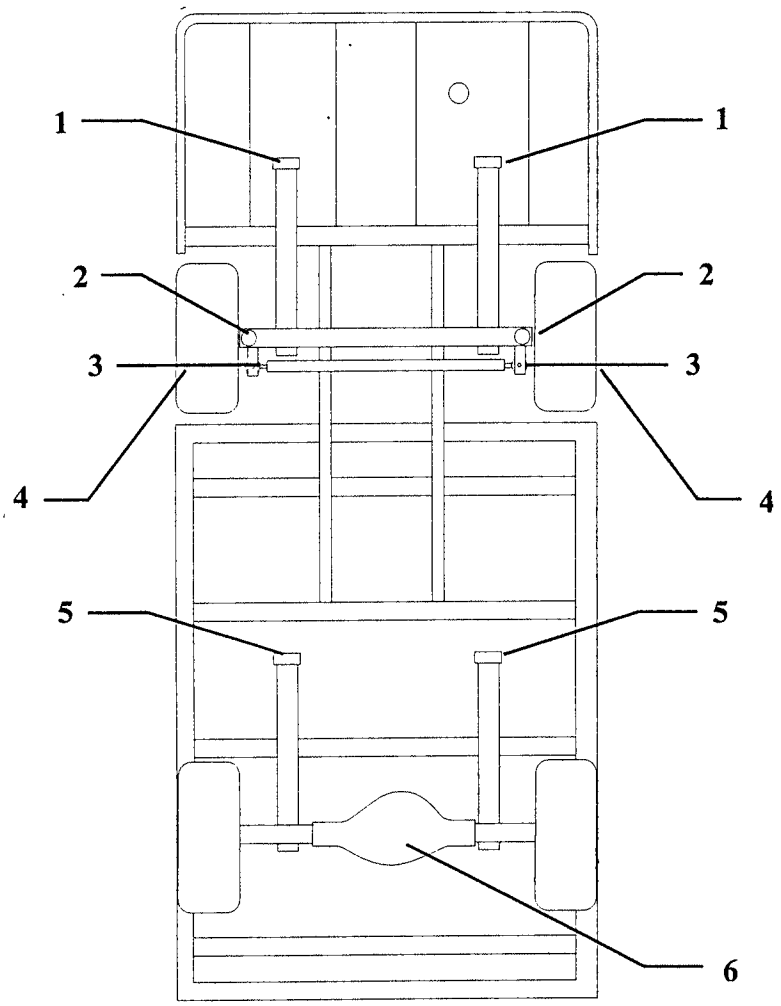

#	Description	Locations	Lubricant Type
1	Front Leaf Springs	2	General Purpose Grease
2	King Pin	2	General Purpose Grease
3	Ball Joints	6	General Purpose Grease
4	Front Wheel Bearings	2	High Temperature Wheel Bearing Grease
5	Rear Leaf Springs	2	General Purpose Grease
6	Drive Drain Plug	1	10 oz. 30 wt. Motor Oil

TROUBLESHOOTING GUIDE

Symptom	Probable Cause
Steering Pulls in One Direction	Front End Out of Alignment
	Low Tire Pressure
Hard Steering	Dry Lube Points in Steering Linkage
	Damaged King Pin/Ball Joint
	Low Tire Pressure
	Steer Gear Needs Adjusting
	Steer Gear Needs To Be Replaced
Excessive Steering Play	Worn Ball Joints
	Mis-Adjusted or Worn Steering Gear
	Loose Steering Linkage
	Steer Gear Needs Adjusting
	Steer Gear Needs To Be Replaced
Lack of Power or Slow Operation	Brakes or Parking Brakes Dragging
	Worn Drive Gears
	Front End Out of Alignment
	Defective Speed Control or Motor
	Defective Batteries or Charger
Abnormal Noise	Worn Drive Gears or Bearings
	Worn Front /Rear Axle Bearings
	Loose Lug Nuts
	Motor Bearings Worn
Oil Leak in Rear Bearing Area	Rear Wheel Bearing and/or Gasket Failed
	Drive Over Filled
Brake Pedal Soft or Spongy	Adjust Brakes
Brake Pedal Low	Brake Worn (1/16" Wear Limit)
	Brakes Out of Adjustment
Braking Power Low	Brake Worn (1/16" Wear Limit)
	Brake Shoes Contaminated with Fluid
	Brake Pedal Linkage Binding
	Brakes Out of Adjustment

Mechanical Rear DrumBrakes (Standard)

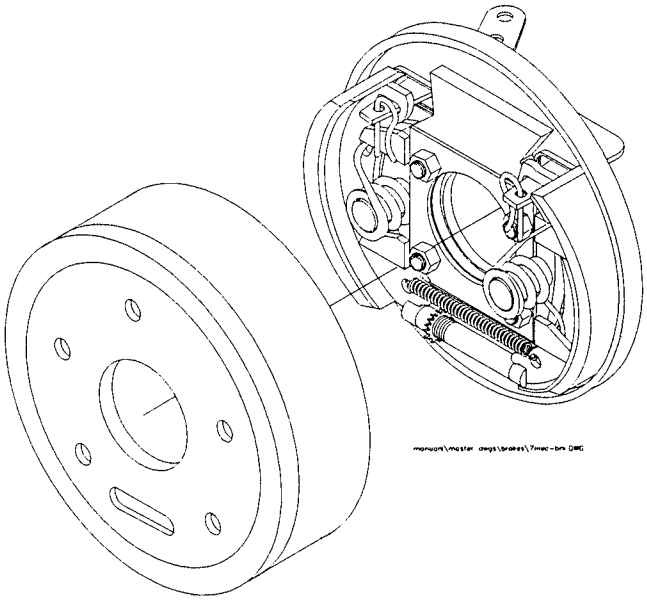

Brakes

This section covers the installation and repair of the brake system that is installed on the B1-50. This vehicle comes equipped with standard mechanical rear brakes only.

Be sure that you are fully aware of the brake system installed on the vehicle you are working on, before continuing.

⚠WARNING

The OEM does not supply asbestos fiber-brake pads/ shoes with this or any vehicle. However, there is the possibility that the OEM brake pads/shoes were replaced with those containing asbestos fibers. Since this possibility does exit the brake pads should be handled as if, they do contain asbestos.

Never use an air hose or dry brush to clean brake assemblies. Use an OSHA, approved vacuum cleaner or any alternate method approved by OSHA to minimize the hazard caused by airborne asbestos fibers and brake dust.

Do not grind, sand, break, or chisel the brake pads/ shoes as this will cause unnecessary dust possibly releasing asbestos fibers into the air.

Always wear protective clothing and a face shield when working on the brake pads.

Inhaled asbestos fibers have been found to cause cancer and respiratory diseases.

Do not drive the vehicle if any worn or broken part is detected in any part of the brake system. The cause of the damage must be repaired immediately.

NOTE 1: When applying or releasing the park brake the foot pedal must be depressed in order to relieve undue stress on the park brake lever and its linkage. Failure to do this will cause undue wear on the park brake lever and its parts.

Standard Mechanical Rear Drum Brakes

This vehicle comes standard with rear mechanical drum brakes. Here we will cover the servicing of the those parts that are unique to these brakes.

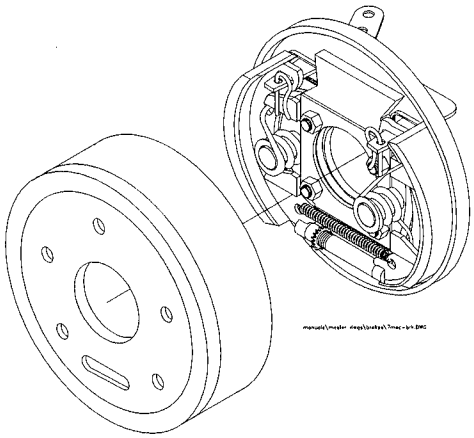

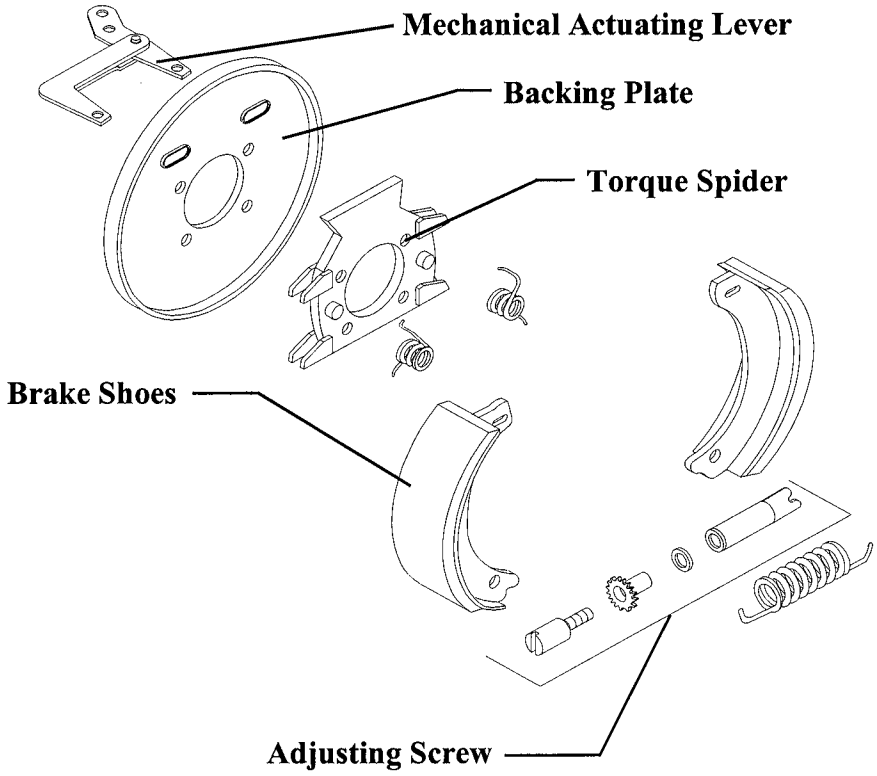

Brake Figure 1: Mechanical Brake

Mechanical Brake Linkage Adjustment

If the brake pedal travels to the floorboard you should refer to "Rear Drum Brake Adjustments," on page 2-14. However the linkage may require some adjustment under special crcumstances. In order to adjust the linkage use the procedure below:

> NOTE 1: The brake shoes should be inspected and replaced, if necessary, before any adjustments are made.

To adjust the mechanical brake linkage:

1. Place blocks under the wheels to prevent vehicle movement.
2. Disconnect the main positive and negative at the batteries.
3. Loosen the jam nut on the brake rod.
4. Rotate the brake rod until the linkage is tight, and without any brake drag.
5. Tighten the jam nut on the brake rod being sure the link does not turn.
6. Test drive the vehicle, checking for even braking. Additional adjustment may be required for balanced braking.

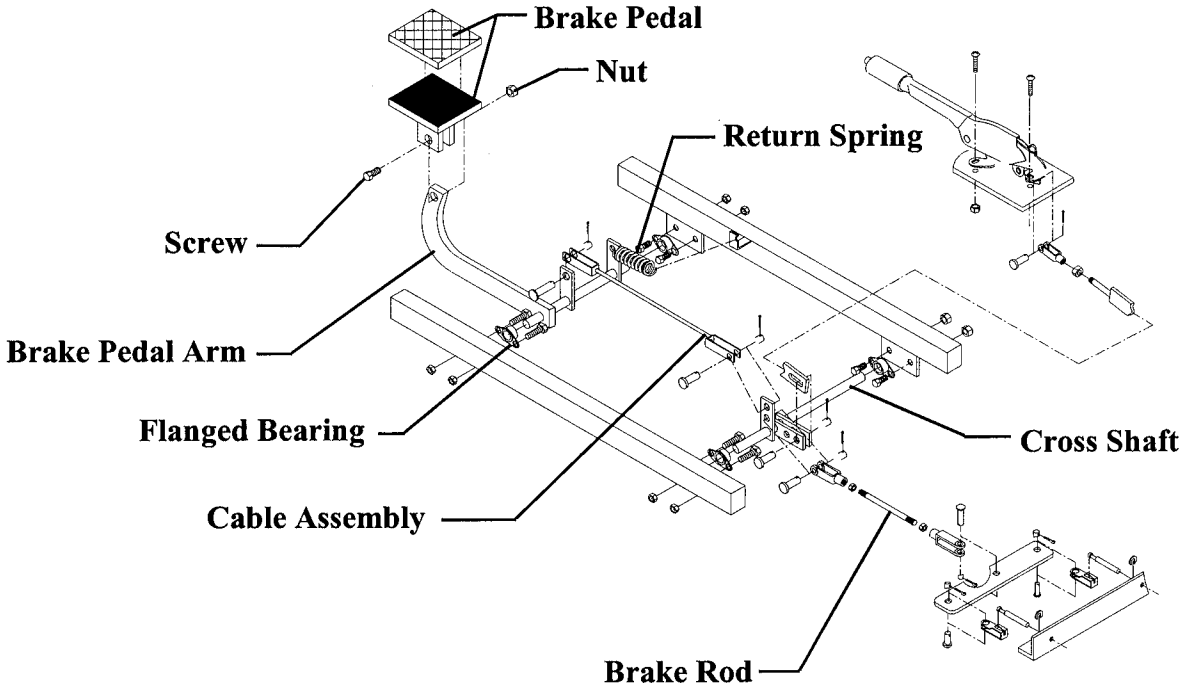

Brake Figure 2: Mechanical Brake Linkage

Rear Brake Replacement (Mechanical)

The mechanical brakes are not self adjusting, and do require periodic adjustment. After replacing or servicing these brakes be sure to readjust them as needed. (Refer to "Rear Drum Brake Adjustment , on page 2-14.)

To replace the rear brakes:

1. Place blocks under the front wheels to prevent vehicle movement.
2. Disconnect the main positive and negative at the batteries.
3. Raise the rear of the vehicle and support with jack stands (see WARNING!- this page).
4. Remove the rear tires from each side of the vehicle.
5. Disconnect the clevis's holding the brake cables to the brake actuators on each of the backing plates.
6. Remove the brake drums.

⚠WARNING **Always use a lifting strap, hoist, and jack stands, of adequate capacity to lift and support the vehicle. Failure to use lifting and support devices of rated load capacity may result in serious injury.**

7. Inspect the brake drums and shoes for signs of wear, and replace as needed.

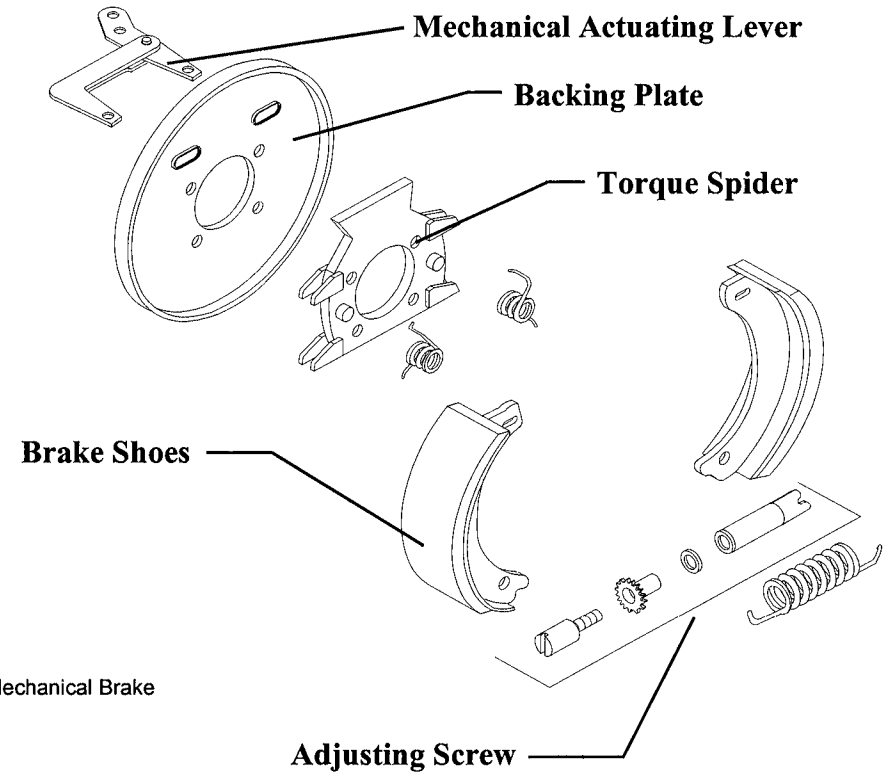

Brake Figure 2:Mechanical Brake

Replacing the Brake Pedal and Linkage

To replace the brake pedal or linkage:

1. Place blocks under the front wheels to prevent vehicle movement.
2. Disconnect the return spring from the brake pedal arm .
3. Remove the pedal from the brake pedal arm.
4. Disconnect the cable assembly from the brake pedal arm.
5. Remove the flanged bearings holding the brake pedal arm in place, and remove the brake pedal arm. (Replace as necessary.)
6. Remove the cable assembly from the cross shaft, and replace as necessary.
7. Reinstall all brake and linkage components by reversing the procedure above. Always use new cotter pins **(see WARNING!).**

   NOTE 2: If adjustment is necessary, follow the 'Mechanical Brake Adjustment' Procedure

⚠WARNING **Always use new cotter pins. Cotter pins used more than once are weakened and may break, resulting in linkage and brake failure.**

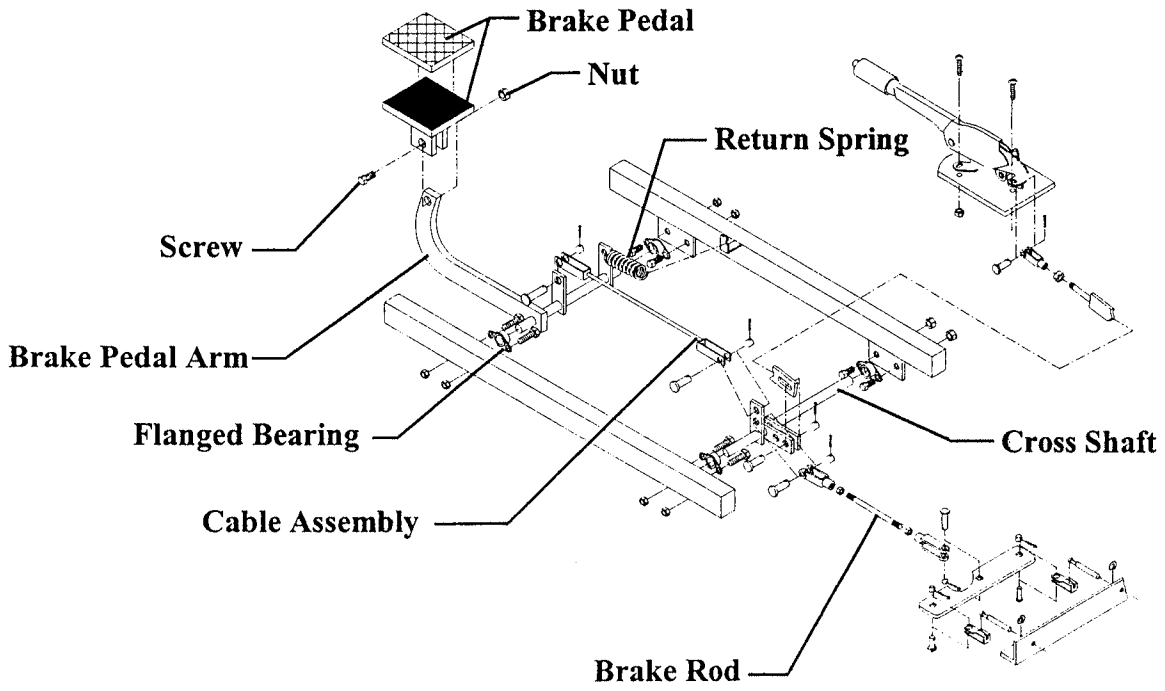

Brake Figure 3: Brake Linkage

Rear Drum Brake Adjustments

The adjustments for the drum brakes are as follows:

To adjust the rear brakes:

1. Place blocks under the front wheels to prevent vehicle movement.
2. Disconnect the main positive and negative at the batteries.
3. Raise the rear of the vehicle and support with jack stands (see WARNING!- this page).
4. Remove the rear tires from each side of the vehicle.
5. Align the adjusting slot on the brake drum with the star wheel.
6. Insert a brake adjusting spoon into the adjusting slot in the brake drum.

⚠WARNING

Always use a lifting strap, hoist, and jack stands, of adequate capacity to lift and support the vehicle. Failure to use lifting and support devices of rated load capacity may result in serious injury.

7. Turn the star wheel until the brakes lock the wheel.
8. Back off the star adjusting nut until the wheel spins freely with a minimum of drag.
9. Repeat steps 5 through 8 for the other side.
10. Lower the vehicle, and test drive. (If the brakes do not brake evenly then repeat this procedure.)

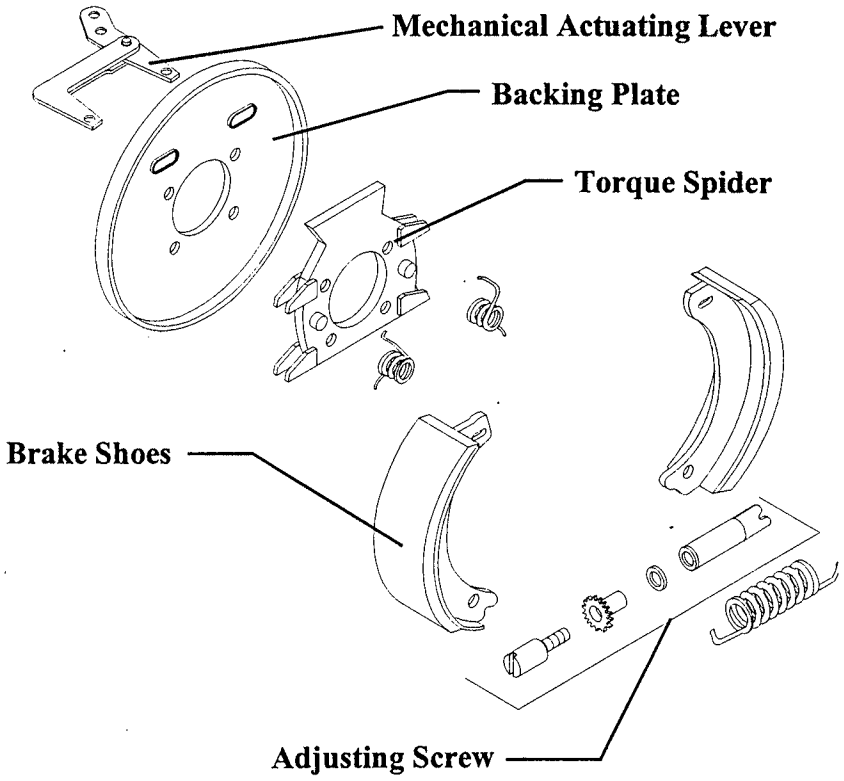

The Star Wheel and The Adjusting Slot on the brake drum must be lined up in order to make adjustments

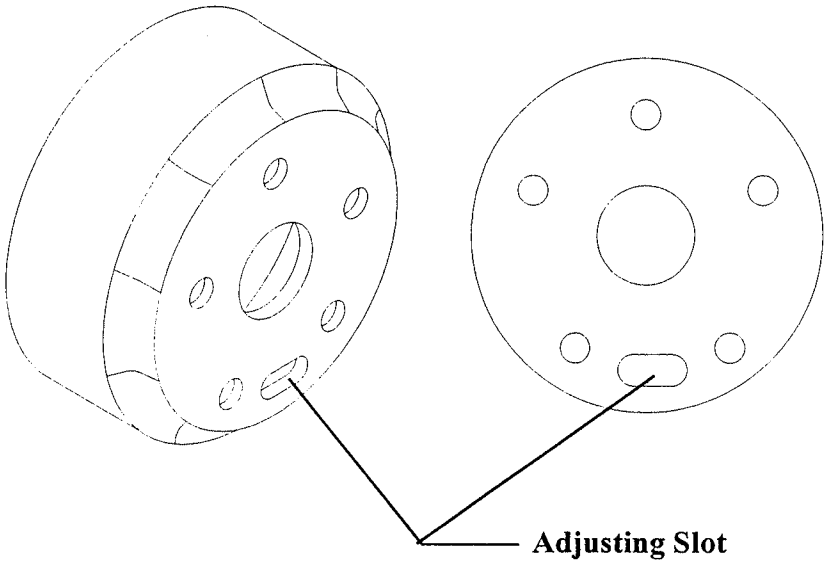

Brake Shoe Removal

In order to remove the brake shoes use the following procedure:

1. Follow steps 1 through 5 on page 2-12.
2. Remove the retracting spring and the hair pins holding the actuating lever to the brake shoes. (**Do Not Reuse** the Hiarpins once they have been removed.)
3. Remove the torsion down springs from each shoe.
4. Remove the brake shoes, and the adjuster assembly from the backing plate.
5. Clean the adjuster assembly, and install new shoes in reverse order.
6. Adjust the brakes, lower, and test drive.

⚠WARNING

Always use a lifting strap, hoist, and jack stands, of adequate capacity to lift and support the vehicle. Failure to use lifting and support devices of rated load capacity may result in serious injury.

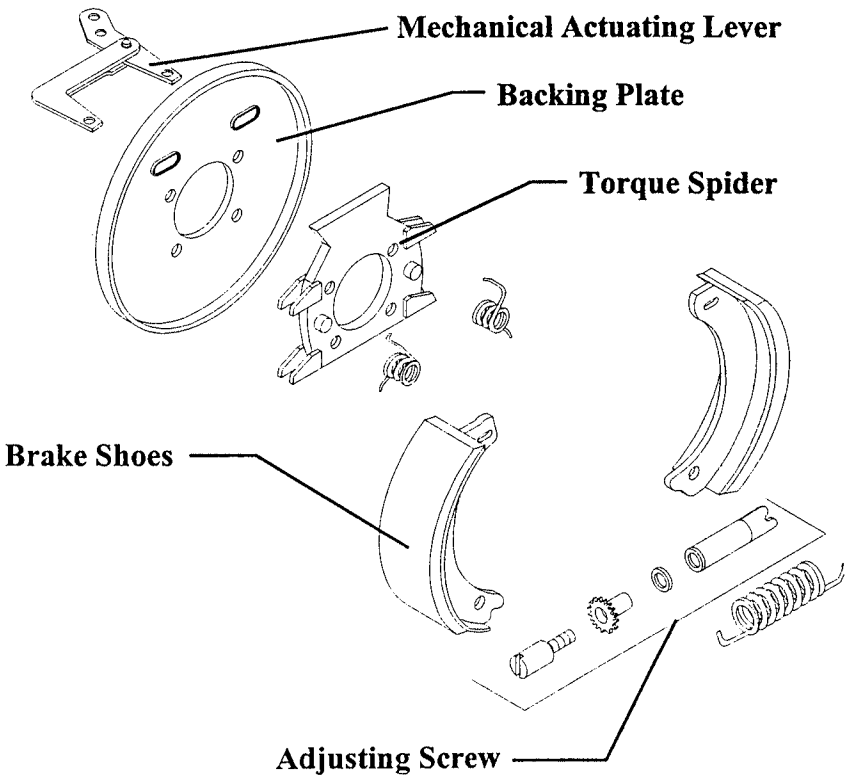

NOTES

Parking Brake

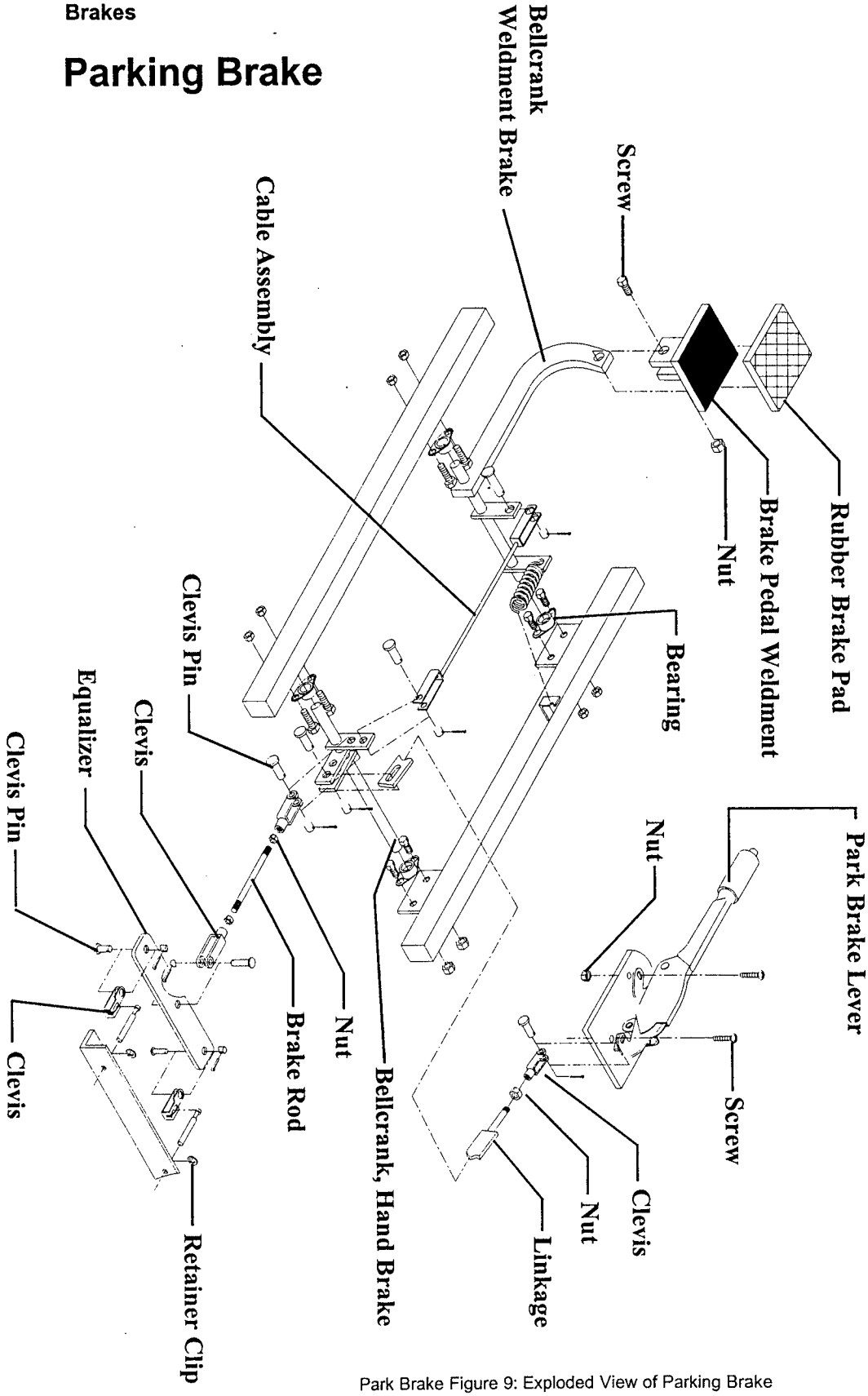

Park Brake Figure 9: Exploded View of Parking Brake

Park Brake Adjustment

This adjustment should be made only if the park brake lever or linkage has been replaced. Other than this instance there is no need to make adjustments to the park brake lever linkage. If you do replace the park brake linkage, refer to the figure on the previous page and follow the procedure below.

NOTE 8: The brake linkage and brakes must be properly adjusted before adjusting the park brake linkage.

1. Place blocks under the wheels to prevent vehicle movement.
2. Disconnect the main positive and negative at the batteries.
3. Loosen the jam nut at the clevis attached to the park brake lever.
4. Remove the clevis pin and rotate the clevis so that when reconnected, the park brake lever engages the ratchet lock on the second to fifth tooth.

   NOTE 9: Before pulling up on the park brake lever be sure to apply pressure to the foot brake first. Then pull straight up on the lever. This will reduce the stress on the linkage rod and the park brake lever.
5. Reinstall the clevis pin. **Always use new cotter pins (see WARNING!).**
6. Tighten the jam nut at the clevis.

⚠WARNING

Always use new cotter pins. Cotter pins used more than once can become weak or broken. Failure to use new cotter pins may cause the ball joint to become disconnected resulting in loss of steering and serious injury

NOTES

Front Axle and Steering

The steering system consists of the steering wheel, column or tower, shaft, steering gear, pitman arm, drag link, pivot plate, and tie rods. Some of these parts are shown complete in the figure below. Study these parts and their locations for future reference. This figure or portions of it are duplicated in the appropriate locations to effect any repairs or services to the steering of this vehicle.

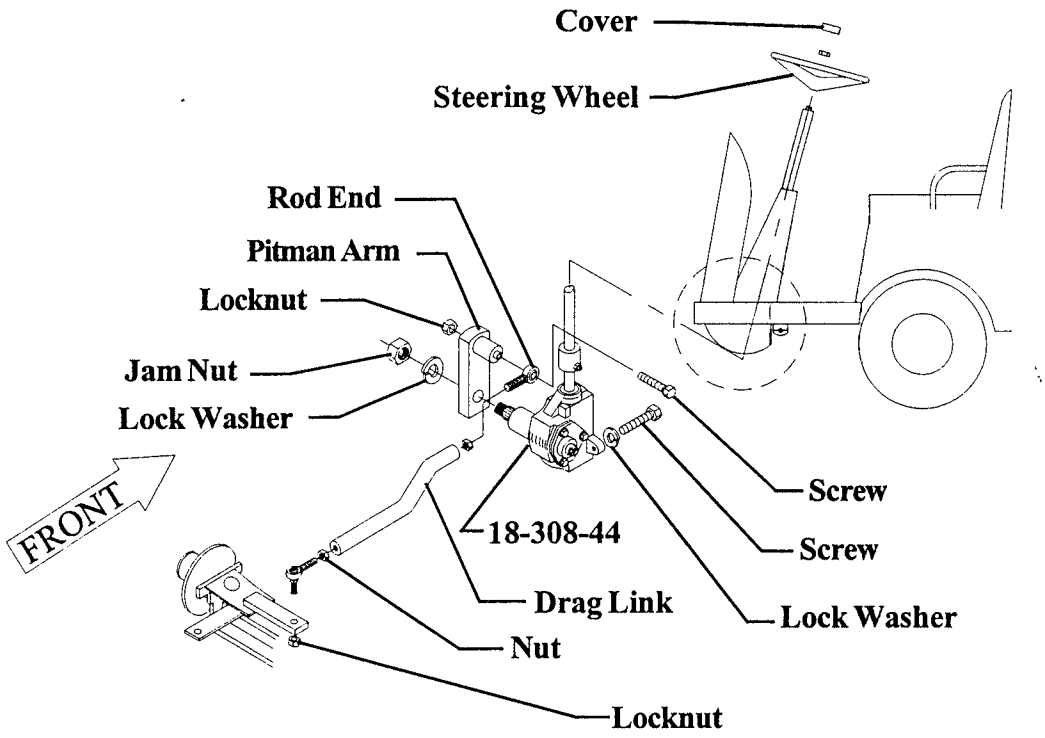

Front Axle Figure 8: Steering Components

Front Axle and Steering

Axle Removal

1. Disconnect the batteries.
2. Block the rear wheels to prevent the truck from rolling.
3. Lift the front end and support with jack stands.
4. Remove both front wheels.
5. Remove the drag link from the steering yokes.
6. Remove the bolts holding the leaf springs to the axle.

   NOTE 1:Support the axle with additional stands or tie it up to the frame to prevent it from falling.

7. Remove the bolts from the shock mounts on the axle. (If Equipped.)
8. Remove the axle from the truck.

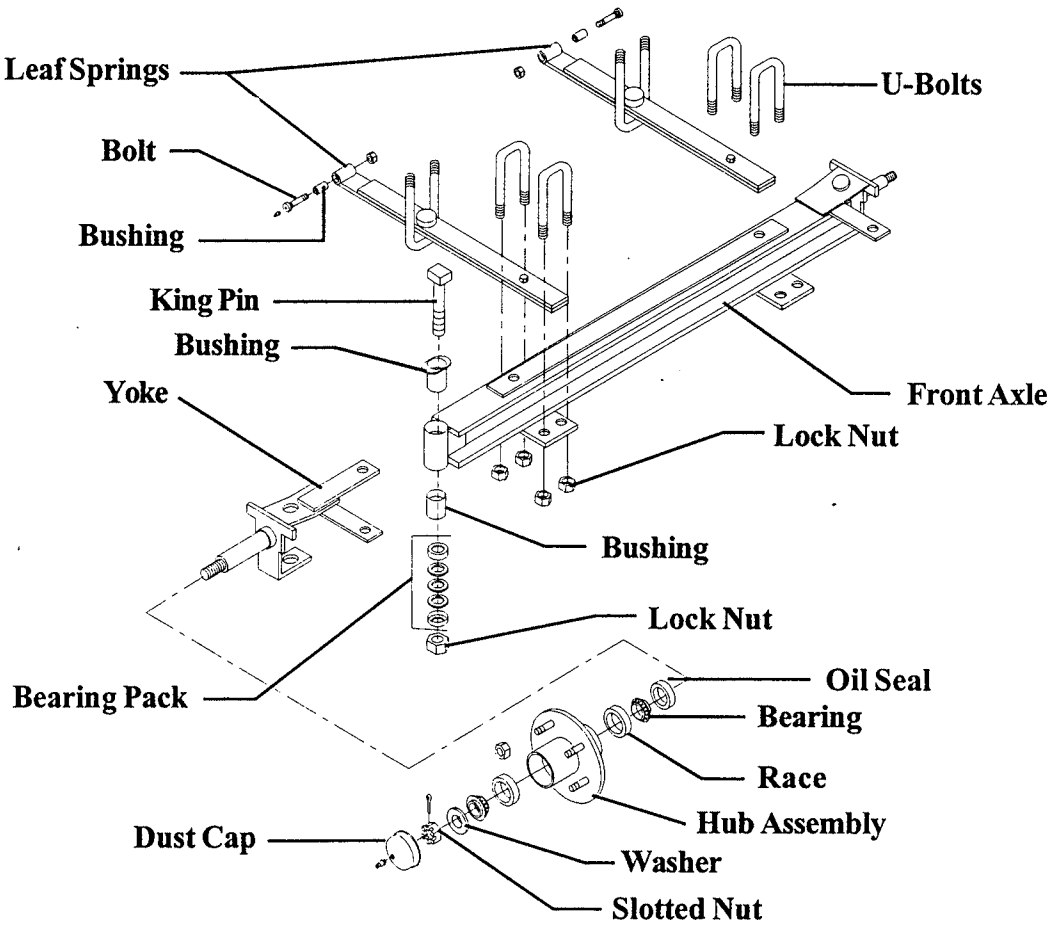

Front Axle Figure 1: Front Axle and Suspension

Axle Installation

1. Install in reverse order.
2. Tighten the U-Bolts snugly. The spring should not pivot.
3. Tighten the drag link ball joint to 40-45 ft. lbs.
4. Lower the vehicle and test drive.

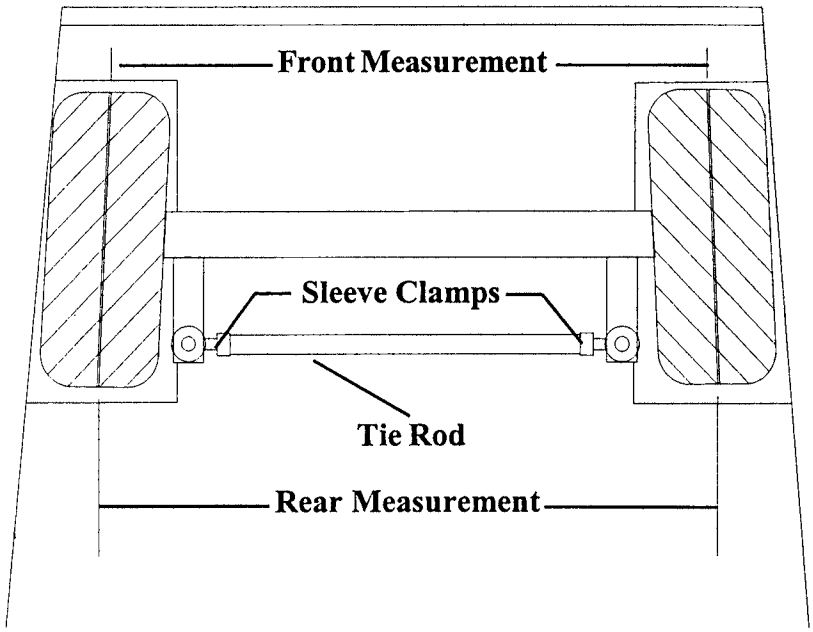

Front Axle Figure 2: Toe-In

Aligning the Front End

NOTE 2: Caster and camber are set at the factory and do not require adjustment.

1. Raise the front end of the vehicle and support with jack stands.
2. Center the steering. (Refer to the Figure above.)
3. With a piece of chalk, mark a line around the center of both tires by holding the chalk against the tire while turning the wheel.
4. Loosen the ball joint clamps at each end of the tie rod so the adjusting sleeve can be turned.
5. Lower front end back on the ground.
6. With the wheels in the straightforward direction measure the distance between chalk lines at the front and the rear of the tires.
7. Adjust the tie rod sleeve until the distance from mark to mark across the front of the tires is the same as the distance from mark to mark across the rear.
8. Tighten the ball-joint clamp nuts securely.

Centering the Steering

1. Remove the pitman arm from the steering gear.
2. Check and adjuste toe-in.
3. Align the front wheels straight ahead and tie or clamp in position.
4. Center the steering gear.
   a.) Turn the gear all the way to the left.
   b.) Turn back three turns, and tie it off so it can not move.
5. Install the pitman arm while keeping the front wheels in the straight-ahead position. Tighten nut to 70-ft lbs.
6. Remove and center the steering wheel on the steering shaft while keeping the front wheels in the straight-ahead position.

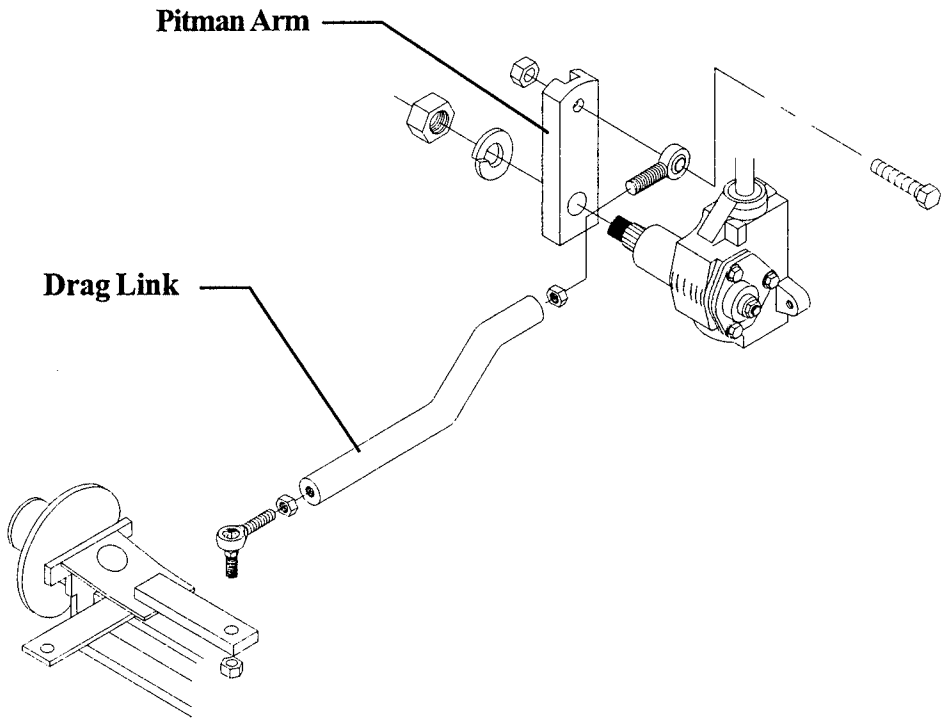

Front Axle Figure 3: Drag Link and Pitman Arm

6. Install the steering wheel nut and cap.

Repairing the Front Axle

Steering Yoke/Bushings

1. Remove the bearing cap, spindle nut and the wheel/hub assembly.

   NOTE 3: Catch the outer bearing as it falls out. Then remove the drag links from the yoke (only if the yoke is to be replaced).

2. While supporting the yoke, remove the kingpin nut, king pin and bearing pack.
3. Remove the yoke from the axle.
4. Clean and replace as necessary all bearings, nuts, washers and bushings.
5. Install in reverse order.
6. Tighten the kingpin nut .

   NOTE 4: The bearing pack must be orientated correctly.

7. Tighten the drag link ball joint nut (if it was removed) to 40-45 ft. lbs. Use a NEW cotter pin.
8. Repack the wheel bearings.
9. Install the front wheel.
10. Tighten spindle nut to 30-ft. lbs. to seat bearings.
11. Back off spindle nut one flat, until the hub turns, but is not loose. Then install a NEW cotter pin.
12. Install the bearing cap.

Wheel Bearings

1. Remove the tire/wheel assembly
2. Remove the bearing cap and spindle nut.
3. Remove the hub from the spindle.

   NOTE 5: Catch the outer bearing as it falls out

4. Clean all grease from the inside of the hub and bearings.
5. Inspect and replace the races and bearings as a set.

   NOTE 6: It is recommended to replace both the left and right wheel bearings at the same time.

6. Assemble in reverse order, using new grease seals.
   a.) Pack inner and outer bearings with grease.
   b.) Tighten the spindle nut to 30-ft. lbs. while rotating the hub to seat bearings.
   c.) Back off spindle nut one flat, until the hub turns, but is not loose. Then install a NEW cotter pin.
7. Install the bearing cap.

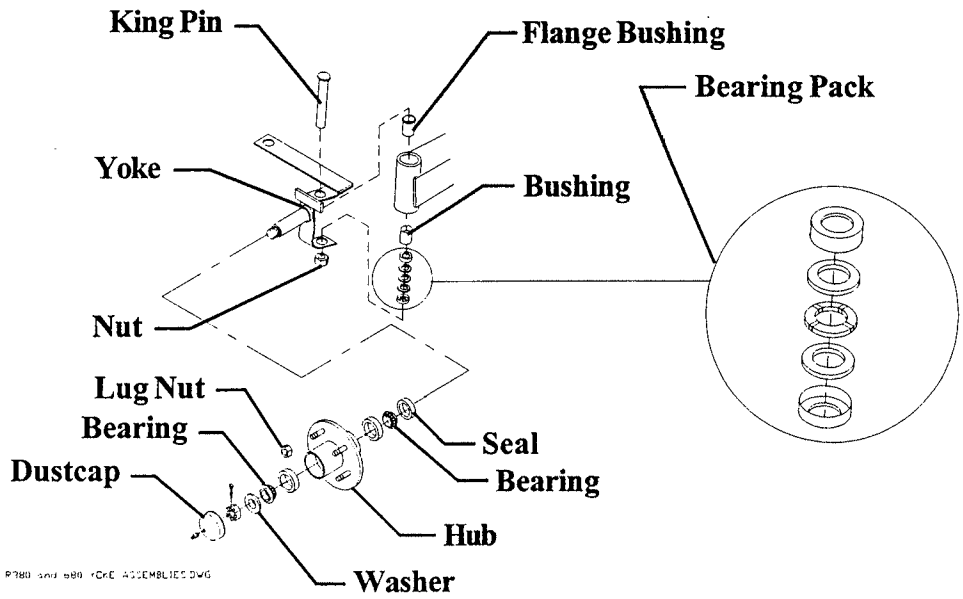

Front Axle Figure 4: Yoke Assembly

Ball Joints

NOTE 7: It is recommended to replace all the ball joints as a set.

1. Loosen the ball joint clamp. Note its position on the sleeve.
2. Remove the ball joint nut, and then remove the ball joint using a pickle fork.
3. Count the number of turns while removing the ball joint from the drag link or tie rod.
4. Lightly lubricate the threads on the new ball joint and install into the drag link or tie rod counting the same number of turns as when removed.
5. Install the ball joint into the steering arm and tighten nut to 40-45 ft, lbs. Use a NEW cotter pin.
6. Lube the new ball joint.
7. Realign the front wheels.
8. Tighten the ball joint clamps securely.

NOTE 8: Make sure the clamps are in their original position noted in step 1. Turn the steering all the way from left to right to make sure there is no interference.

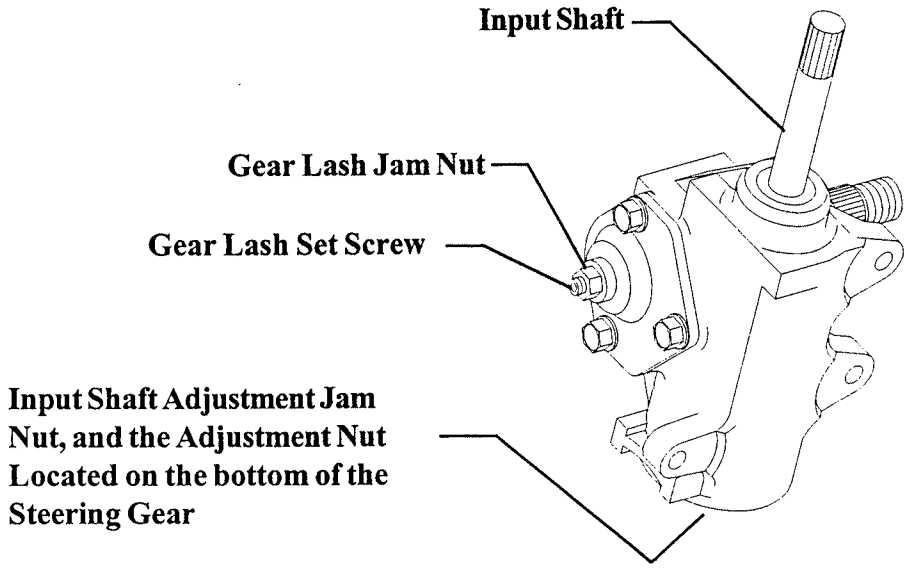

Front Axle Figure 5: Steering Gear

Steering Gear Adjustment

Endplay

1. Back off the gear lash screw.
2. Loosen the jam nut.
3. Tighten the adjusting nut so that there is no endplay or wobble in the input shaft.
4. Tighten the jam nut.

Gear Lash

1. Remove the pitman arm. Note its position.
2. Loosen the jam nut for the gear lash set screw.
3. Tighten the setscrew so that there is a slight drag when the steering gear passes through the center of its travel (about three- (3) turns from lock).
4. Tighten the jam nut. Do not allow the setscrew to turn while tightening.
5. Install the pitman arm in its original position. Tighten to 70-ft. lbs

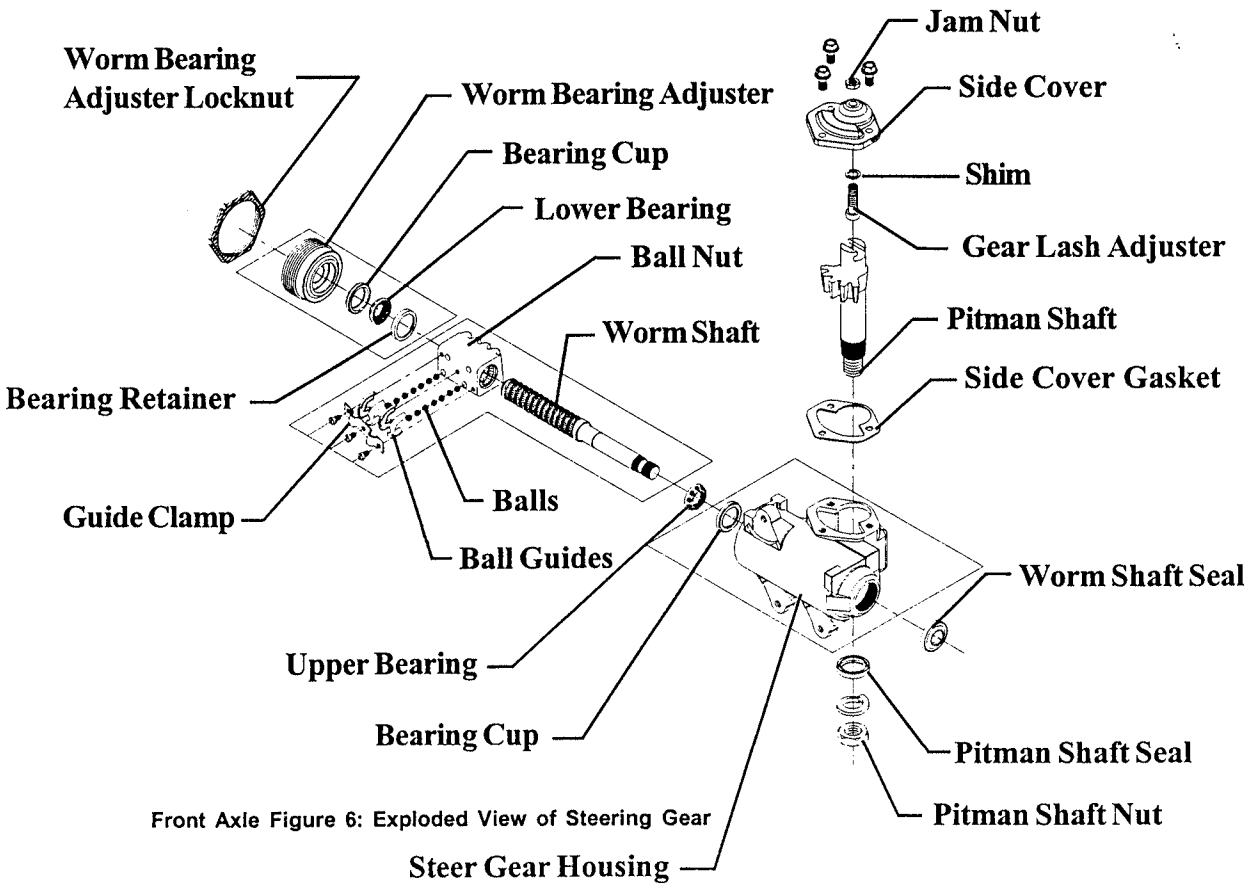

Front Axle Figure 6: Exploded View of Steering Gear

Front Axle and Steering

In this segment, we will discuss how to remove and replace these parts from the steering system, with the exception of removing the steering wheel. The steering system has been designed for the easy removal and replacement of parts.

To Remove the Steering Wheel

In order to remove the steering wheel refer to the following procedure:

1. Turn the key-switch off and disconnect the battery.
2. Place Blocks under the rear wheel to prevent vehicle movement.
3. Remove the cover from the center of the steering wheel.
4. Using a slide hammer, remove the horn button collar.
5. Remove the nut from the center of the steering wheel.
6. The steering wheel may have to be hit with a dead blow hammer in order to free it from the steering shaft.

In order to install a new steering wheel reverse the order of the procedure above.

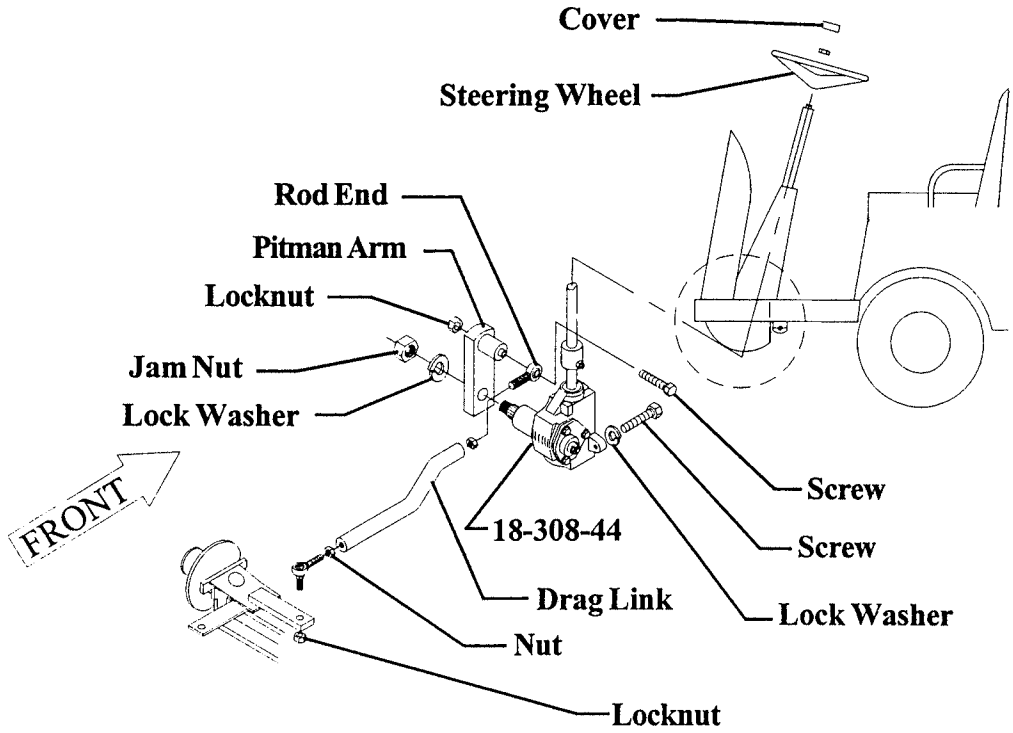

Front Axle Figure 9: Steering Assembly

To Remove the Steering Column or Tower

To remove these components of the steering system, use the following procedure and refer to Figures 10 and 11.

1. Place blocks under the rear wheels to prevent vehicle movement.
2. Disconnect the main positive and negative at the battery.
3. Disconnect the wire plug going to the horn button. (If so equipped.)
4. Remove the cover from the right side of the steering tower and the four bolts holding the tower to the floorboard.
5. Loosen the clamp at the base of the steering shaft and remove the bolt from the clamp.
6. Remove the steering column and tower from the vehicle.

NOTE 9: When the steering column and tower are removed the horn wire and steering wheel will come off as well. Be sure that you have disconnected the horn wire before removing the tower and column.

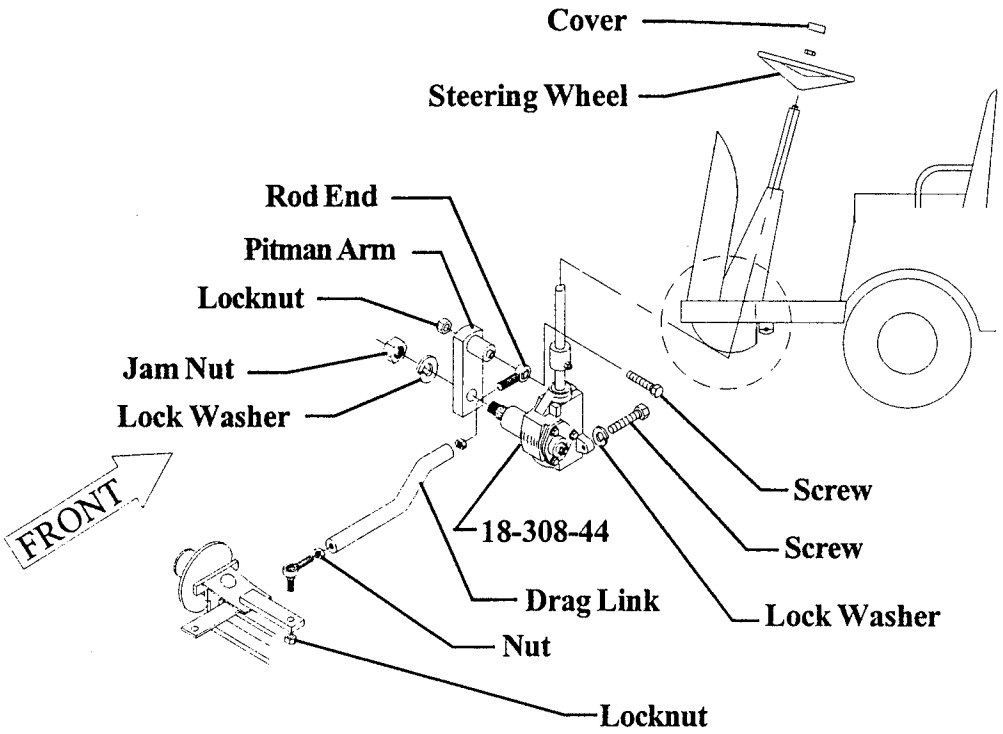

Front Axle Figure 10: Steering Assembly

To Reinstall the Steering Column/Tower

At this point, the vehicle should still have blocks behind the wheels and the front end raised and being supported by jack stands. The pitman arm is on the steering gear and the other remaining parts are installed.

To replace the steering column and tower follow these procedures:

1. Remove the jack stands and lower the vehicle to the ground. With the blocks still in place behind the wheel and the battery still disconnected.
2. Turn the steering wheel so that is aligned properly and the wheels are straight ahead. See Front Axle Figure 11.
3. Put the steering column and tower assembly into place. Line up the clamp at the end of the steering column. With the steering gear input shaft.
4. Insert the bolt into the clamp and tighten the clamp on the input shaft.
5. Line up the holes in the base of the steering tower with those on the floorboard and insert the bolts.

⚠WARNING **Always use new locknuts and bolts. Locknuts and bolts become less effective if used more than once. If the locknuts or bolts holding come loose, serious injury may occur.**

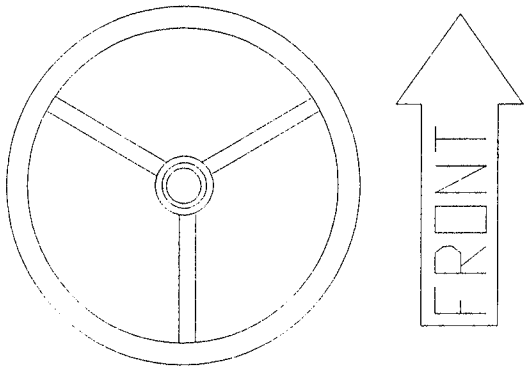

Front Axle Figure 11: Position of Steering Wheel

Removal of Steering Gear

For the proper removal of the steering gear, use the following procedure:

1. Place blocks under the front wheels to prevent vehicle movement.
2. Disconnect the main positive and negative battery terminals from the battery.
3. Raise the front of the vehicle and support it with jack stands.

⚠WARNING **Always use a lifting strap, hoist and jack stands of adequate capacity to lift and support the vehicle. Failure to use lifting and supporting devices of rated load capacity to support the vehicle may result in serious injury and property damage.**

4. Remove the cover from the right side of the steering tower/column and remove the bolt from the clamp on the end of the steering shaft.
5. Remove the drag link from the pitman arm.
6. Remove the three bolts holding the steering gear to the frame and then remove the gear.

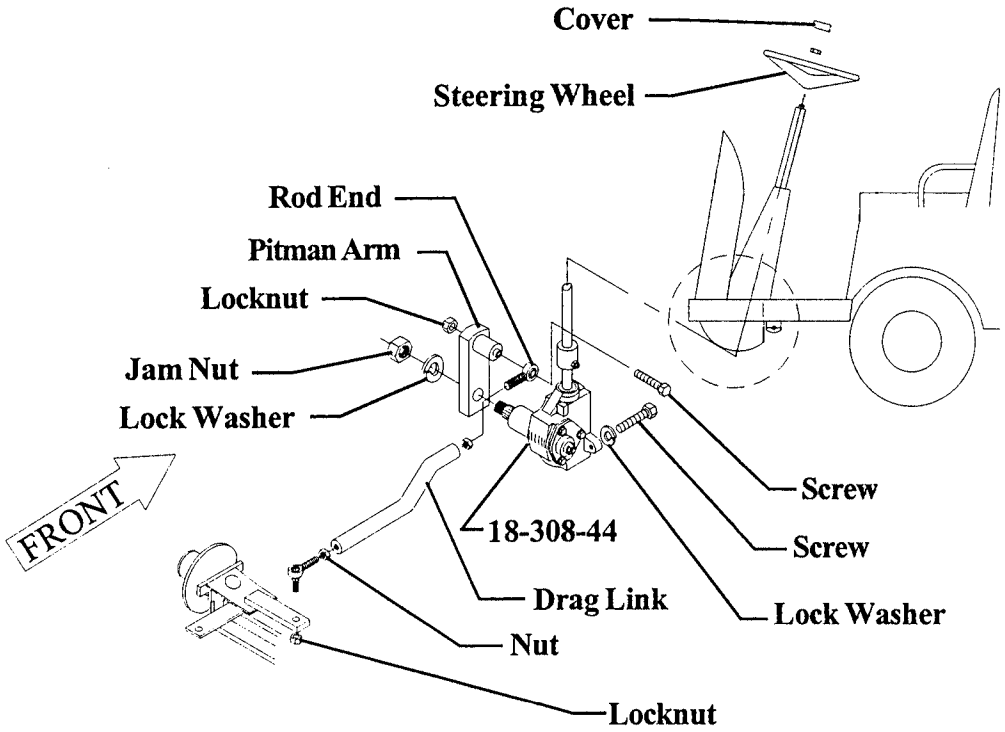

Front Axle Figure 12: Complete Steering Assembly

Installing the Steering Gear

If you are, installing a new steering gear or putting one back into place follow these procedures:

1. With the front of the vehicle raised, and properly supported.
2. Mount the steering gear to the frame, but do not tighten it in place.
3. Connect the input shaft of the steering gear to the steering shaft.
4. Center the steering gear as describe in step # 4 on page 2-25.
5. Connect the pitman arm to the drag link.
6. Staighten the front wheels and connect the pitman arm to the output shaft of the steering gear.

⚠WARNING **Always use new locknuts and bolts. Locknuts and bolts become less effective if used more than once. If the locknuts or bolts holding the brake to the drive come loose, serious injury may occur.**

7. Do not tighten the locknut into place on the output shaft, as you may need to make some adjustments later.
8. Check the front wheels to be sure that they are straight.
9. Tighten the locknut on the steering gear output shaft to secure the pitman arm into place. Always use new locknuts.

If the pitman arm and the drag link to do not line up adjust the drag link so that the drag link matches the length between the centered pivot plate and the pitman arm. *(See "Drag Link Adjustment".)*

10. Remove the jack stands and lower the vehicle.
11. Replace the cover on the right side of the steering column/tower.
12. Connect the main positive and negative to the battery.
13. Remove the blocks from the tires and test-drive the vehicle.

NOTES

Steering Gear Disassembly and Repair

To replace components of the steering gear, use the following procedure and *refer to figure 13, below.*

1. After removing the steering gear, mount it in a vise to hold it securely. Being careful not to damage any mounting surfaces.
2. Rotate the worm shaft until it is centered.
3. Remove the pre-load adjuster nut. In addition, remove the screws holding the side-cover in place.
4. Remove the side cover by turning the adjusting screw clockwise through the cover.
5. Remove the adjusting screw and shim keeping them together.
6. Remove the pitman shaft from the housing.
7. Remove the worm-bearing-adjuster locknut, worm bearing adjuster, bearing cup and lower worm bearing. *Replace as necessary.*
8. Remove the worm shaft and ball nut assembly from housing, being careful not to damage the worm shaft seal.

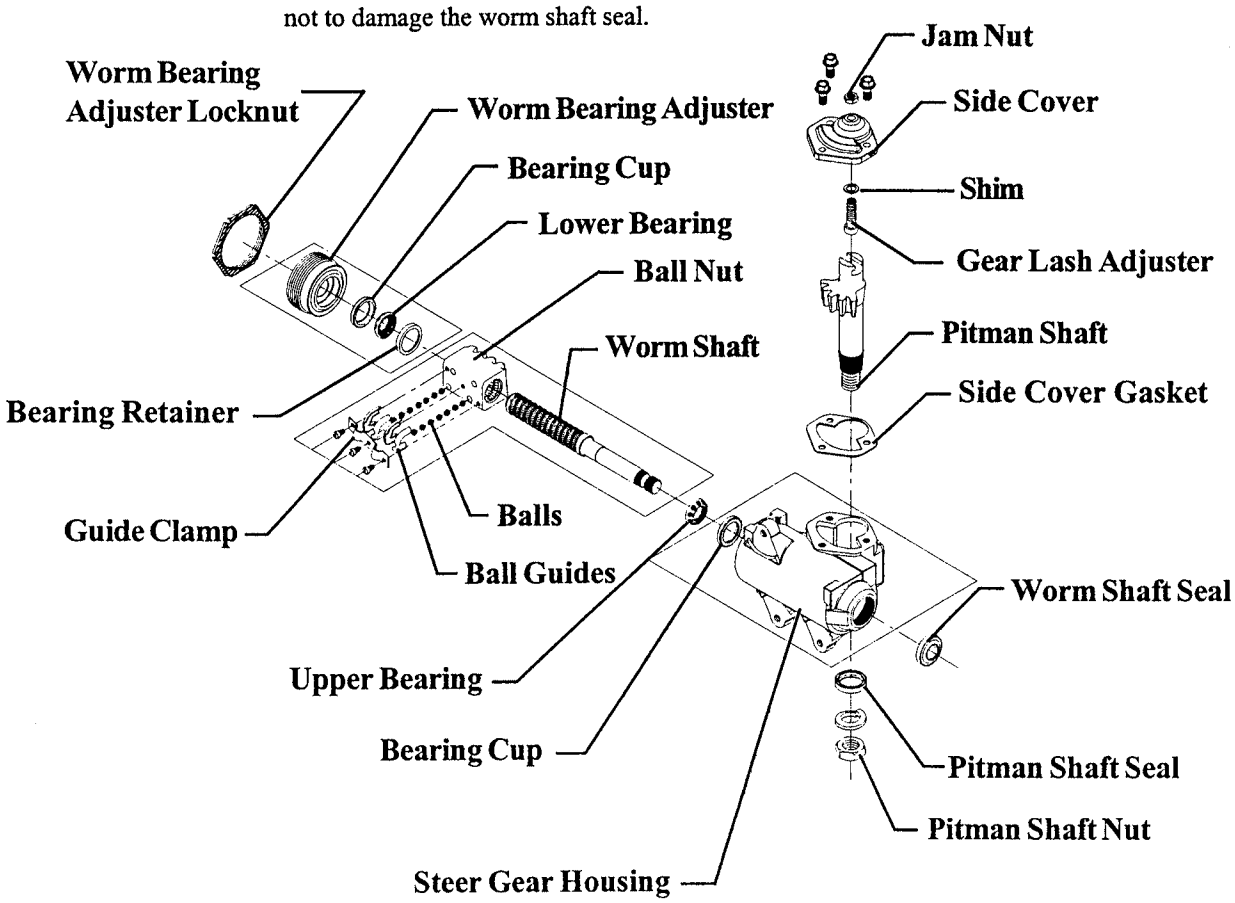

Front Axle Figure 13: Exploded View of Steering Gear

9. Remove the upper worm-bearing cup using a puller and slide hammer.
10. Inspect all bearings, bearing cups, seals, worm grooves, and teeth for scoring, pitting, or wear. Replace any parts having this type of wear.
11. Inspect the worm shaft seal. If damaged, remove with a screwdriver or punch, replace, and tap new seal into place.

    NOTE 10: All seals and bearings should be prelubricated before reassembly.

12. Reinstall the upper bearing cup.
13. Position ball nut on shaft as shown in *figure 14*.
14. Divide balls into two equal groups and install into the ball nut and ball guides, using all-purpose grease to help hold them in place. Rock the worm shaft slightly to aid in installing the balls.

    NOTE 11: Do not rotate the worm shaft while installing balls. Balls may enter the crossover passage between circuits in the ball nut, causing improper operation.

15. Place upper bearing onto worm shaft.
16. Position ball nut in the center of the worm shaft grooves and install shaft, ball nut, and bearing into the housing. Be careful not to damage the worm shaft seal.
17. Install lower bearing retainer, lower worm bearing, bearing cup, worm bearing adjuster, and adjuster locknut. Adjuster should be installed just tight enough to hold the bearing in place.
18. Install pitman shaft adjusting screw and shim to pitman shaft.

    NOTE 12: Screw must be free to turn but have no more than .002" end play. If endplay in screw in slot is too tight or too loose, select a new shim to give proper clearance.

19. Install the pitman shaft and adjusting screw with ball nut and pitman shaft gear centered in housing.

20. Install side cover and gasket onto the adjusting screw. Turn the screw counter-clockwise until it projects through the cover 5/8" to 3/4". Install the side cover bolts, leaving one out for injecting grease.
21. Tighten the pitman shaft adjusting screw so that the teeth of the shaft and the ball nut engage but do not bind.
22. Install the pitman shaft seal over the pitman shaft and into the housing.
23. Fill the steering gear with high-grade chassis lubricant through the side cover bolthole.

    Note 13: Never allow the ball nut to contact the ends of the ball races in the worm. Damage may occur to the ball guides.

24. Turn the steering gear from one lock to the other lock checking for unusual binds
25. Make the final steering gear adjustments as described in the 'Steering Gear Adjustment' procedure.

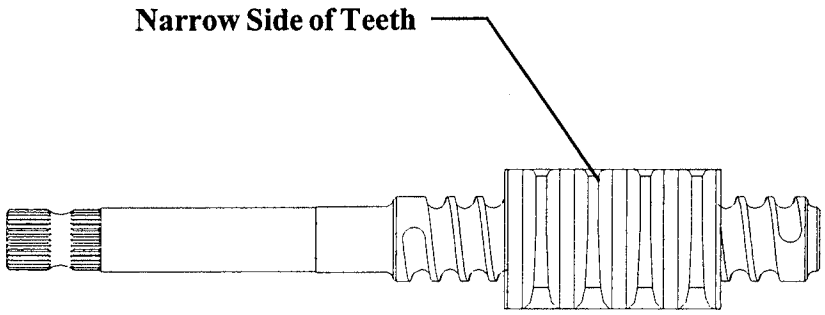

Front Axle Figure14: Worm Shaft

End Play

The endplay of the input shaft may be adjusted so that the input shaft does not move up and down. The only time that you should have the make any adjustments for endplay is after the gear has been repaired.

To adjust the endplay, use the following procedure and *refer to Figure 3-15.*

1. Loosen the adjustment jam nut on the bottom of the steering gear.
2. Tighten the adjusting nut so that there is no endplay and the gear turns freely.

   Tighten the setscrew so that there is a slight drag when the gear passes through its center of travel. (About three turns from lock.)

Front Axle Figure15: Steering Gear

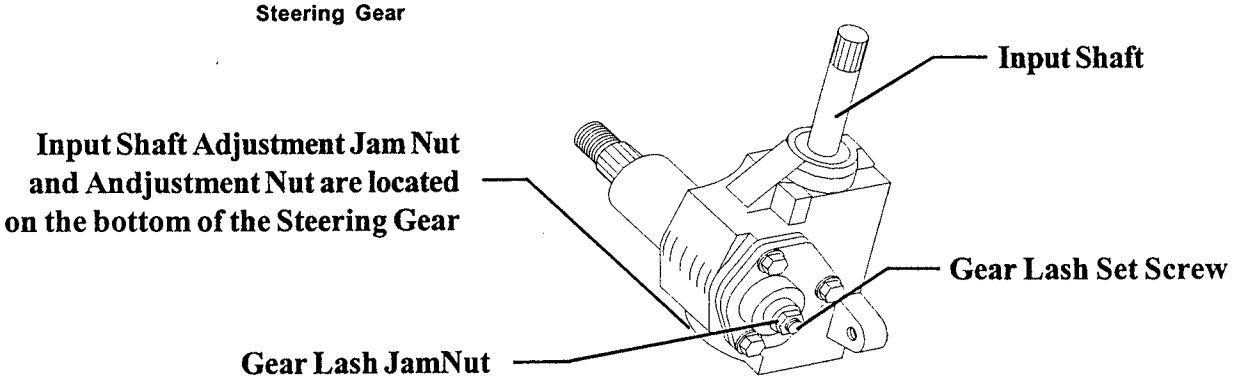

Gear Lash

The gear lash is the amount of play between the input shaft and the output shaft. It is how far the input shaft is turned before the output shaft begins to move. Adjusting for gear lash is a maintenance function and should be included in any maintenance schedule.

To adjust the gear lash, use the following procedure and *refer to figure 3-16.*

1. Disconnect the drag link from the pitman arm.
2. Center the steering gear.
3. Have a second person turn the steering wheel slightly in either direction and watch the output shaft to determine the amount of gear lash present.
4. If the gear lash needs adjustment. Loosen the setscrew jam nut.
5. Tighten the setscrew to decrease the amount of gear lash or loosen it to increase the gear lash. The gear lash should be set so that there is a slight drag when the steering gear passes through the center of its travel. (About three turns from lock).
6. Tighten the jam nut. Do not allow the setscrew to turn while tightening the jam nut.
7. Reinstall the drag link to the pitman arm. Always use a new cotter pins-see WARNING! On previous page.

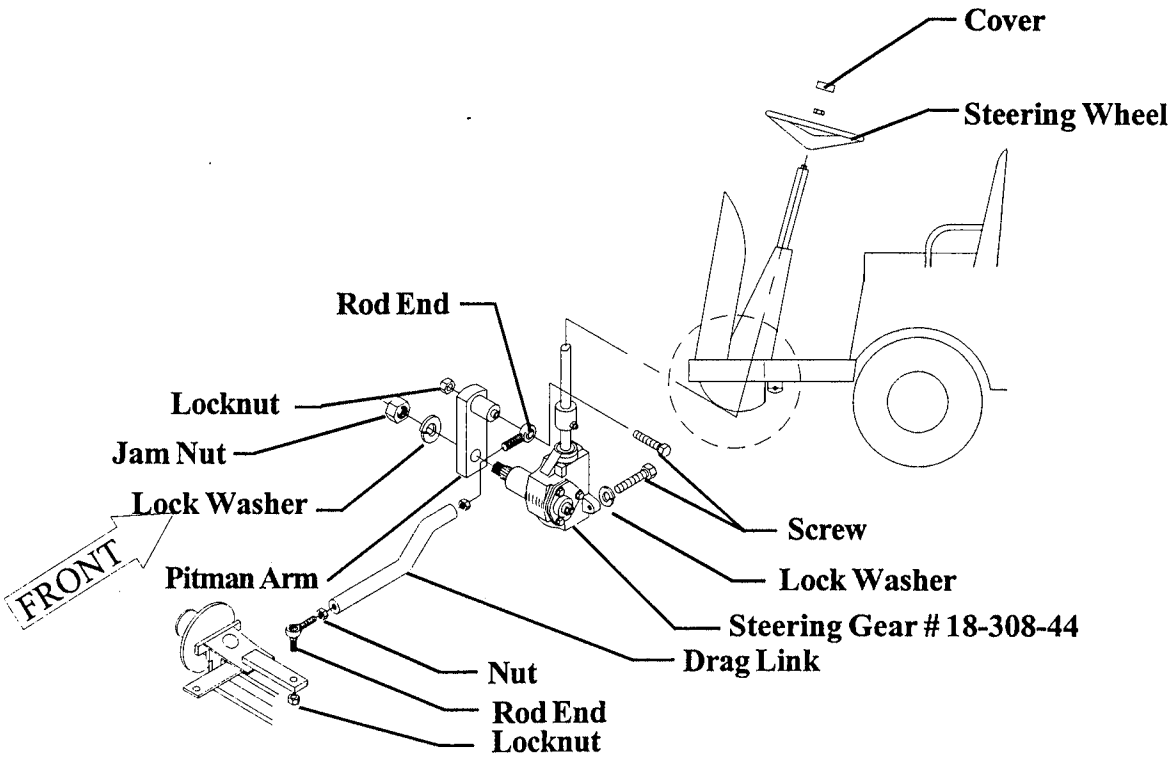

Front Axle Figure16: Ball Joint and Drag Link

Replace Drag Link, Tie Rods and Ball Joints

As part of a service or maintenance, you may need to remove and replace these parts from the steering system. Before doing this however you should check the ball joints for excessive play, which means that the ball joints are worn out and need to be replaced. The following procedure shows you how to remove these parts and replace them as needed. *See Figure 3-17.*

1. Place Blocks under the rear wheel to prevent vehicle movement.
2. Disconnect the main positive and negative at the battery.
3. Raise the front end of the vehicle and support it with jack stands.
4. Remove the locknuts and cotter pins from each of the joints to be replaced.
5. Remove the drag links and tie rod from their connections and install new ball joints where needed.
6. Insert the tie rod ball joints into the yoke and secure them in place with new locknuts and cotter pins.

⚠WARNING **Always use new locknuts and bolts. Locknuts and bolts become less effective if used more than once. If the locknuts or bolts holding the brake to the drive come loose, serious injury may occur.**

7. Insert the opposite end of the tie rod into the pivot plate and secure them in place with the new locknuts and cotter pins.
8. Install the drag link and adjust it and the toe-in as needed by using the appropriate procedure.
9. Check all hardware for tightness.

Drive Service

In this section we will cover how to remove and service the drive assembly for the B1-50.

In order to perform some of the service procedures it is not necessary to remove the entire drive assembly from the vehicle, such as the servicing of the axle. At the beginning of each service procedure you are instructed wether or not to remove the drive assembly to perform the service.

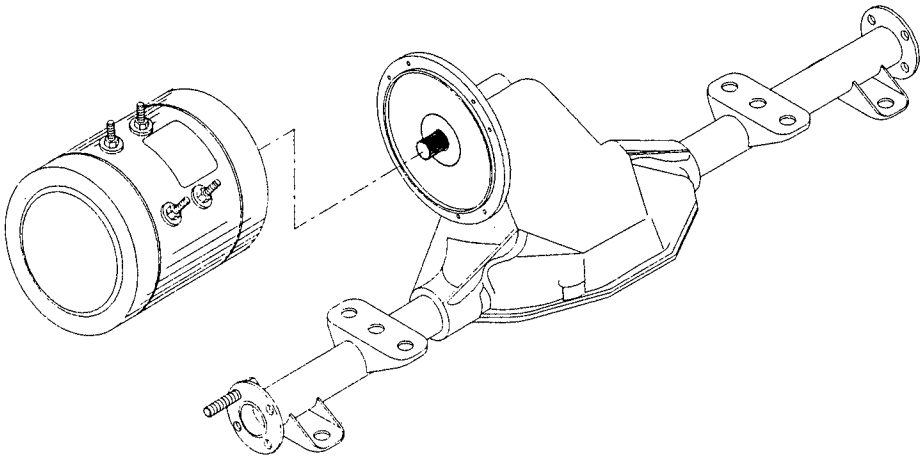

Complete Drive Assembly with Motor: **Shown is the complete drive assembly with motor.**

Removing and Servicing the Rear Axle

This procedure does not require that the rear end or drive assembly be removed in order to complete. However if the rear end assembly is removed from the vehicle, you may skip procedure #1.

1. Raise and support the rear of the vehicle with a hoist or other suitable lifting device.

⚠WARNING

Always use a lifting strap, hoist and jack stands of adequate capacity to lift and support the vehicle. Failure to use lifting and supporting devices of rated load capacity to support the vehicle may result in serious injury and property damage.

2. Remove the tire and wheel assembly.
3. Remove the four bolts attached to the axle retaining plate.
4. Pull axle out of housing.
5. Remove the bearing gasket.

⚠CAUTION

If the bearings are removed from the axle the axle retainer and bearings must be replaced with new ones. Failure to replace these parts could result in the axle coming out of the vehicle while driving.

6. Inspect all bearings for roughness or play. Replace the bearings as needed.
7. Inspect the axle for metal fatigue.
8. Install a new rear axle in reverse order.

Servicing the Differential

At this point we are assuming that the complete drive assembly and differential has been removed from the vehicle, and has been properly placed in a safe work area.

To service the differential use the following procedure

1. Drain the oil from the differential into the appropriate receptacle.
2. Remove the axle shafts from the differential as described on the previous page.
3. Remove the cover plate from the differential and let the remaining oil drain from the housing.

⚠CAUTION **Do not damage the housing sealing surface or deform the cover plate.**

4. Dispose of the old oil properly.
5. Remove the bearing cap screws and bearing caps.

   NOTE 1: BEARING CAPS ARE MARKED FOR IDENTIFICATION, DURING REASSEMBLY. MAKE SURE THEY ARE PUT BACK IN THEIR ORIGINAL POSITION.

6. Remove the differential case assembly from the housing.
7. Remove the differential bearings from each side of the case.
8. Remove the drive gear from the case.
9. Punch or drill a 1/8" hole in the center of each bearing bore plug.
10. Insert a suitably sized sheet metal screw into the hole until the bore plug is forced out of the bearing bore.
11. Remove the snap ring from each bearing bore.
12. Drive the intermediate shaft from the flange side of the housing.

    NOTE 2: USE A BRASS DRIFT PIN TO DRIVE THE SHAFT FROM THE HOUSING.

13. Remove the intermediate bearings from the housing.
14. Remove the O-Rings from the intermediate shaft.
15. Remove the snap rings from the input shaft bore.
16. Pull the input shaft assembly from the housing.
17. Remove the bearings from the input shaft.

    NOTE 3: USE AN ARBOR PRESS TO REMOVE THE BEARINGS FROM THE SHAFTS.

18. Remove the O-Rings from the outer input bearing bore and both intermediate bearing bores.
19. Inspect all parts for signs of wear or damage.

    NOT 4E: Bearing, seal and gear surfaces should be inspected for pitting, wear, overheating or scoring. Replace these parts as needed.

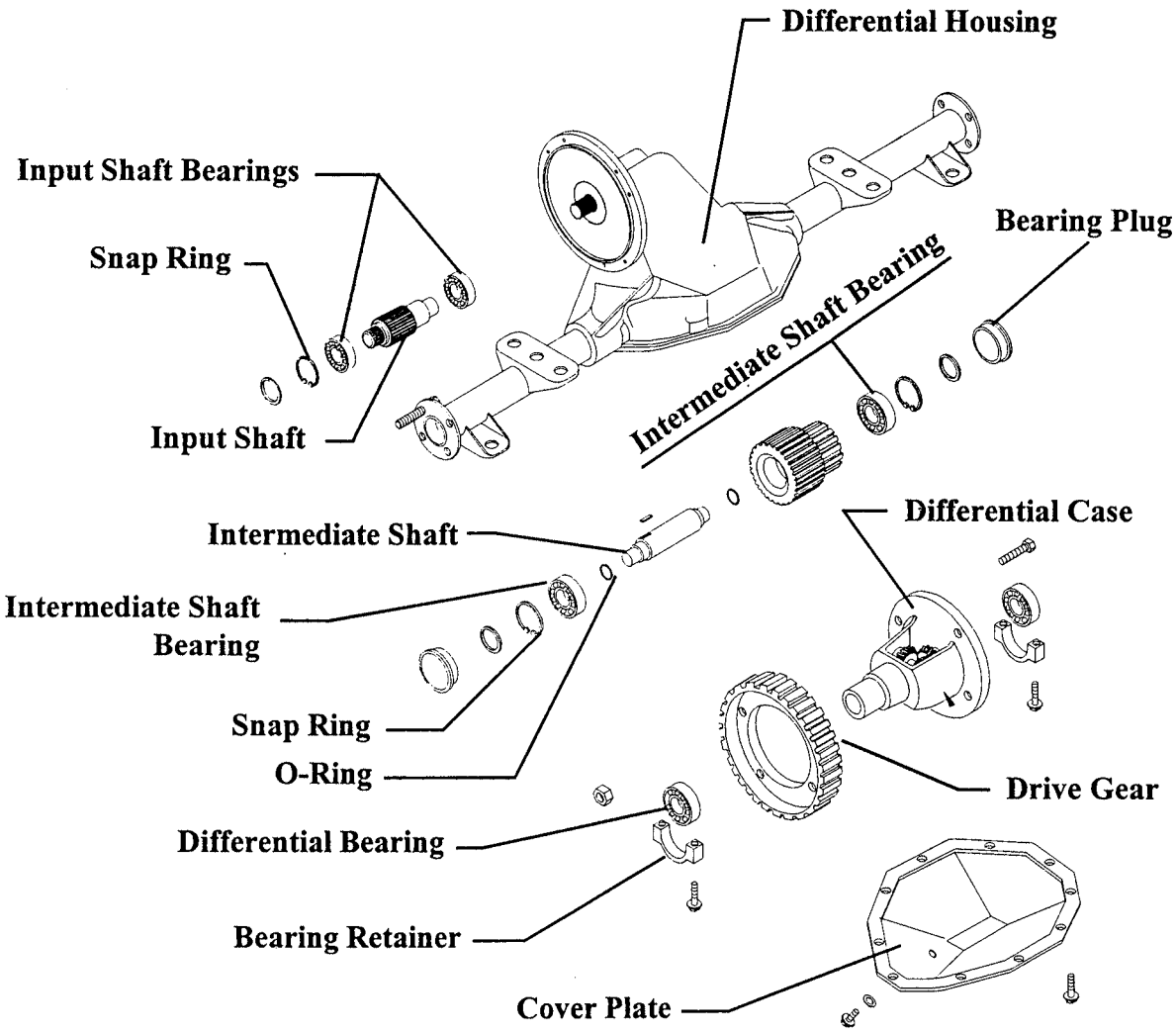

Exploded view of the differential assembly: This view shows the parts contained with in the differential. Part numbers are available in the Illustrated Parts section of this manual.

Changing the Differential Oil

To change the oil in the differential use the procedure below, and refer to the figure on the facing page:

1. Park the vehicle, by placing the forward/reverse switch in the neutral position, and removing the key from the key-switch.
2. Block the tires and set the park brake.
3. Place a drain pan under the center of the drive assembly, that is capable of holding 2 pints of oil.
4. Remove the differential case cover from the differential case and let the oil run into the drain pan.
5. After the oil has emptied, replace the differential case cover, and torque the cover bolts to 16-24 ft-lb.
6. Open the fill plug, located on the right side of the differential case cover and fill the differential with about 1 pint of SAE 30 oil.
7. Replace the fill plug and torque it to 25-40 ft-lb.
8. Test drive the vehicle.

Removing the Complete Drive Assembly

Here you will learn how to remove the entire drive assembly including the motor from the vehicle. (Refer to the figure on the next page.) Be sure to real all safety precautions on page 3-2 of this manual.

NOTE 3: BEFORE BEGINNING THIS PROCEDURE BE SURE THAT YOU HAVE AT LEAST FOUR JACKSTANDS AND TWO LIFTING DEVICES CAPABLE OF SUPPORTING THE VEHICLE.

1. With the vehicle properly parked and the front wheels blocked as stated in the service guidelines on page 3-2. Remove the deck board, and the u-bolts holding the leaf spring to the frame.

⚠WARNING

Always use a lifting strap, hoist and jack stands of adequate capacity to lift and support the vehicle. Failure to use lifting and supporting devices of rated load capacity to support the vehicle may result in serious injury and property damage.

NOTE 4: PROPERLY PARKED MEANS THAT THE MAIN POSITIVE AND NEGATIVE BATTERY LEADS HAVE BEEN DISCONNECT, WITH THE KEY SWITCHED OFF AND REMOVED FROM THE VEHICLE, AND THE FORWARD/ REVERSE SWITCH IS IN NATURAL. THIS ALSO REFERS TO BLOCKING THE WHEELS AND FOLLOWING ALL THE SAFETY GUIDELINES STARTING ON PAGE 3-2.

2. Raise the rear of the vehicle, and support it with jack stands. The drive assembly should then remain on the ground.
3. Label and remove the wires from the motor.
4. Disconnect all brake connections.
5. Remove the front mounting bolts holding the leaf springs to the frame.
6. With the drive now free from the vehicle remove it from under the vehicle.
7. Install in reverse order.

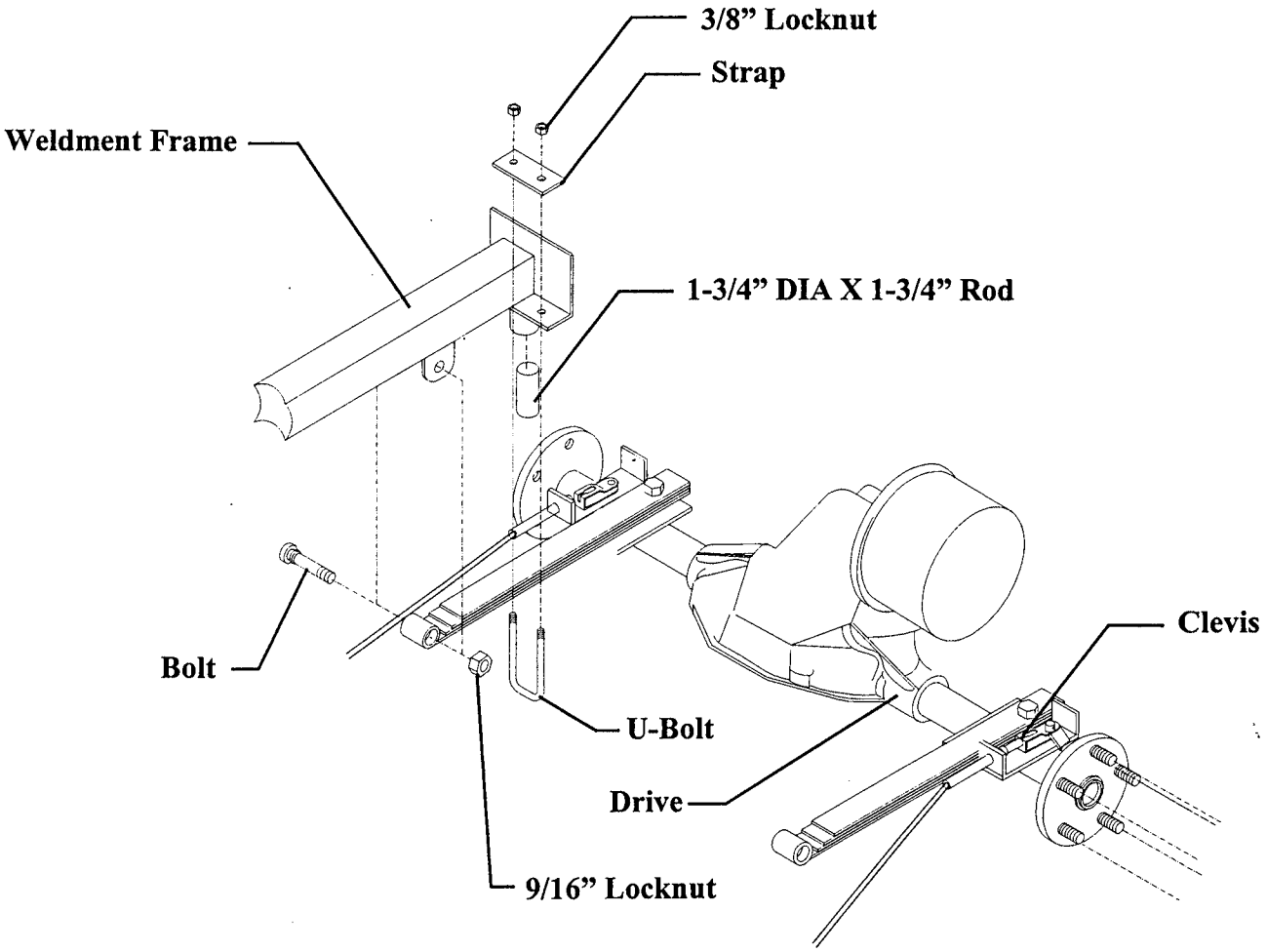

Drive Assembly: The drive assembly is mounted to the frame by the leaf spring mounting bolts, u-bolts, and front mounting bolts. The drive can be removed by removing the rear leaf spring bolts, the u-bolts, and the front mounting bolts, as shown.

Motor

In this section we will cover the removal, service and maintenance of the motor.

Motor Removal

It is not necessary to remove the drive assembly to perform this procedure in most cases. However if your vehicle is equipped with an optional cargo box it may be necessary to at least lower the drive assembly in order to access the motor.

To remove the motor from the differential use the following procedure. Refer to the figures at the bottom of this page and at the right.

1. Support the motor.
2. Label the wires connected to the motor to insure that they are returned to their proper location on the motor during reassembly.
3. Remove the wires from the motor.
4. Remove the motor mounting bolts from the drive.
5. Pull the motor away from the drive and set on a clean level surface such as a work bench.
6. Install the new motor or reassemble in reverse order.

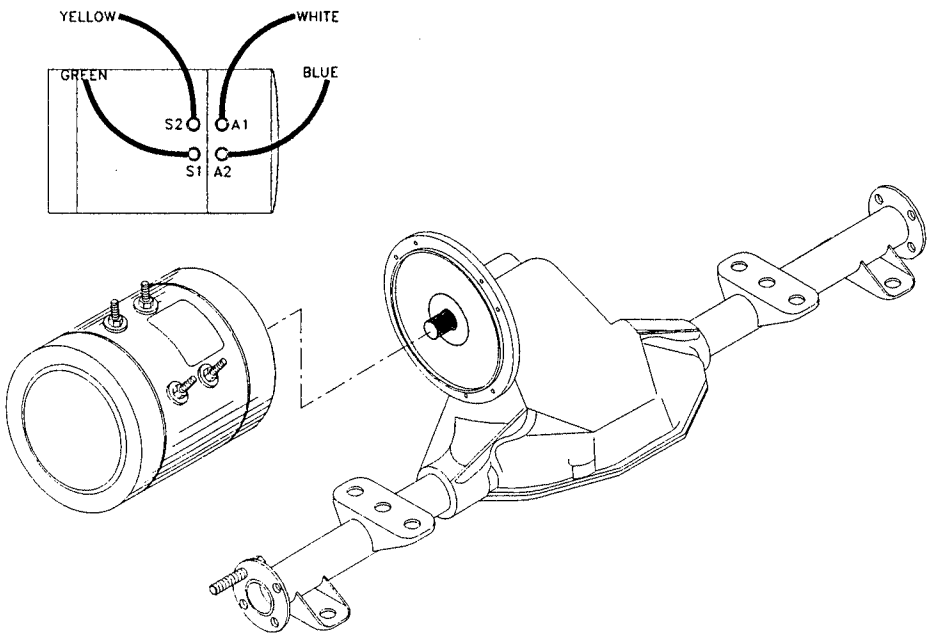

Typical wire connections motor mounting: In this figure we show the wire connections to the motor, their colors, and the mounting of the motor. Be sure to label each of the wires with their correct locations before removing them from the motor. It is also important to support the motor prior to removing any mounting bolts.

Motor Service

Here we will cover how to inspect the armature, and commutator, and how to change the brushes in the motor.

Armature Inspection

In order to inspect the armature and commutator follow the procedure below:

1. Disassemble the motor and, place the motor on a level, clean, flat surface.
2. Check the inside of the motor housing and around the commutator for bits of solder.

   NOTE 5: IF THERE ARE SIGNS OF SOLDER EITHER AROUND THE INSIDE OF THE MOTOR HOUSING OR THE COMMUTATOR. THE MOTOR MUST BE REPLACED. THE PRESENCE OF SOLDER IN EITHER OF THE TWO AREAS MENTIONED IN STEP 2, SHOWS THAT SOLDER HAS BEEN THROWN FROM THE ARMATURE.

3. Inspect the armature for grooves.

   NOTE 6: IF THE ARMATURE IS GROOVED, THE GROOVES MAY BE REMOVED WITH THE USE OF A LATHE

4. Measure the diameter of the commutator. (Refer to the figure on the facing for the proper diameter.)

NOTE: The wear limit of the commutator is 3.109 inches. If the commutator is less then 3.109 inches then it is worn out and the motor must be replaced.

5. Measure the undercut depth on the commutator. (Refer to the figure on the facing for proper depth.)

   NOTE 7: THE UNDERCUT DEPTH IS .025 INCHES. IF THE UNDERCUT DEPTH IS LESS THEN .025 INCHES THE MICA CAN BE RECUT TO THE PROPER DEPTH AS SHOWN IN THE FIGURE ON THE FACING PAGE.

6. Spin the bearings by hand. If any vibration or roughness is felt, they must be replace.

   NOTE 8: IT WILL REQUIRE A PRESS TO REPLACE THE BEARINGS.

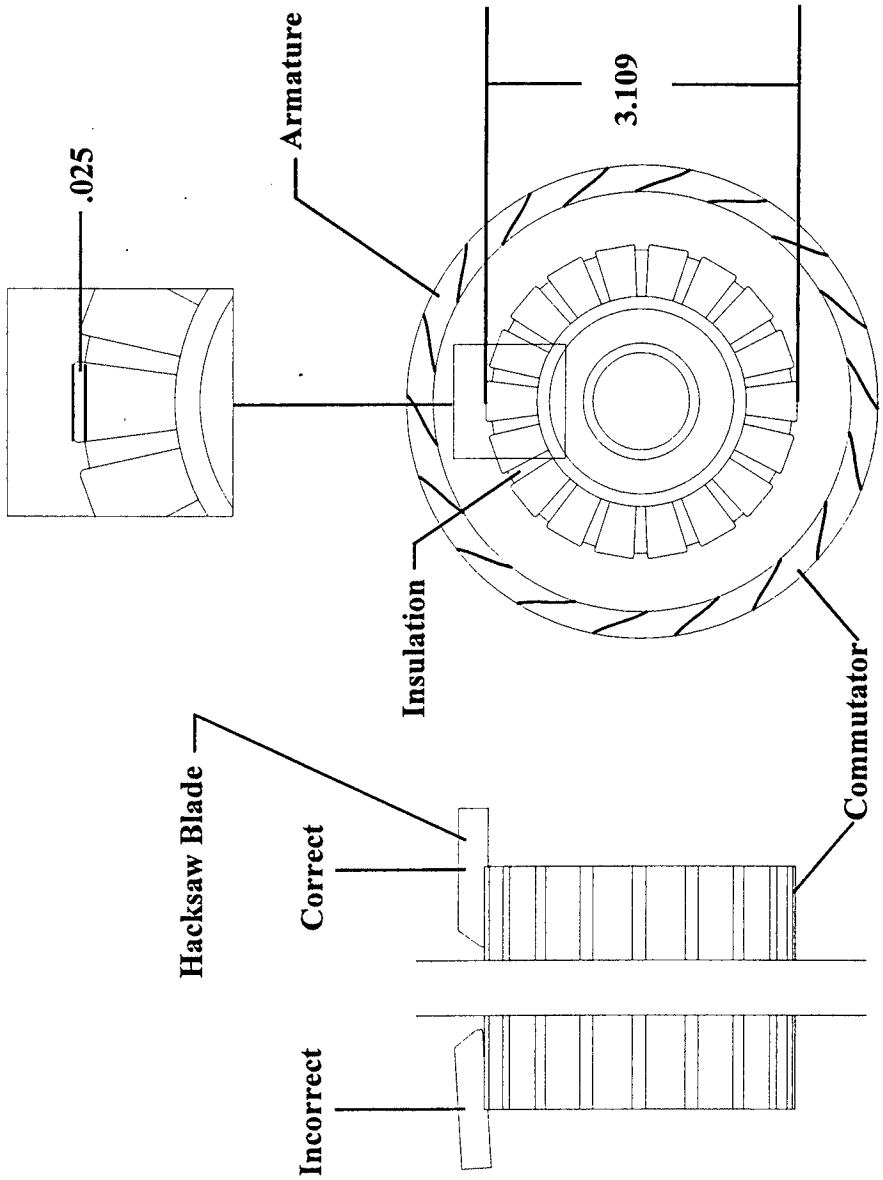

Undercut Figure: The left side shows how to properly cut the mica using a hacksaw blade. The right side of the figure shows the minimum diameter of the commutator and the proper mica depth.

Inspecting and Replacing the Brushes

Inspecting the Brushes

To inspect the brushes in the motor use the following procedure:

1. Remove the motor from the drive assembly.
2. Insert a .035 inch rod or paper clip into the inspection hole directly above the brushes, until it stops.
3. Mark the rod and remove it from the inspection hole.
4. Measure the distance from the end of the rod to the mark.

NOTE 9: IF THE DISTANCE BETWEEN THE END OF THE ROD AND THE MARK IS GREATER THAN 1.5 - INCHES, THE BRUSHES MUST BE REPLACED.

Replacing the Brushes

To replace the brushes use the following procedure:

1. Remove the motor from the drive assembly.
2. Remove the end cap from the motor, revealing the brush holder and brushes.
3. Remove the brush studs from the cover.
4. Remove the brush holder and brushes from the motor.
5. Remove the old brushes front the holder and install the new brushes.
6. Reassemble the motor and install it back onto the drive assembly.

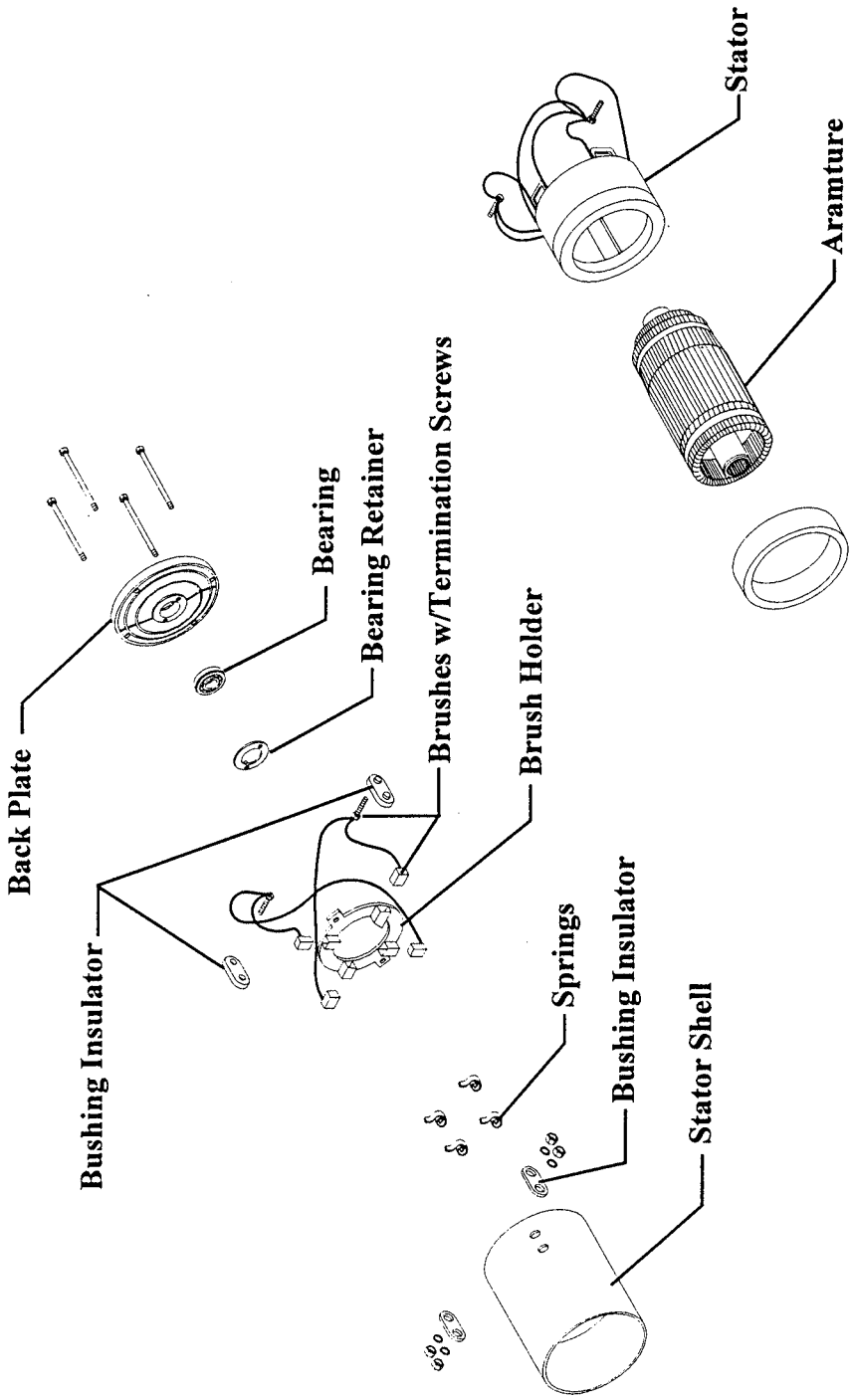

79-049-05 Motor: This is the standard motor installed on the model R3-80. Shown is an exploded view of this motor.

Drive Motor

Motor Disassembly

1. Remove the motor from the chain case.
2. Remove the key(s) from the shaft(s).
3. Remove the front bell housing.
4. Pull the armature out from the motor housing.
5. Remove the rear bell housing.

Replacing the Brushes

1. Remove the Brush covers.
2. Remove the brush wire from the brush holder.
3. Pull the brush straight out from the brush holder.

   NOTE 1: Hold the spring so it does not snap back down into the holdeR.

4. Install in reverse order.

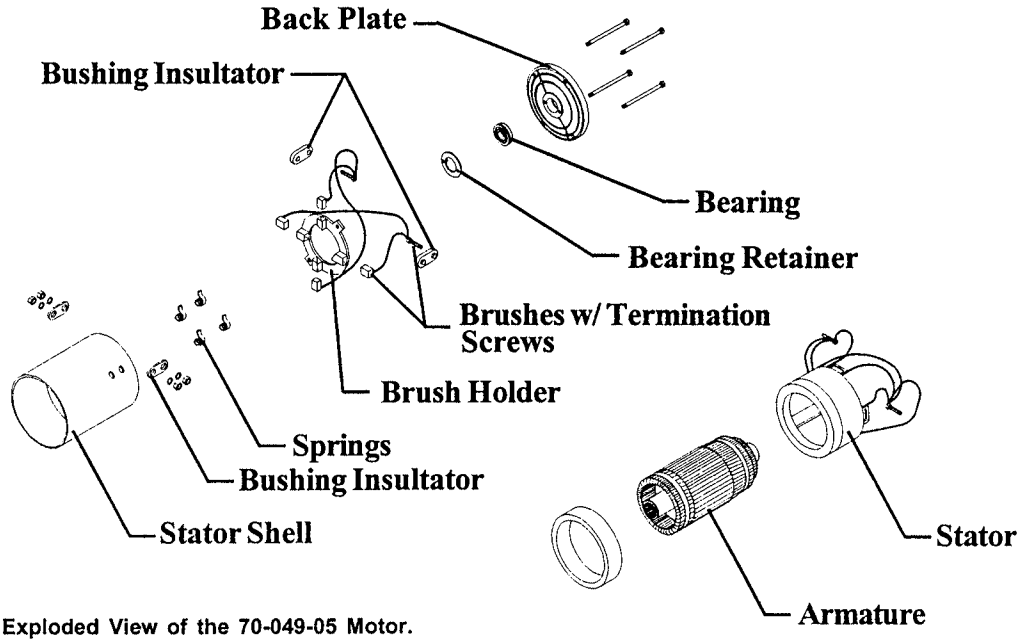

Exploded View of the 70-049-05 Motor.

Inspecting the Armature

1. If any solder has been thrown from the armature the motor must be replaced.

   NOTE 3: Check the inside of the motor housing around the commutator for bits of solder.

2. If the commutator is grooved it must be cut on a lathe.
3. Measure the undercut on the commutator.
   a.) If less than .025" then the mica must be undercut. *See Drive Motor Figure 1 above.*
4. Measure the commutator diameter.
   a.) 70-054-00 MOTOR-If less than 3.109" then the armature is worn out and the motor must be replaced.
5. Spin the bearings by hand.
   a.) If any vibration or roughness is felt, they must be replaced.

   NOTE 4: It will require a press to replace the bearings.

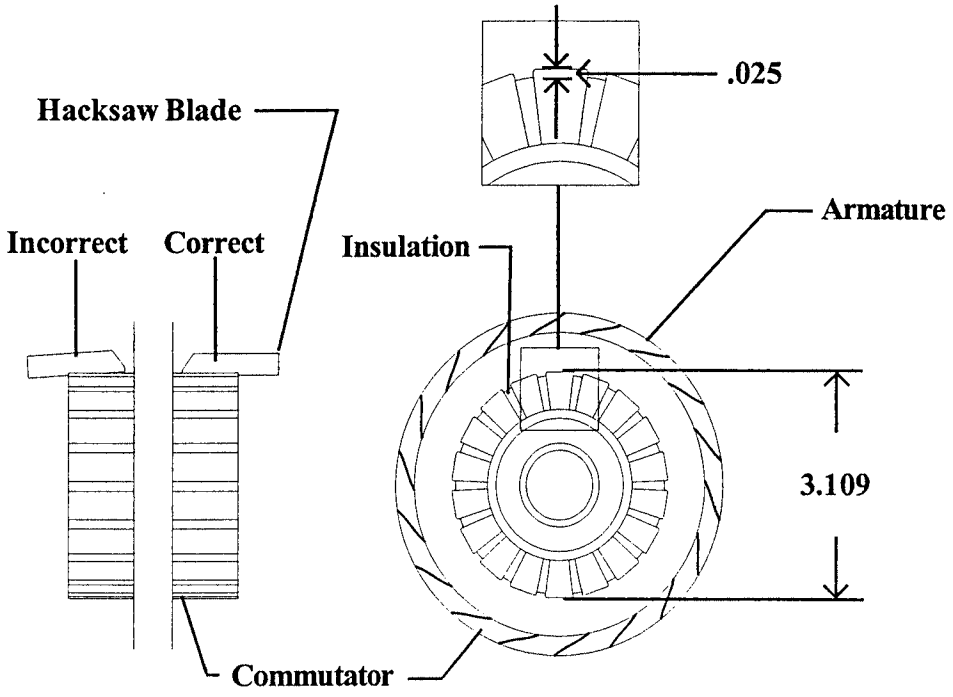

Drive Motor Figure 1: Under Cut

Battery

Cleaning

1. Dry dirt can be readily blown off with low-pressure air or brushed off.
2. Wetness or wet dirt on the covers indicates battery acid. Using a nonmetallic brush with flexible bristles wash it off with a strong solution of baking soda and hot water (1 lb. of soda to gallon of water). Continue until all fizzling stops, which indicates that the acid has been neutralized. Then rinse thoroughly with clear water. DO NOT get any of the solution into the battery cells.

⚠WARNING **Battery electrolyte is poisonous and dangerous. It contains sulfuric acid. Avoid contact with skin eyes or clothing. Wear rubber gloves and safety glasses while servicing batteries. DO NOT INGEST!**

⚠WARNING **Batteries produce an explosive gas when charging. DO NOT SMOKE, produce an open flame or spark while checking or servicing a battery.**

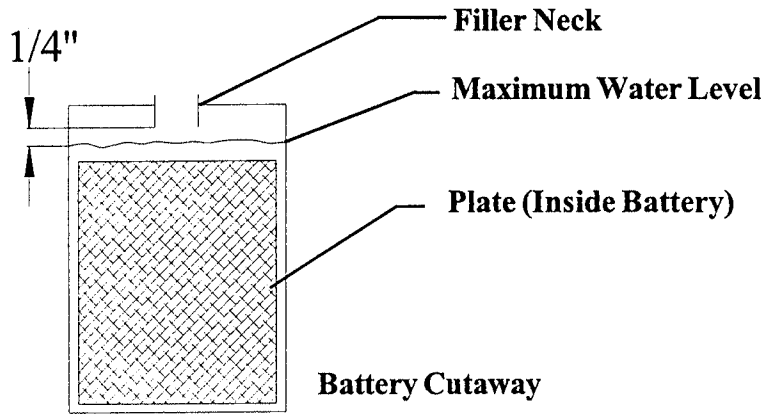

Battery Fill Level: This figure show the proper fill level for the batteries.

Servicing

1. Check the electrolyte level in all batteries. If low fill with distilled water up to the correct level *(Refer to the figure on the previous page).*

⚠CAUTION **Do not overfill the battery. An overfilled battery may leak acid.**

2. Clean the battery *(See Battery Cleaning on the previous page.)*
3. Clean the cell posts connectors and battery box with water.

Charging

To charge the batteries do the following:

1. Check the electrolyte level. If low, fill with distilled water up to the correct level (see figure on previous page).

⚠WARNING **Explosive mixtures of Hydrogen gas are present within battery cells at all times. Do not work with or charge battery in an area where open flames (including gas furnace or water heater pilots), sparks, cigarettes, or any other sources of combustion are present. Always provide ample ventilation in rooms where batteries are being charged.**

2. Park the vehicle in an approved area for charging and plug the charger in.
3. Allow the charger to cycle completely before unplugging.

Battery Storage

The following pointers will help extend the life of the battery when storing your vehicle for the winter season:

- Clean and check the electrolyte level and charge level of the battery. Do not store a battery low in electrolyte or in a low state of charge.
- Recharge a battery not in use every 1 to 2 months.
- If possible, store the vehicle in a cool dry place.

If the batteries are removed from the vehicle, do not place them directly on the ground, concrete or solid metal surface. It is recommended to store them on a wooden pallet or equivalent.

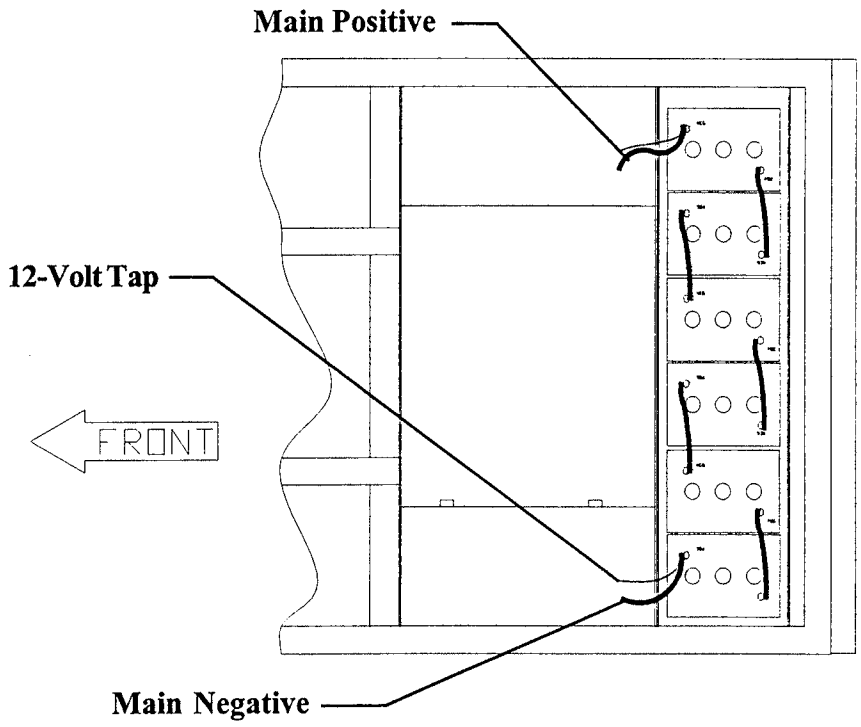

Battery Configuration: Shown are the batteries and how they are connected together for a 36-Volt electrical system.

TAYLOR -DUNN

Electrical and Charger Troubleshooting

TAYLOR-DUNN®

The Best Way To Go About Your Business

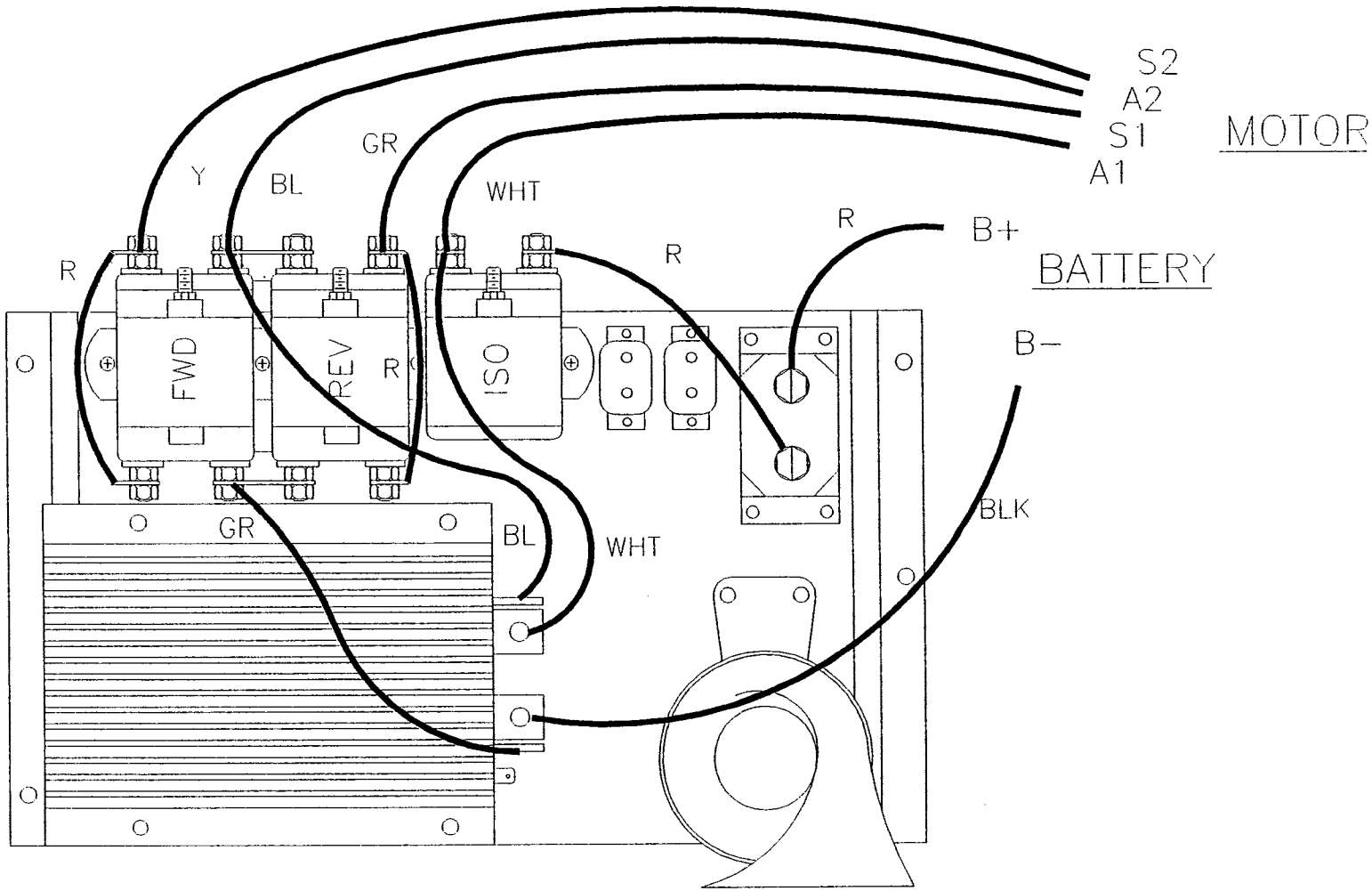

Typical Control Panel

PMC TROUBLESHOOTING

Test Equipment Required:

- Digital multi-meter (DMM) with diode test function, FLUKE 79 model shown.
- Shunt or clamp-on DC Ammeter to measure up to 400 Amps.
- Test light with a rated voltage equal to or exceeds maximum battery voltage or Taylor-Dunn test light part number #62-027-00 for systems up to 48 volts.
- Test harness, Taylor-Dunn #62-027-31.

IMPORTANT NOTES and INSTRUCTIONS

- This troubleshooting guide assumes that you are familiar with the use of a digital multi-meter including, voltage tests, continuity tests and diode testing. If you do not understand any part of these tests, you should refer testing to a qualified technician.
- Make sure the batteries are in good condition and fully charged before performing any tests.
- If the truck exhibits intermittent problems, it must be in the failed mode for troubleshooting. If it is running normally when the testing is done, you will not find the problem.
- All voltage tests are done referenced to battery negative unless otherwise specified.
- Battery volts = full voltage available at batteries at the time of test.
- All tests are done with key-switch on and any safety switches (if equipped) closed.
- This test procedure must be performed in the order it was written. If you start in the middle or skip sections when not instructed to do so, you may not get the proper results.
- Perform each test in the order it is written. If the test result is good, then proceed to the next test or go to the next section if instructed to do so.

DURING ALL TESTS

⚠WARNING **Both drive wheels are to be supported off the ground by jack stands with the front wheels blocked.**

- All test in this manual refer to the full battery voltage as being equal to the voltage at the batteries, at the time of test. (Batteries should be fully charged and tested.)
- After any repairs are made completely test vehicle before lowering the drive wheels to the ground.
- Disconnect both of the battery leads during any maintenance, or before disconnecting any electrical component or wire.

If the truck runs normally in only one direction and does not run in the opposite direction then go to the **SOLENOIDS** section.

If the truck runs slow and/or lacks power go to the **SPECIAL TROUBLESHOOTING** section.

CONTROL WIRES AT PMC

With the F&R switch in gear (forward or reverse), depress the Accelerator pedal to engage the first micro switch *only* (creep speed) and perform the following tests.

TEST #1:

Test voltage at pin 'KSI' on the PMC control. ***Refer to Control Wires Figure 1.***

Results:

The Voltage reading should equal the battery voltage.

Action:

If the result equals the battery voltage continue to TEST#2. If it does not equal the battery voltage continue on to the **KSI** section.

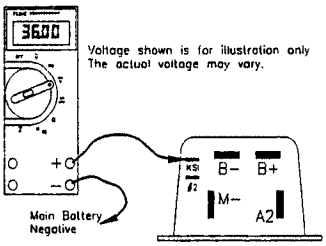

Control Wires Figure 1

TEST #2:

Test voltage at pin #2 at the PMC. ***Refer to Control Wires Figure 2.***

Results:

The Voltage reading should be between 6 and 6.5 Volts.

Action:

If the result is between 6 and 6.5 Volts continue to the TEST#3. If the result is not between 6 and 6.5Volts, go to the **ACCELERATOR MODULE** section.

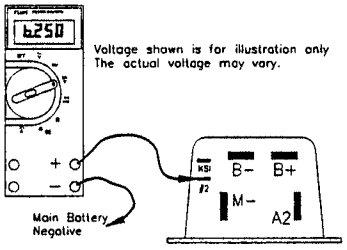

Control Wires Figure 2

With the F&R switch still in gear, depress the accelerator pedal fully.

TEST #3:

Test voltage at pin #2 on the PMC control. ***Refer to Figure.***

Result:

The Voltage reading should be between 11 and 11.5Volts.

Action:

If the result is between 11 and 11.5 Volts continue to the test #1 in the **POWER WIRING** section. If the result is not between 11 and 11.5Volts go to the **ACCELERATOR MODULE** section.

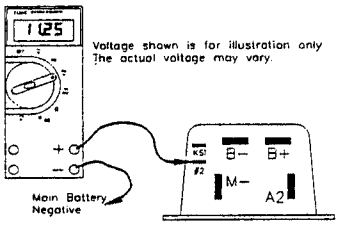

Test of Control Wires: Measuring voltage between pin #2 of the PMC and Battery Negative.

POWER WIRING

NOTE 1: All tests in this section are with the resistor at the ISO solenoid disconnected. Reconnect the resistor when exiting this section.

Depress the Accelerator pedal to engage the first micro switch *only* (creep speed) and perform the following tests.

TEST #1:

Test voltage from the main battery negative post to the 'B+' terminal on the PMC. ***Refer to Test of Power Wiring figure at the right.***

Result:

The Voltage reading should equal the battery voltage.

Action:

If the result equals the battery voltage continue to TEST#2. If it does not equal the battery voltage continue on to the **SOLENOIDS** section.

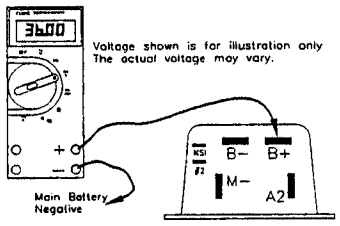

Test of Power Wiring: Measuring the voltage between the B+ of the PMC and Battery Negative.

TEST #2:

Test voltage from the 'B+' terminal on the PMC control to the 'B-' terminal on the PMC control.***Refer to the top right figure.***

Result:

The Voltage reading should equal the battery voltage.

Action:

If the result is equal to the battery voltage then continue to TEST #3. If the result is not equal to the battery voltage then the problem is in the wiring or connections from the main battery negative post to the 'B-' terminal on the PMC control. **Stop here and repair/ replace the wiring and/or connections.**

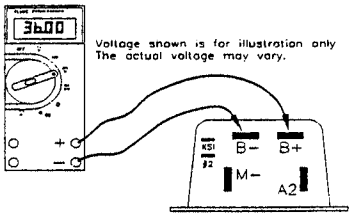

Test of Power Wiring: Measuring the voltage between the B+ and B- terminals of the PMC.The correct meter reading is equal to the voltage at the batteries at time of test.

TEST #3:

Remove the resistor from the ISO solenoid. Measure the resistor using the resistance or ohm setting on the meter and check the ISO resistor. ***Refer to figure, below.***

Result:

The reading should be 250, +/- 10-percent

Action:

If the result is 250 ohms, reconnect the resistor and continue to TEST #4. If the result is not 250 ohms then replace the resistor.

NOTE 2: A defective resistor could cause intermittent operation of control but would not stop it from working.

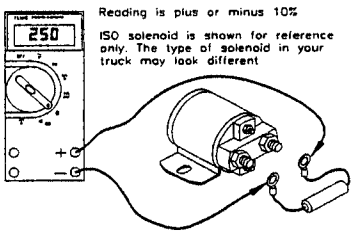

Measuring the Resistance of ISO Solenoid Resistor: The resistor is test with the meter set to ohms. The correct reading is 250 ohms +/- 10- percent.

Depress the accelerator pedal fully and perform the following tests.

TEST 4:

Test voltage from the 'M-' terminal on the PMC control to the 'B+' terminal on the PMC control. ***Refer to top right figure.***

Result:

The Voltage reading should equal the battery voltage +/- 1Volt.

Action:

If it is within 1 volt of the battery voltage then continue to TEST #5. If it is not within 1 volt of the battery voltage then the PMC control is bad and must be replaced. **Stop here and replace the PMC Control.**

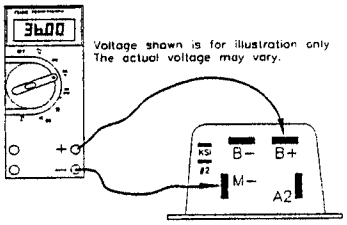

Measuring Voltage Across B+ and M- of PMC: The correct meter reading should equal the battery voltage at time of test.

TEST #5:

Connect the test light across the motor 'S1' and 'S2' terminals. ***Refer to Testing Motor Figure below right.***

Result:

The light should be OFF.

Action:

If the light is OFF then continue to TEST #6. If the light is ON then the field is open and the motor must be replaced. **Stop here and replace the motor.**

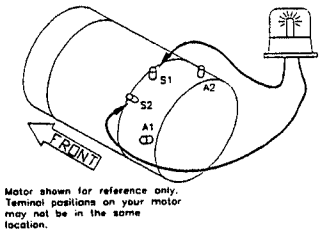

Testing Motor: The light is connected across the S1 and S2 terminals of the motor. If the light comes on the motor is to be replaced. If it does not light continue with testing.

TEST #6:

Connect the test light across the motor 'A1' and 'A2' terminals.

Result:

The light should be OFF.

Action:

If the light is OFF, go to the **SOLENOIDS** section. If the light is ON then the armature is open and the motor must be replaced. **Stop here and replace the motor.**

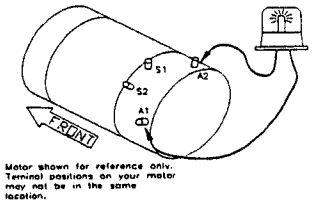

Testing Terminal A1 and A2 of Motor: The light is connected across terminals A1 and A2 of the motor. If the light is on the motor should be replaced. If it does not come on go to the SOLENIODS section.

If no fault was found up to this point then go to the SOLENOIDS section

ACCELERATOR MODULE (magnetic or solid state only)

These tests are valid for the Magnetic and Solid State modules only. These tests will not work with the potentiometer (POT) modules. The Magnetic and Solid State modules can be identified by how many positions are available in the harness connector. The Magnetic and Solid State modules use a 9-position connector, the POT module uses a 7 position connector. The POT module is not compatible with Taylor-Dunn PMC controllers. If your truck is equipped with a POT module, it must be upgraded to a new module to be used with a PMC control. Contact your Taylor-Dunn distributor for more information.

NOTE 3:These tests are done at the accelerator module using the 62-027-31 test harness (see figure below). Connect the short end of the harness to the accelerator module and the trucks control harness. Testing will be done at the connector on the long end of the harness. The truck should not run with the harness connected. If your truck runs with the harness connected, there is a problem somewhere other than the accelerator module. ***Refer to the Harness Figure at the bottom of this page.***

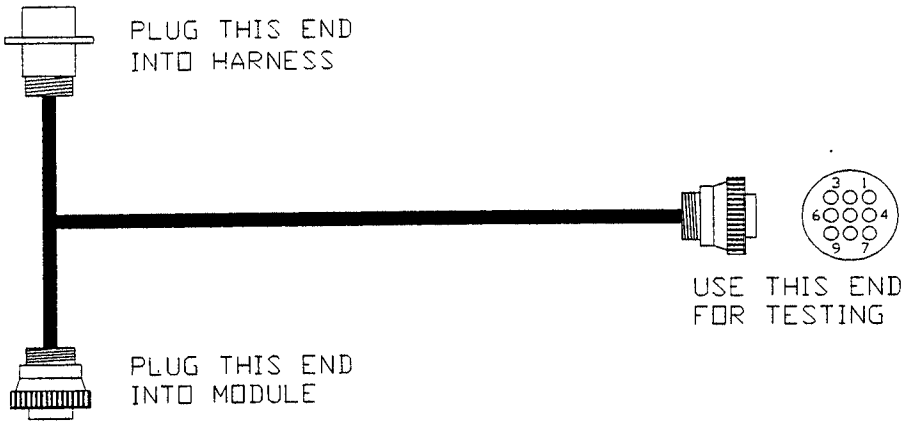

Test Harness: This shows the test harness that is used for conducting the following tests.

From this point on the end view of the test harness will be shown to clarify pin positions used for testing. There are no further reproductions of this figure in this section of the manual.

Depress the Accelerator pedal to engage the first micro switch *only* (creep speed) and perform the following tests.

⚠WARNING **The rear drive wheels should be raised off the ground and the vehicle supported by jack stands.**

TEST #1:

Test voltage at PIN #4 in the test harness. ***Refer to Testing the Accelerator, Figure 1***

Result:

The Voltage reading should equal the battery voltage.

Action:

If it is not equal to the battery voltage then go to the **KSI** section, otherwise continue with the next test.

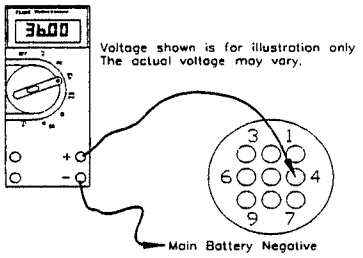

Tesing the Accelerator 1

TEST #2:

Test voltage from PIN #4(+) to PIN #9(-). ***Refer to Testing the Accelerator, Figure 2.***

Result:

The Voltage reading should equal the battery voltage.

Action:

If it is not equal to the battery voltage then check the wire in pin #9 to the circuit breaker on the control panel and the circuit breaker. **Stop here and repair the problem,** otherwise continue with the next test.

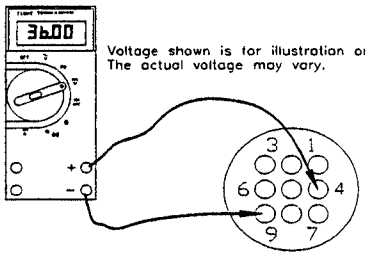

Testing the Accellerator 2

TEST #3:

Test voltage at PIN #2. ***Refer to Test Accellerator, Figure 3.***

Result:

The meter should read from 6Volts to 6.5Volts.

Action:

If not 6 to 6.5 volts then the accelerator module is bad. **Stop here and repair the problem,** otherwise continue with the next test.

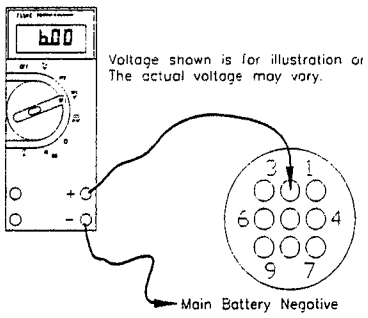

Test Accelerator 3

TEST #4:

Test voltage at PIN #5. ***Refer to Test Accellerator, Figure 4***

Result:

The voltage reading should equal the battery voltage.

Action:

If not equal to the battery voltage then the accelerator module is bad. **Stop here and repair the problem,** otherwise continue with the next test.

NOTE 4: A broken accelerator return spring will cause no output at PIN #5.

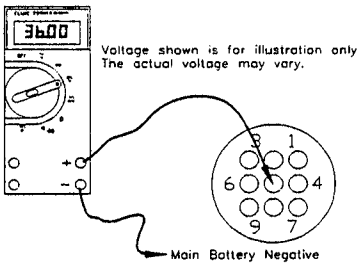

Test the Accellerator 4

Now depress the Accelerator pedal fully and perform the following tests.

TEST #5:

With the Accelerator pedal fully depressed, test voltage at PIN #2.
See Test the Accelerator, Figure 5

Result:

Voltage reading should be between 11 and 11.5Volts.

Action:

If it is not 11 to 11.5 volts then the accelerator module is bad. **Stop here and replace the module,** otherwise continue on to test #6.

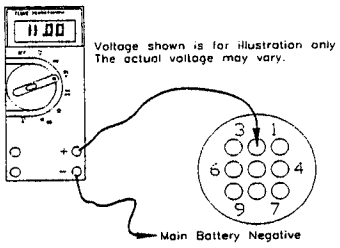

Test the Accellerator 5

TEST #6:

Test the continuity of pin #2 in the wire harness. By placing the meter leads on pin #2 of each end of the wire harness. ***Refer to Accelerator Figure #6***

Result:

Should hear audible alarm, showing that there is continuity in wire.

Action:

If there is no continuity. **Stop here and replace the wire harness,** otherwise continue on to test #7.

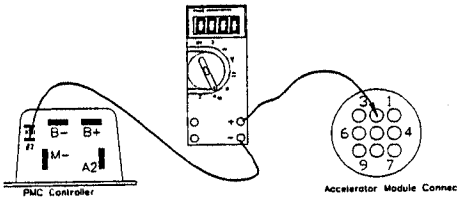

Test the Accelorator 6

NOTE 5: Some models route wire #2 through a seat switch. If equipped with a seat switch, check the continuity of the seat switch

with an Ohmmeter.

TEST #7:

Test voltage from the 'M-' terminal on the PMC control to the 'B+' terminal on the PMC control. ***Refer toTest the Accellerator, Figure 7.***

Result:

The Voltage reading should equal the battery voltage.

Action:

If it is not within 1 volt of the battery voltage then the PMC control is bad and must be replaced. **Stop here and replace the PMC.**

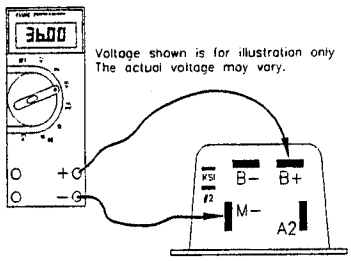

Test the Accelerator 7

If no faults were found, continue with the next section, KSI.

KSI

TEST #1

Check the safety interlock switches (if equipped) for continuity. ***Refer to Figures in Appendix.***

Result:

Should hear audible alarm, showing that there is continuity in the switch.

Action:

If there is no continuity. **Stop here and replace the safety interlock switch,** otherwise continue on to test #2.

Refer to Figures in the Appendix at the end of this manual.

NOTE 6: Due the fact that there are 4 possible standard safety interlock switches and many optional switches. We have placed figures of the standard switches in the appendix. please refer to appendix for meter lead placement for test #1.

TEST #2

Test the key-switch for continuity. ***Refer to KSI Figure #1***

Result:

Should hear audible alarm, showing that there is continuity in the key-switch.

Action:

If there is no continuity. **Stop here and replace the key-switch,** otherwise continue on to test #3.

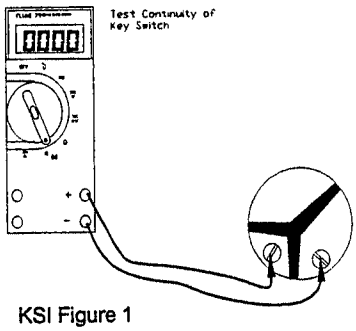

KSI Figure 1

TEST #3

Test the F&R switch for continuity in forward and reverse. ***Refer to KSI Figure 2***

Result:

Should hear audible alarm, showing that there is continuity in the switch.

Action:

If there is no continuity. **Stop here and replace the F&R switch,** otherwise continue on to test #4.

TEST #4:

Test the control wires for continuity and visually inspect them for opens.

Result:

Should hear audible alarm, showing that there is continuity in wire. There should not be any cracks in the wire insulation or any of the wire strands broken.

Action:

If there are opens, cracks in the insulation or broken wire strands. **Stop and replace the faulty control wires,** otherwise continue on to the next section Solenoids.

NOTE 7: If you reached this point without a solution, then you may have an unanticipated problem or have made an error during testing

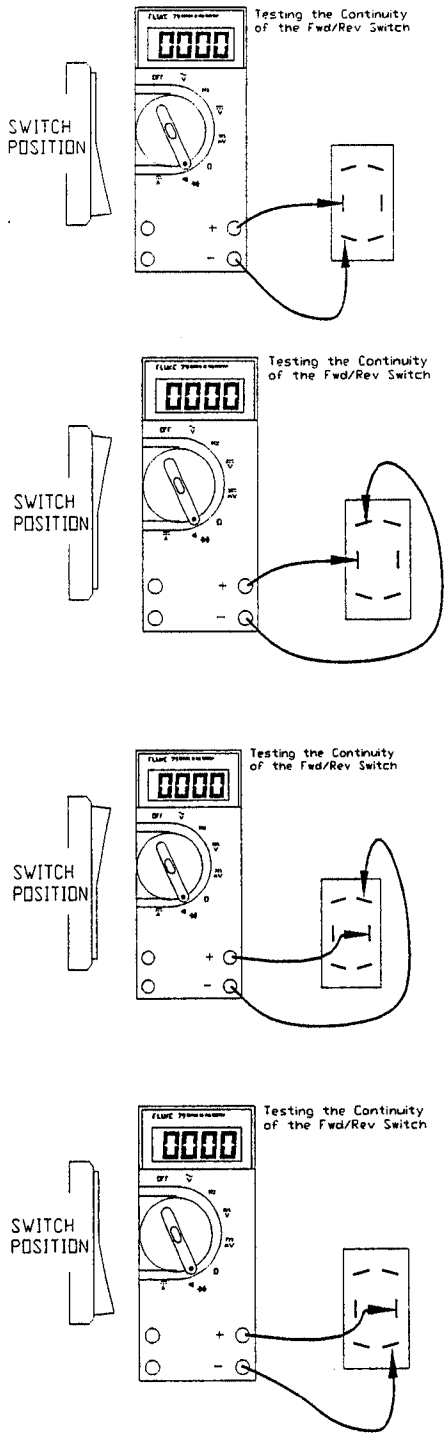

KSI Figure 2

SOLENOIDS

TEST #1:

Remove the resistor from the ISO solenoid. Measure the resistor using the resistance or ohm setting on the medter and check the ISO resistor. ***Refer to Solenoids Figure 1.***

Result:

The reading should be 250 +/-10% (225 to 275 ohms).

Action:

If the result is 250 ohms, reconnect the resistor and continue to TEST #2. If the result is not 250 ohms then replace the resistor.

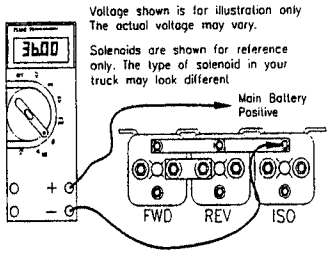

Solenoids Figure 1

NOTE 8: A defective resistor could cause intermittent operation of control but would not stop it from working.

Reconnect the main positive and negative battery cables and continue with the test procedures.

If your truck runs in forward only then go to the **FORWARD ONLY** section.

If your truck runs in reverse only then go to the **REVERSE ONLY** section.

If your truck does not run in either direction, continue with testing on the next page.

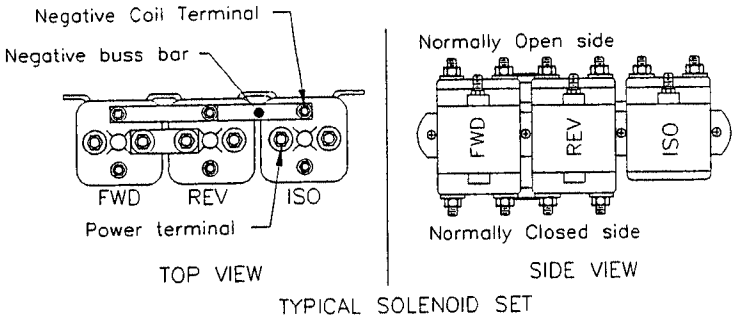

Typical Solenoid Set

Place the F&R switch in neutral and perform the following tests.

TEST #1:

Depress the accelerator pedal and listen for the ISO solenoid to click.

Result:

Should hear the ISO solenoid click.

Action:

If the ISO solenoid clicks then go to the **ISO** section.

If the ISO solenoid does not click then continue with the next test.

Test #2:

Test voltage from the battery positive terminal to the negative coil terminal on the ISO solenoid. ***Refer to Solenoids Figure 2.***

Result:

The voltage reading should equal the battery voltage.

Action:

If it is not equal to the battery voltage then check the negative control wiring and the negative circuit breaker. **Stop here and repair the problem,** otherwise continue with the next test.Now depress the Accelerator pedal fully and perform the following tests.

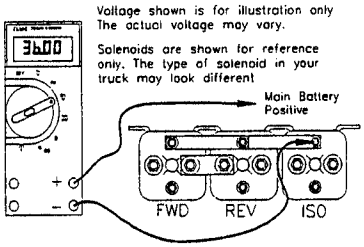

Solenoids Figure 2

TEST #3:

Test voltage across the ISO coil terminals. ***Refer to Solenoids Figure 3.***

Result:

The voltage reading shold equal the battery voltage.

Action:

If not equal to the battery voltage then check the wiring, the MS1 switch output (pin 5 of the accelerator module), all safety interlock switches and the key-switch. **Stop here and repair the problem,** otherwise continue to the next test. *(Cont'd on Next Page.)*If the voltage across the ISO coil terminals is equal to the battery voltage then the ISO coil is bad and the solenoid must be replaced. **Stop here and repair the problem,** otherwise continue on to the next section ISO.

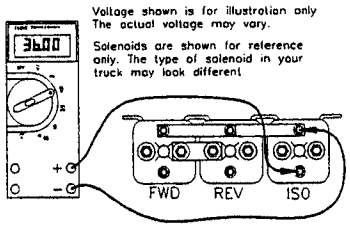

Solenoids Figure 3

ISO

TEST#1

Connect the test light across the ISO power terminals and depress the accelerator pedal fully. ***ISO Solenoids Figure 1.***

Result:

The light should not come on.

Action:

If the light comes on when the pedal is depressed then the ISO solenoid contacts are open and the solenoid must be replaced. **Stop here and replace the ISO solenoid.**

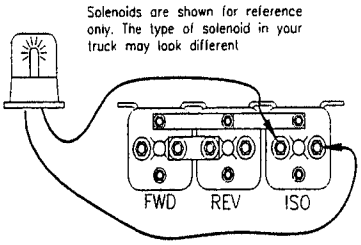

ISO Solenoids Figure 1

If the light does not come on, then check the power wiring to the batteries and the power wiring to the PMC for opens. **Stop here and repair the problem.**

NOTE 9: If you reached this point without a solution, then you may have an unanticipated problem or have made an error during testing.

FORWARD ONLY

TEST #1:

Place the F&R switch in neutral and depress the accelerator pedal. While listening to the solenoids, keep the pedal depressed and move the F&R switch to reverse.

Result:

You should hear the reverse solenoid click.

Action:

If the reverse solenoid clicks then go to the **REVERSE CONTACTS** section, otherwise continue with the next test.

TEST #2:

Check voltage from the main battery positive terminal to the negative coil terminal on the reverse solenoid. ***Forward Solenoid Figure 1.***

Result:

The voltage reading should equal the battery voltage.

Action:

If not equal to the battery voltage then check the solenoid negative bus bar for loose connections. **Stop here and repair the problem,** otherwise continue with the next test.

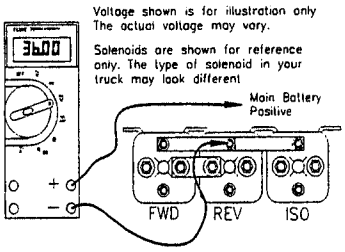

Forward Solenoid Figure 1

TEST #3:

Check the voltage across the reverse solenoid coil. ***Refer to Forward Solenoid Figure 2***

Result:

The voltage reading will be either battery voltage or zero.

Action:

If equal to the battery voltage then the reverse solenoid is bad and must be replaced. **Stop here and replace the Reverse Solenoid,** otherwise continue with the next test.

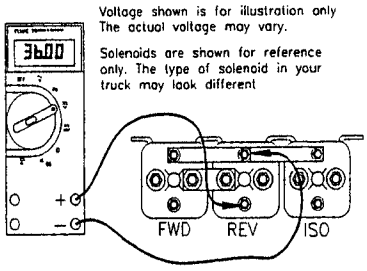

Forward Solenoid Figure 2

If not equal to the battery voltage, check the control wiring and the F&R switch for open or bad connections. **Stop here and repair the problem,** otherwise continue with to the next section Reverse Contacts.

REVERSE CONTACTS

TEST #1:

Connect the test light across the normally closed contacts of the *forward* solenoid, place the F&R switch in reverse, depress the accelerator pedal fully. ***Reverse Contacts Figure 1.***

Result:

The light should not come on.

Action:

If the light comes on when the pedal is depressed then the forward solenoid contacts are open and the solenoid must be replaced. **Stop here and repair the problem,** otherwise continue with the next test.

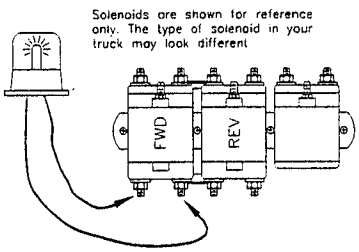

Reverse Contacts Figure 1

TEST #2:

Connect the test light across the normally open contacts of the *reverse* solenoid and depress the accelerator pedal fully. ***Refer to Reverse Contacts Figure 2.***

Result:

Refer to the ACTION, below.

Action:

If the light comes on when the pedal is depressed then the reverse solenoid contacts are open and the solenoid must be replaced. **Stop here and repair the problem.**

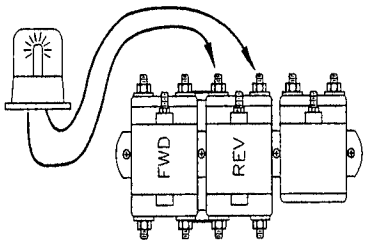

Reverse Contacts Figure 2

If the light did not come on at all, then check all power wiring for opens. **Stop here and repair the problem.**

REVERSE ONLY

TEST #1:

Place the F&R switch in neutral and depress the accelerator pedal. While listening to the solenoids, keep the pedal depressed and move the F&R switch to forward.

Result:

The Forward solenoid should click.

Action:

If the forward solenoid clicks then go to the **FORWARD CONTACTS** section, otherwise continue with the next test.

TEST #2:

Check voltage from the main battery positive terminal to the negative coil terminal on the forward solenoid. ***Refer to Reverse Figure 1.***

Result:

The voltage reading should equal the battery voltage.

Action:

If not equal to the battery voltage then check the solenoid negative bus bar for loose connections. **Stop here and repair the problem,** otherwise continue with the next test.

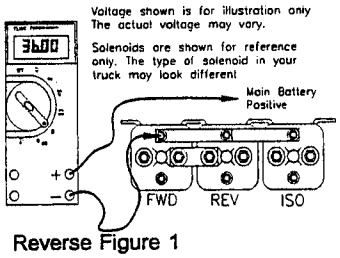

Reverse Figure 1

TEST #3:

Check the voltage across the forward solenoid coil. ***Refer to Reverse Figure 2.***

Result:

Refer to the Action below.

Action:

If equal to the battery voltage then the forward solenoid is bad and must be replaced. **Stop here and repair the problem,** otherwise continue with the next test.

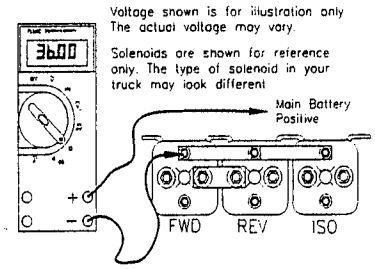

Reverse Figure 2

If not equal to the battery voltage, check the control wiring and the F&R switch. **Stop here and repair the problem,** otherwise continue with the next section Forward Contacts.

FORWARD CONTACTS

TEST #1:

Connect the test light across the normally closed contacts of the *reverse* solenoid, place the F&R switch in forward and depress the accelerator pedal fully. ***Refer to Fwd Figure 1.***

Result:

The light should not come on.

Action:

If the light comes on when the pedal is depressed then the reverse solenoid contacts are open and the solenoid must be replaced. **Stop here and repair the problem,** otherwise continue with the next test.

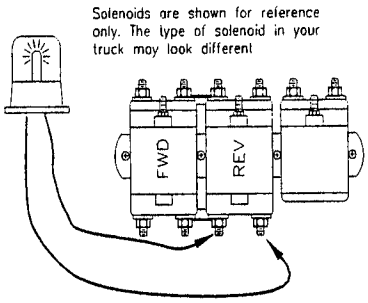

Fwd Figure 1

TEST #2:

Connect the test light across the normally open contacts of the *forward* solenoid and depress the accelerator pedal fully. ***Refer to Fwd Figure 2.***

Result:

Refer to Action below.

Action:

If the light comes on when the pedal is depressed then the forward solenoid contacts are open and the solenoid must be replaced. **Stop here and repair the problem.**

If the light did not come on at all, then check all power wiring for opens. **Stop here and repair the problem.**

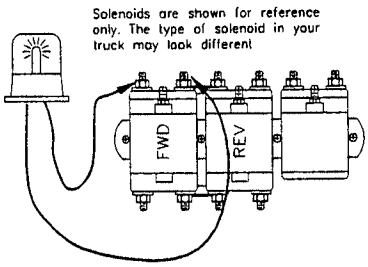

Fwd Figure 2

NOTE 10: If you reached this point without a solution then you may have an unanticipated problem or have made an error during testing.

SPECIAL TROUBLESHOOTING

Read symptoms carefully, the symptoms must be exactly as stated to go to the proper section. If your symptoms are different from what is represented here, you have an unanticipated failure and should contact your Taylor-Dunn service representative.

Eliminate all possible mechanical problems before starting the electrical troubleshooting. Make sure your batteries are in good condition and fully charged. Some examples of mechanical problems that could be misinterpreted as an electrical problem;

- Dragging brakes
- Binding drive gears
- Tight or frozen differential case bearings
- Tight or frozen wheel bearings
- Overloaded truck (refer to vehicles manual for load restrictions)
- The truck should be able to be pushed easily by hand on a hard level surface.

Continuous testing under high current could lead to overheating and failure of otherwise good components. ***Do not*** perform tests that involve high current for more that 2 seconds at a time. Allow 5 minutes between high current tests for cooling.

DURING ALL TESTS

Both drive wheels are to be supported off the ground by jack stands with the front wheels blocked.

After any repairs are made completely test vehicle before lowering the drive wheels to the ground.

Disconnect both of the battery leads during any maintenance, or before disconnecting any electrical component or wire.

Testing should be done with the drive wheels off the ground, supported with jack stands. In this situation, high current would be considered as any continuous reading over 65 Amps.

> NOTE 11: Your Amp meter may peak in excess of 200 Amps for a very short amount of time (milliseconds) and then level off to a normal reading. The normal current reading will vary depending on the model of truck, the motor installed, and the drive configuration.

	SYMPTOMS	GO TO
➢	Runs slow in forward and reverse with normal motor current.	ACCELERATOR MODULE (Previous section)
➢	Runs slow in both directions plus high armature and field current in both directions. NOTE: Armature and field current should be equal.	MOTOR
➢	Runs slow in both directions plus high armature current in both directions. NOTE: Field current will be very low.	SOLENOIDS (this section)
➢ ➢	Runs normal in one direction only plus runs slow or lacks power in the opposite direction with high armature current in the opposite direction or; Accelerates slowly and exceeds normal speed in the opposite direction with high armature current only. NOTE: Field current will be very low in the opposite direction.	SOLENOIDS (this section)
➢	Accelerates slowly and exceeds normal speed in both directions plus high armature current. NOTE: Field current will be very low.	SOLENOIDS (this section)
➢	Full speed only.	PMC CONTROL
➢	Does not run in either direction plus there is noise from motor (hum or whine) with high field current and low armature current.	PLUGGING DIODE
➢	Excessive spark when connecting battery	ISO (this section)
➢	Does not run or runs very slow with low motor current and high battery current.	FREEWHEEL DIODE
➢	Jumps into high speed when direction is selected after depressing the accelerator pedal.	HPD

MOTOR

High motor current in both the field and the armature that is accompanied with a lack of power would indicate a shorted armature and\or field.

Another symptom that may exist is a jumping or stuttering at low speeds and/or the motor will not run unless the armature is manually rotated. If this symptom exists, it indicates that there may be open segments in the armature, worn out or stuck motor brushes. Visually inspect the brushes, if they are OK, continue with the testing below.

Disconnect the four motor wires and perform the following tests.

TEST #1:

Check continuity from 'A1' to the frame of the motor. ***Refer to Motor 1.***

Result

You should not get a continuity reading. The display should read -OL-.

Action:

If you have continuity from 'A1' to the frame of the motor then the motor armature or armature circuit (brushes) are shorted. **Stop here and repair the problem,** otherwise continue

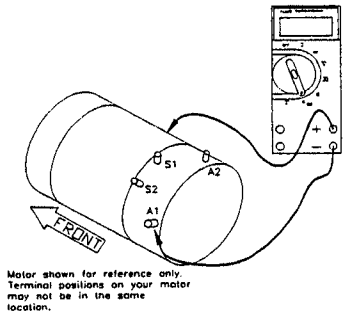

Motor Figure 1

with the next test.

TEST #2:

Check continuity from 'S1' to the frame of the motor. ***Refer to Motor Figure 2.***

Result

You should not get a continuity reading. The display should read -OL-.

Action:

If you have continuity from 'S1' to the frame of the motor then the motor field is shorted. **Stop here and repair the problem,** otherwise continue to Motor Inspection.

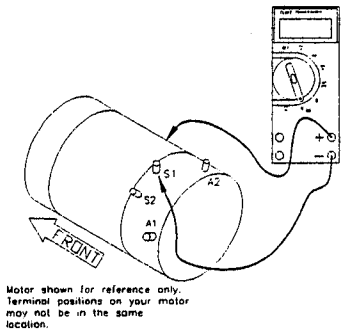

Motor Figure 2

Motor Inspection

1. Remove and disassemble the motor.
2. Visually inspect the inside of the brush end housing. If you can see any silver specs of metal around the inside of the housing, it indicates that the armature has overheated and melted the solder around the commutator. The armature is bad and the motor must be replaced. **Stop here and repair the problem,** otherwise continue with the next TEST #3.
3. Visually inspect the armature wires where they loop around at the shaft end of the armature. The insulation should be a light to medium reddish brown color. If the insulation is dark brown to black or the insulation is cracked and peeling then the armature has been over-

heated and burnt, the motor must be replaced. **Stop here and repair the problem,** otherwise continue with the next TEST #3.

TEST #3:

Perform a continuity test around the armature commutator. Place one of the test leads on a single commutator segment. While holding the first test lead on the segment, check the continuity to the other segments around the commutator. ***Refer to Motor Figure 3.***

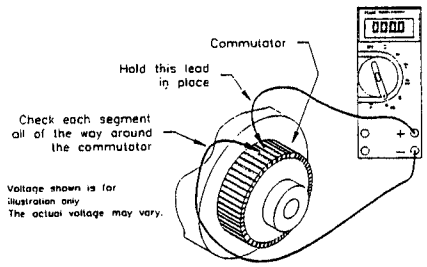

Motor Figure 3

Result:

The meter reading should be 0000.

Action:

If you find an open segment the armature is bad and the motor must be replaced. **Stop here and repair the problem.**

NOTE 12: If you reached this point without a solution then you may have an unanticipated problem or have made an error during testing.

PMC CONTROL

Disconnect the wire from the 'M-' terminal on the PMC control and tape it off to prevent electrical contact. Turn the key-switch on, close all interlock switches (if equipped) and depress the accelerator pedal to engage the first micro switch *only* (creep speed) and perform the following tests

TEST #1:

Test the voltage at pin #2 on the PMC controller. ***Refer to PMC Figure 1.***

Result

The meter reading should be between 6 and 6.5Volts.

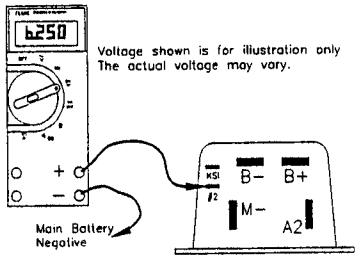

PMC Figure 1

Action:

If the voltage at pin #2 is not 6 to 6.5 volts then go to the **ACCELERATOR MODULE** in the previous section, otherwise continue with TEST #2.

TEST #2:

Test the voltage across 'B+' and 'M-' on the PMC control.

Result:

The meter reading should not be equal to the battery voltage. ***Refer to PMC Figure 2.***

Action:

If you have full battery voltage then the PMC control is shorted and must be replaced. **Stop here and repair the problem,** otherwise continue with the next test.

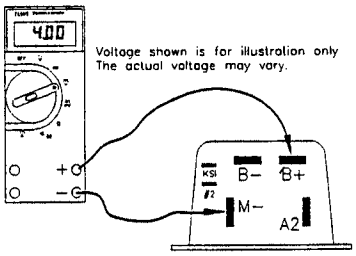

PMC Figure 2

If the voltage at pin #2 is correct and the voltage at 'M-' is correct then there is a short in the harness between the wire connected to the PMC 'M-' and

main battery negative. **Stop here and repair the problem.**

NOTE 13: If you reached this point without a solution then you may have an unanticipated problem or have made an error during testing.

PLUGGING DIODE

Remove the wires from the 'B+' and 'A2' terminals on the PMC control and perform the following test.

TEST #1:

Using the diode test function on your DMM check for the presence of a diode across 'B+' and 'A2' on the PMC control. ***Refer to Diode Figure 1.***

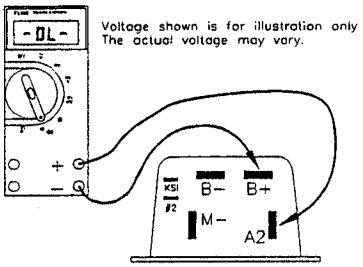

Diode Figure 1

Result:

This should read as an open connection. The meter reading will be -OL-.

Action:

If you find this diode shorted then the PMC control must be replaced. **Stop here and repair the problem.**

NOTE 14: If you reached this point without a solution then you may have an unanticipated problem or have made an error during testing.

FREEWHEEL DIODE

Remove the wires from the 'B+' and 'M-' terminals on the PMC control and perform the following test

TEST #1:

Using the diode test function on your DMM check for the presence of a diode across 'B+' and 'M-' on the PMC control. ***Refer to Diode Figure 2.***

Result:

This should read as an open connection. The meter reading will be -OL-.

Action:

If you find this diode shorted then the PMC control must be replaced. **Stop here and repair the problem.**

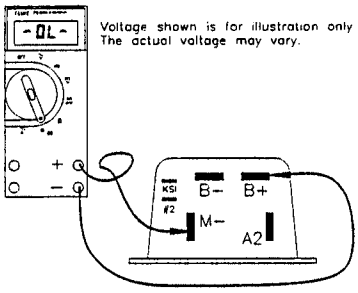

Diode Figure 2

NOTE 15: If you reached this point without a solution then you may have an unanticipated problem or have made an error during testing.

ISO

Remove the wires and the resistor from the ISO solenoid and perform the following tests.

TEST #1:

Test continuity across the ISO power contacts. ***Refer to ISO Figure 1.***

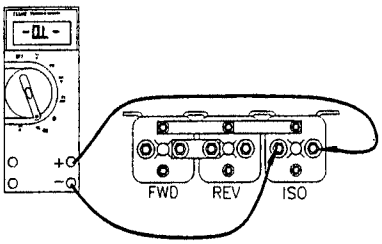

ISO Figure 1

Result:

The meter should autorange or show an OL on the display.

Action:

If the meter reading is not -OL- then the contacts are closed, the contactor should be replaced. **Stop here and replace the ISO solenoid,** other wise continue to TEST #2.

TEST #2:

Disconnect and test the ISO resistor. Connect the meter to each end of the resistor and measure the resistance. ***Refer to ISO 2.***

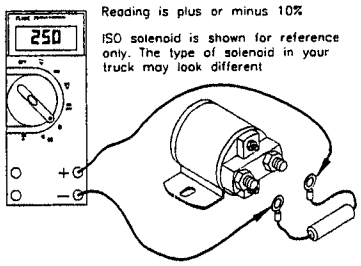

ISO Figure 2

Result:

The meter reading should be 250 (+/-10%) 225 to 275.

Action:

If it is not 250 ohms (+/-10%) then replace the resistor. **Stop here and repair the problem.**

NOTE 16: If you reached this point without a solution then you may have an unanticipated problem or have made an error during testing.

SOLENOIDS

There is a very slight possibility that a failure in the motor could cause these symptoms. Perform the tests covered in the **MOTOR** section first. If the motor is OK, continue with the following tests.

Remove the wires from the 'S1' and 'S2' terminals on the motor. Remove the wire from the 'M-' terminal on the PMC control. Make sure none of these wires can come into electrical contact with the frame or any other wire.

With the key-switch on and the forward and reverse switch in neutral, perform the following tests.

TEST #1:

Check continuity from the motor 'A2' terminal to the wire that was connected to the motor 'S1' terminal. ***DO NOT*** make this test to the 'S1" terminal, just the wire. ***Refer to Solenoid Figure 1.***

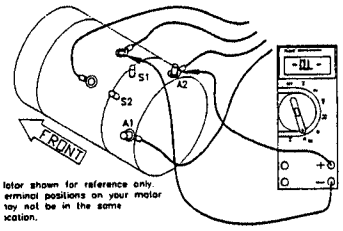

Solenoid Figure 1

Result:

This should read as an open connection. The meter reading will be -OL-.

Action:

If it reads as a short then one of the following has occurred;

- The reverse solenoid is shorted or,

- The wire connected to the motor 'S1' terminal is shorted to the wire connected to the motor 'A2' terminal or,
- The wire connected to the motor 'S1' terminal is shorted to the wire connected to the PMC 'A2' terminal.

Stop here and repair the problem, otherwise continue with TEST #2.

TEST #2:

Check continuity from the motor 'A2' terminal to the wire that was connected to the motor 'S2' terminal. ***DO NOT*** make this test to the 'S2" terminal, just the wire. ***Refer to Solenoid Figure 2.***

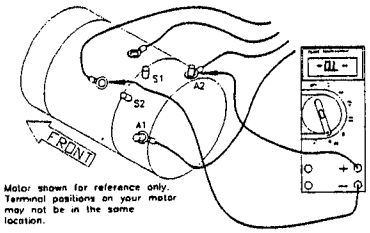

Solenoid Figure 2

Result:

This should read as an open connection. The meter reading will be -OL-.

Action:

If it reads as a short then one of the following has occurred;

- The forward solenoid is shorted or,
- The wire connected to the motor 'S2' terminal is shorted to the wire connected to the motor 'A2' terminal or,
- The wire connected to the motor 'S2' terminal is shorted to the wire connected to the PMC 'A2' terminal.

Stop here and repair the problem, otherwise continue with TEST #3.

With the key-switch on and the F&R switch in forward, depress the accelerator pedal and perform the following tests.

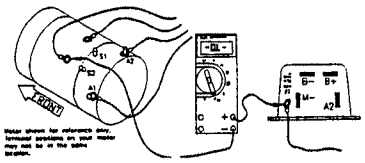

Solenoid Figure 3

TEST #3:

Check continuity from the wire that was connected to the PMC 'M-' terminal to the wire that was connected to the motor 'S2' terminal. ***Refer to Solenoid Figure 3.***

Result:

This should read as an open connection.

Action:

If it reads as a short then one of the following has occurred;

- The forward solenoid is shorted or,
- The wire connected to the PMC 'M-' terminal is shorted to the wire connected to the motor 'S2' terminal.

Stop here and repair the problem, otherwise continue with the next TEST #4.

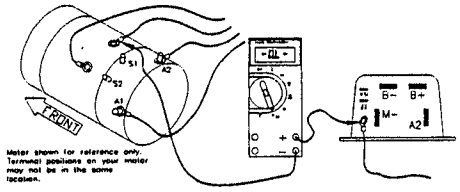

Solenoid Figure 4

With the key-switch on and the F&R switch in reverse, depress the accelerator pedal and perform the following tests.

TEST #4:

Check continuity from the wire that was connected to the PMC 'M-' terminal to the wire that was connected to the motor 'S1' terminal. ***Refer to Solenoid 4.***

Schematic Diagrams

On the following pages you will find the schematic diagrams for the B1-50. Please use the diagram to help with the troubleshooting, and repair of these vehicles electrical systems.

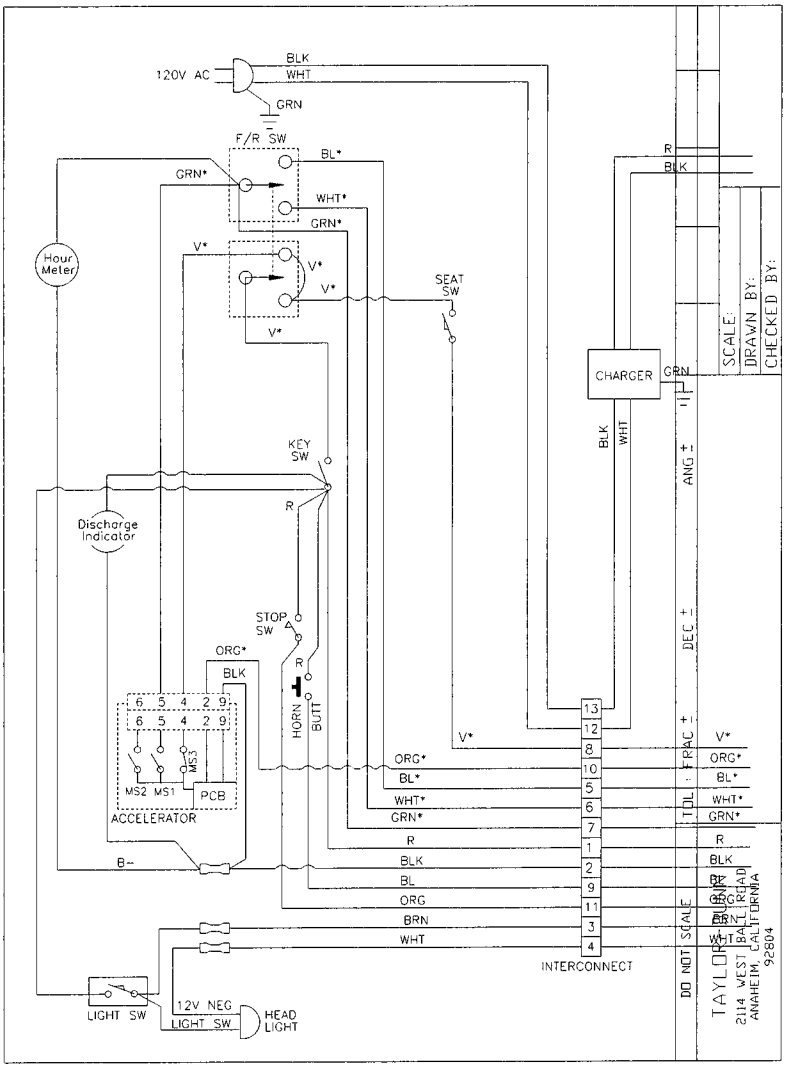

B1-50 36-Volt System

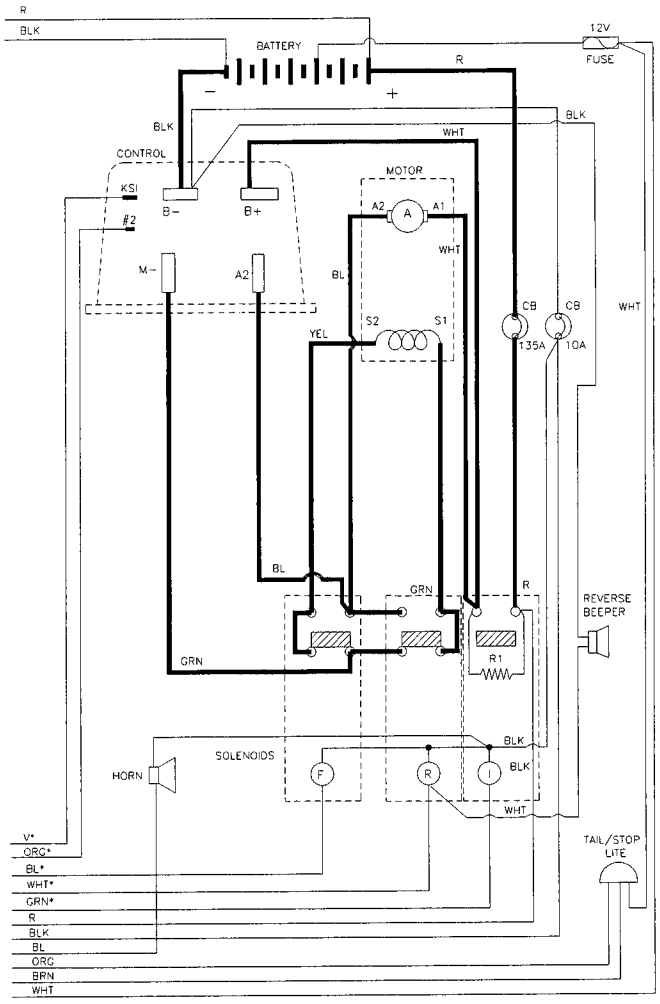

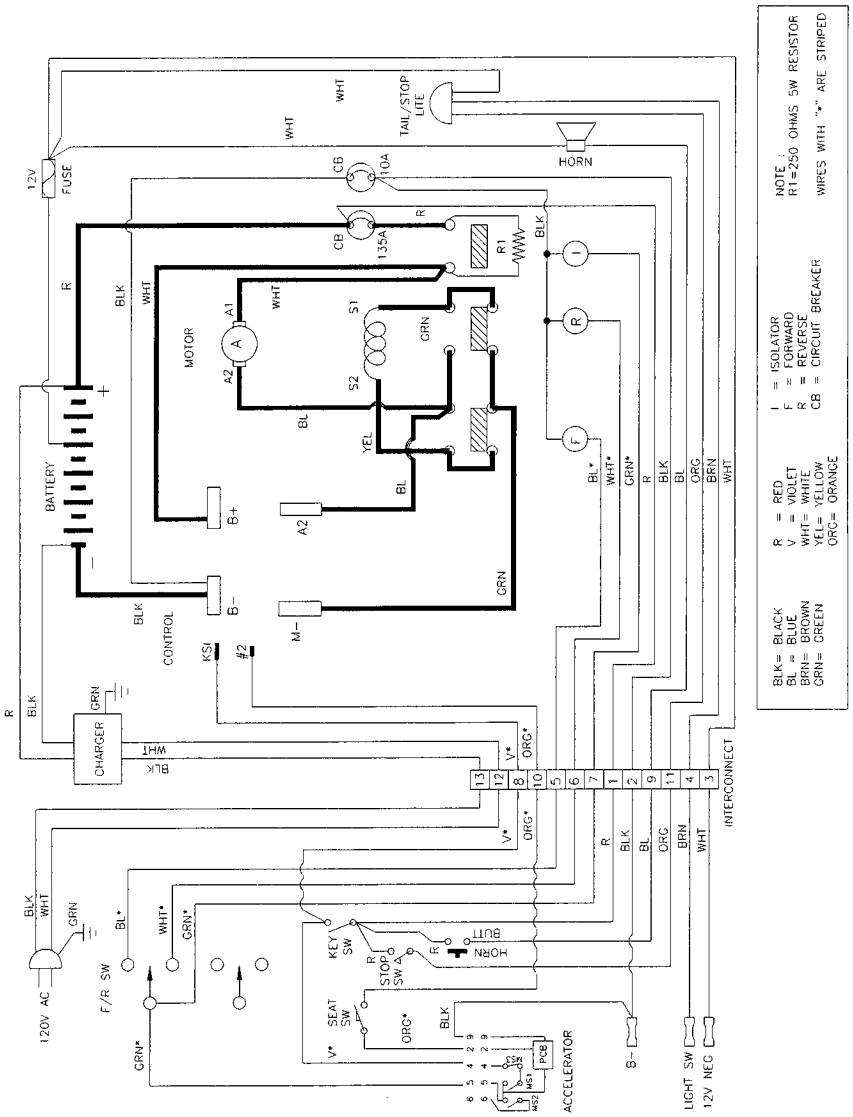
12v
FUSE
BATTERY
CHARGER
120V AC
F/R SW
MOTOR
CONTROL
KSI
#2
B+
B-
M-
A1
A2
S1
S2
CB
135A
10A
R1
TAIL/STOP LITE
HORN
KEY SW
STOP SW
SEAT SW
HORN BUTT
ACCELERATOR
LIGHT SW
12V NEG
INTERCONNECT
NOTE:
R1=250 OHMS 5W RESISTOR
WIRES WITH "*" ARE STRIPED
BLK= BLACK
BL = BLUE
BRN= BROWN
GRN= GREEN
R = RED
V = VIOLET
WHT= WHITE
YEL= YELLOW
ORG= ORANGE
I = ISOLATOR
F = FORWARD
R = REVERSE
CB = CIRCUIT BREAKER

NOTES

Lestronic II Charger Troubleshooting

Operating Instructions and Theory of Operation
Lester Lestronic II battery charger

The Lestronic II chargers are designed as semiautomatic chargers. The charger turns itself on when the built in charger is plugged into the wall outlet or, when the portable charger is plugged into the batteries. As the battery charges, the battery voltage rises. The charger periodically checks the battery voltage and compares it to the previous reading. When the battery voltage stops rising a predetermined amount then the batteries are no longer accepting a charge and the charger shuts off. The charger will not turn back on unless the AC cord on built in chargers is disconnected from the wall outlet or, the DC plug on portable chargers is disconnected from the batteries.

The charger does not check the current state of charge when it is plugged in, it assumes that the batteries require charging when it is connected. For this reason, it is recommended to discharge the batteries approximately 50% (1175-1200 as indicated on a hydrometer) before connecting the charger. If the charger is connected before the batteries are discharged 50%, the batteries may enter an overcharge state before the charger can sense that the batteries are no longer accepting a charge.

The relay that operates the charger is powered by the batteries being charged. If the voltage on the batteries to be charged is less than approximately 65% of the rated charger DC voltage, the relay will not pick up and the charger will not turn on. In this situation, a manual charger would have to be used to bring the battery voltage up so that the Lestronic charger can sense that they are connected and turn itself on.

Battery Charger Troubleshooting

In typical installations, the charger will remain on for up to 12 hours depending on the state of charge of the battery when the charge cycle was started.

A charger could remain on for longer than 12 hours if;

- The charging cycle is interrupted at any time during the charging cycle.
- Defective batteries causing a fluctuating DC voltage that confuses the charger.
- A brownout (drop in AC line voltage) during the charging cycle.
- An electrically noisy charging environment.
- A charger could turn off in less than 12 hours but still show symptoms of overcharging if;
- The batteries were not discharged to 50% before connecting the charger.
- The electrolyte in the batteries is too high (boil over).
- The electrolyte in the batteries is too low (excessive gassing or sulfur smell).

  NOTE 1:The only way to test the charger to see if it is turning off correctly is to monitor the battery voltage and the electrolyte specific gravity during the charging cycle.

Specific gravity

Using a hydrometer take the specific gravity reading of several cells the charge cycle at 1-hour intervals. If the specific gravity of the electrolyte does not rise for three consecutive readings and the charger does not shut off then the charger is running too long.

Battery voltage

Using an accurate 5-1/2 digit digital voltmeter (Instek model GDM8055 or equivalent), monitor the battery voltage during the charging cycle. Take readings every 30 minutes. If the battery voltage does not increase 0.012 volts in two consecutive readings then the charger is running too long.

Test Equipment Required for Troubleshooting:

Digital multimeter (DMM) with diode and capacitor test function, FLUKE 79 model shown.

IMPORTANT NOTES and INSTRUCTIONS

- This troubleshooting guide assumes that you are familiar with the use of a digital multimeter including, voltage tests, continuity tests and diode testing. If you do not understand any part of these tests, you should refer testing to a qualified technician.
- Make sure the AC electrical socket the charger is plugged into is in good condition.
- Make sure that the AC voltage at the electrical socket is the same as the AC voltage on the charger nameplate.
- Make sure the batteries are in good condition and no less than 80% discharged as per hydrometer.

  NOTE 2: A fully discharged battery will not activate the charger.
- The battery voltage must be above approximately 65% of the chargers rated DC voltage. If the batteries are below approximately 65% of the chargers rated DC voltage, the charger will not turn on (refer to 3rd paragraph on page one).
- If the charger exhibits intermittent problems, it must be in the failed mode for troubleshooting.
- Battery volts = Full voltage available at batteries at the time of test.
- This test procedure must be performed in the order it was written. If you start in the middle or skip sections when not instructed to do so, you may not get the proper results. If the test result is good, then proceed to the next test or go to the next section if instructed to do so.

DURING ALL TESTS

- Both drive wheels are to be supported off the ground by jack stands with the front wheels blocked.
- The charger cabinet must remain electrically grounded.
- Disconnect both of the battery leads and unplug the charger from the AC source before disconnecting any electrical component or wire.

The following tests are for a built-in charger. If you have a portable charger go to page S-10.

Troubleshooting for Built-in Charger

Disconnect the charger from the AC source.
Locate the charger harness connectors where the charger harness is connected to the trucks control harness. There will be two 10-gauge and two 14-gauge wires.
Slide the insulators off the connectors on the two 10-gauge wires and perform the following tests.

1) Test the voltage from the red wire to main battery negative. This

⚠CAUTION **Make sure these two wires do not come into electrical contact with any other object.**

voltage should be equal to the battery voltage. If it is less than the battery voltage then this wire is broken or has a bad connection. Stop here and repair the problem.

2) Test the voltage from the red 10-gauge wire (+) to the other 10-gauge wire (white or black depending on model). This voltage should be equal to the battery voltage. If it is less than the battery voltage, then the white (or black) wire is broken or has a bad connection. Stop here and repair the problem.

- Slide the insulators back onto the connectors on the two 10-gauge wires.
- Slide the insulators off the connectors on the two 14-gauge wires.

⚠CAUTION **High Voltage. Do not touch the 14-gauge wires and make sure these two wires do not come into electrical contact with any other object.**

- Connect the charger to the AC source and perform the following tests.

1) Test the voltage across the two 14-gauge wires. This voltage should be the same as the voltage at the AC receptacle (rated voltage of the charger). If it is less than the rated AC voltage of the charger then the 14-gauge white or black wire(s) is broken or has a bad connection between the charger connectors and the AC plug. Stop here and repair the problem.

- Disconnect the charger from the AC source.
- Disconnect the batteries.
- Disconnect the charger from the trucks harness.
- Remove the charger from the truck.
- Remove the charger cover and perform the following tests.

⚠WARNING

HIGH VOLTAGE may be stored in the capacitor. Discharge the capacitor before continuing. Connect a 2k ohm resistor across the capacitor terminals for 10 seconds. Do not touch the capacitor terminals with your hands. The resistor should be held with a pair of insulated pliers.

1) Inspect the internal wiring of the charger and repair as required.

2) Check the continuity of both fuse links and replace if bad.

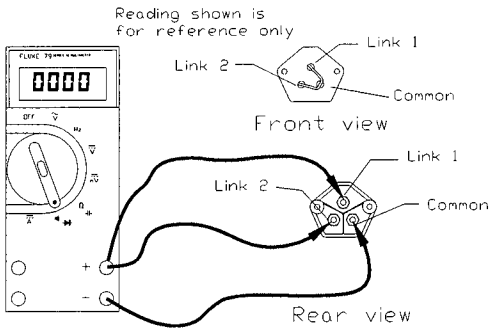

3) Disconnect one transformer lead from the capacitor. Test the capacitor using the capacitor test function of your meter. It is a 6-microfarad capacitor. If the capacitor is bad, it must be replaced. **Stop here and repair the problem.**

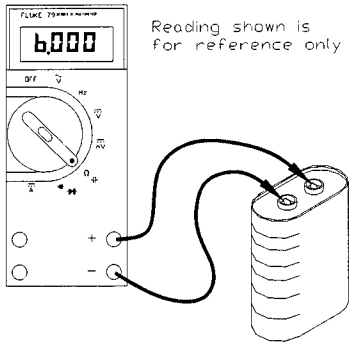

4) Reconnect the transformer lead to the capacitor and disconnect one transformer lead from one of the diodes. Test each of the diodes using the diode test function of your meter. If either one of the diodes are bad, replace the diode assembly. **Stop here and repair the problem.**

5) Reconnect the lead to the diode.

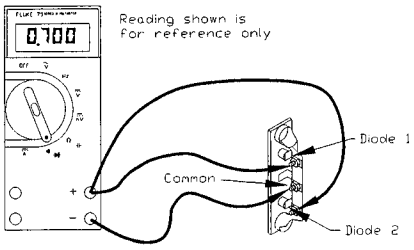

6) Reconnect the charger to the trucks harness and slide the wiring insulators back into place. Connect the charger to the AC source and perform the following tests.

⚠CAUTION

High Voltage inside the charger. Do not touch any internal components with your hands or any conductive tools while the charger is plugged in. Once the charger has been plugged in refer to the High Voltage Capacitor Warning on previous page.

7) Test the voltage from the fuse assembly (-) to the diode block (+). This voltage should be equal to the battery voltage. If it is less than the battery voltage then the wires from the harness connectors to the charger are bad. **Stop here and repair the problem.**

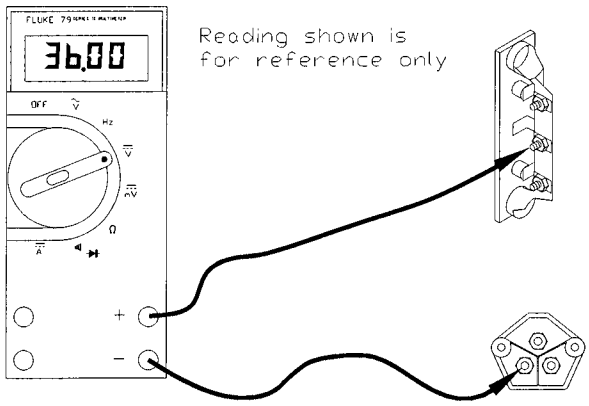

8) Test the voltage across the white and black wires that are connected to the timer board. This voltage should be the same as the rated AC voltage of the charger. If it is less than the rated AC voltage of the charger then the wires from the harness connectors to the charger are bad. **Stop here and repair the problem.**

9) If the timer relay does not pick-up (click) when the AC source is connected, then the timer control circuit or the relay is bad. The timer must be replaced as an assembly; the relay is not available separately. **Stop here and repair the problem.**

10) Test the AC voltage across the transformer primary circuit. The transformer primary consists of the two solid wires with the brown fiber insulator that are connected to the timer board. This voltage should be the same as the rated AC voltage of the charger. If it is less than the rated AC voltage of the charger, then the timer relay is bad. The timer must be replaced as an assembly; the relay is not available separately. **Stop here and repair the problem.**

11) Test the AC voltage across the transformer low voltage secondary circuit. The transformer low voltage secondary circuit consists of the two solid wires with the brown fiber insulator that are connected to the two diodes. The voltage here will vary depending on the state of charge on the batteries. Look for a voltage between 208% and 250% of the rated DC voltage of the charger. If you do not get a voltage between 208% and 250% of the rated DC voltage of the charger, the transformer is bad and must be replaced. **Stop here and repair the problem.**

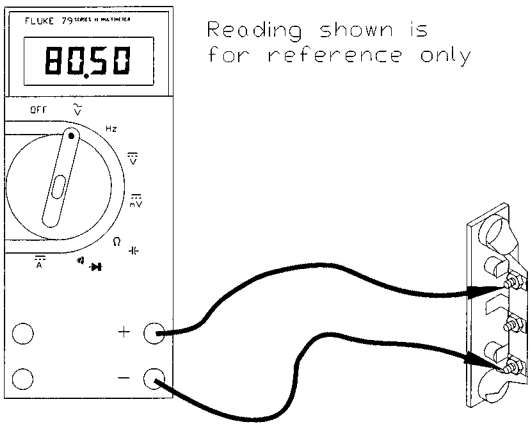

Troubleshooting for Portable Charger

Disconnect the charger from the AC source.

1) Test the voltage from the positive terminal on the DC receptacle to main battery negative. This voltage should be equal to the battery voltage. If it is less than the battery voltage then this wire is broken or has a bad connection. **Stop here and repair the problem.**
2) Test the voltage from the positive terminal on the DC receptacle to the negative terminal on the DC receptacle. This voltage should be equal to the battery voltage. If it is less than the battery voltage, then the wire on the negative terminal of the DC receptacle is broken or has a bad connection. **Stop here and repair the problem.**

Remove the charger cover and perform the following tests.

1) Inspect the internal wiring of the charger and repair as required.
2) Check the continuity of both fuse links and replace if bad.

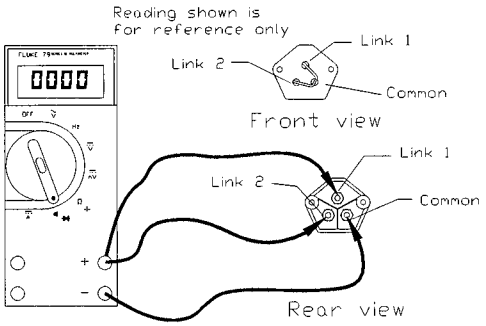

3) Disconnect one lead from the capacitor. Test the capacitor using the capacitor test function of your meter. It is a 6-microfarad capacitor. If the capacitor is bad, it must be replaced. **Stop here and repair the problem.**

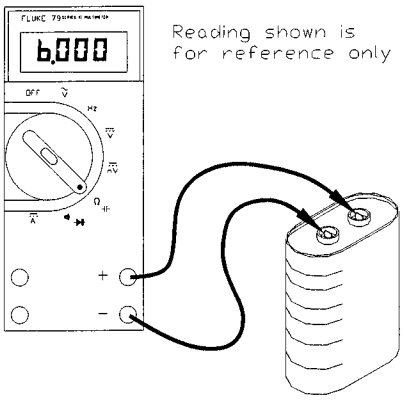

4) Reconnect the lead to the capacitor and disconnect one transformer lead from one of the diodes. Test each of the diodes using the diode test function of your meter. If either one of the diodes are bad, replace the diode assembly. **Stop here and repair the problem.**

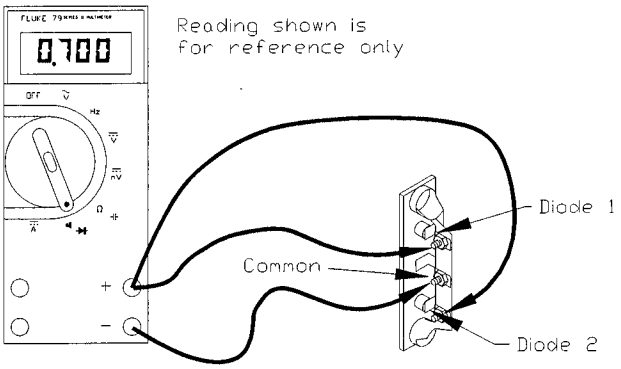

5) Reconnect the lead to the diode.

6) Connect the charger to the AC source.
   Insert the DC charger plug into the DC receptacle and perform the following tests.

⚠WARNING

High Voltage inside the charger. Do not touch any internal components with your hands or any conductive tools while the charger is plugged in. HIGH VOLTAGE may be stored in the capacitor. Discharge the capacitor before continuing. Connect a 2k ohm resistor across the capacitor terminals for 10 seconds. Do not touch the capacitor terminals with your hands. The resistor should be held with a pair of insulated pliers.

7) Test the voltage from the fuse assembly (-) to the diode block (+). This voltage should be equal to the battery voltage. If it is less than the battery voltage, DC cord is bad. **Stop here and repair the problem.**
8) Test the voltage across the white and black wires that are connected to the timer board. This voltage should be the same as the rated AC voltage of the charger. If it is less than the rated AC voltage of the charger then the AC cord is bad. **Stop here and repair the problem.**
9) If the timer relay does not pick-up (click) within 5 seconds of connecting the DC charger plug, then the timer control circuit or the relay is bad. The timer must be replaced as an assembly; the relay is not available separately. **Stop here and repair the problem.**
10) Test the AC voltage across the transformer primary circuit. This

voltage should be the same as the rated AC voltage of the charger. If it is less than the rated AC voltage of the charger, then the timer relay is bad. The timer must be replaced as an assembly; the relay is not available separately. **Stop here and repair the problem.**

11) Test the AC voltage across the transformer secondary circuit. The voltage here will vary depending on the state of charge on the batteries. Look for a voltage between 208% and 250% of the rated DC voltage of the charger. If you do not get a voltage between 208% and 250% of the rated DC voltage of the charger the transformer is bad and must be replaced. Stop here and repair the problem.

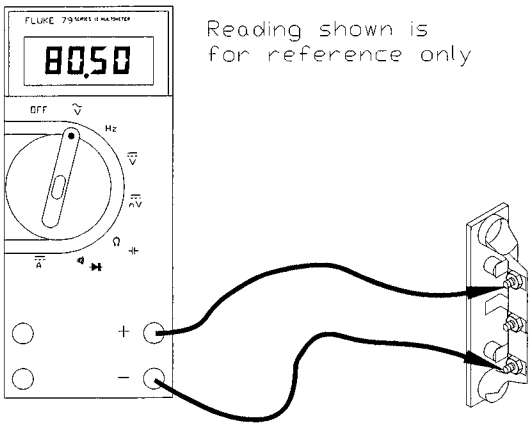

TAYLOR-DUNN®

Illustrated Parts List

TAYLOR-DUNN®

The Best Way To Go About Your Business

STANDARD FRONT AXLE

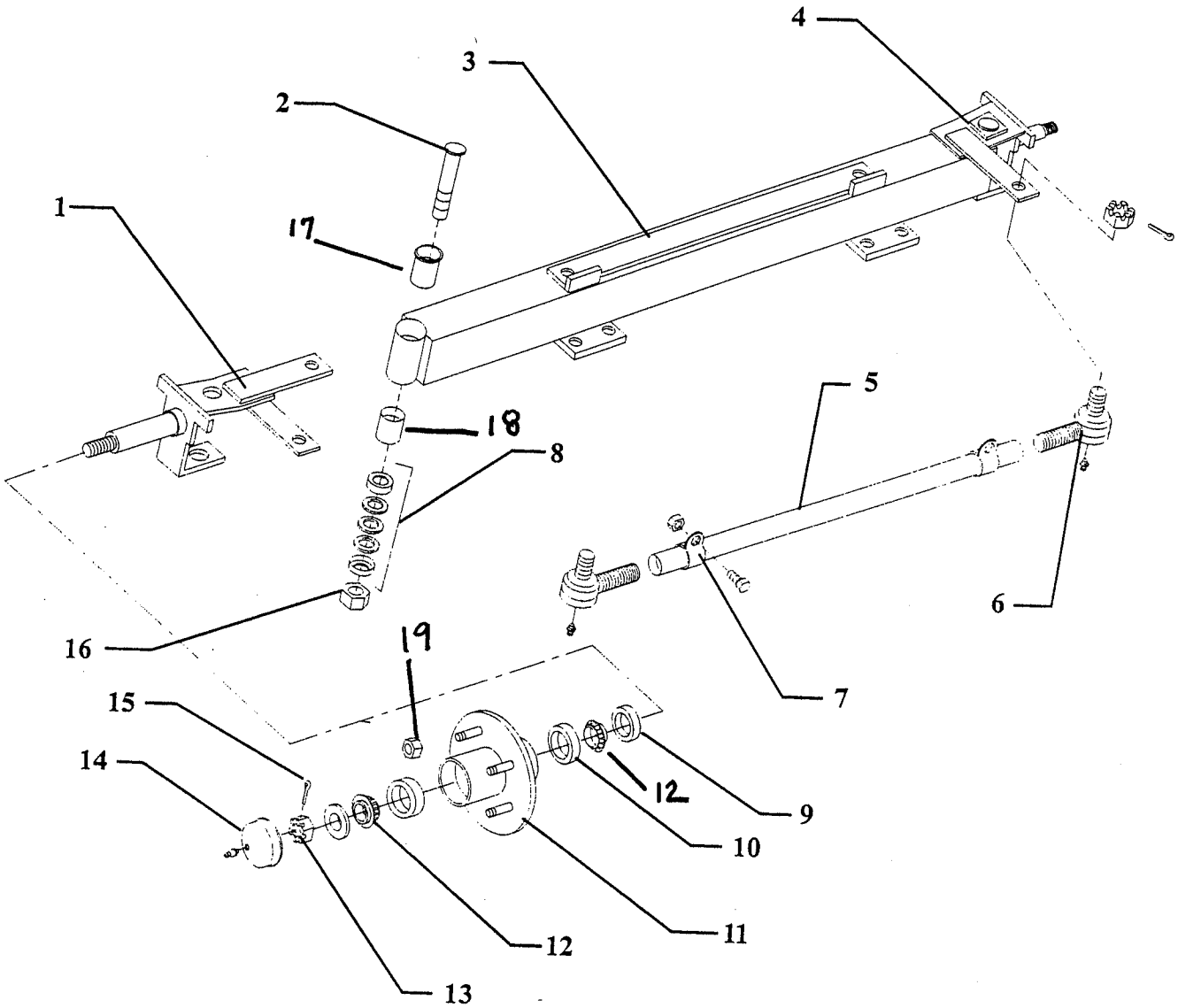

Front Axle

Item #	Part#	Description	QTY
1	14-240-06	Yoke, Left Side, w/out Brakes (Std)	1
2	21-009-11	King Pin	2
3	01-240-74	Front Axle Beam	1
4	14-240-05	Yoke, Right Side w/outBrakes (Std)	1
5	18-041-05	Steering Sleeve	1
6	86-501-98 86-501-99	Ball Joint, Left Ball Joint, Right	1 1
7	86-510-00	Ball Joint Clamp Assembly	2
8	80-309-10	Bearing Pack Assembly	2
9	45-338-00	Seal	2
10	80-103-00	Bearing Race	2
11	12-124-00	Hub, W/O Disc(Standard Axle W/O Brakes)	2
12	80-017-00	1" Bearing	2
13	88-239-85	3/4"NF, Slotted Nut	2
14	92-104-00	Dust Cap Grease Fitting (STD)	2
15	88-527-11	1/8" X 1" Steel Cotter Pin	2
16	88-289-81	Nut	2

17	32-200-00	Bushing 7/8 1D x 1 OD
18	32-204-00	Bushing, BRNZ 7/8 1 D x 1 OD, Groove
19	97-236-00	1/2" tapered lug nut

FRONT SUSPENSION

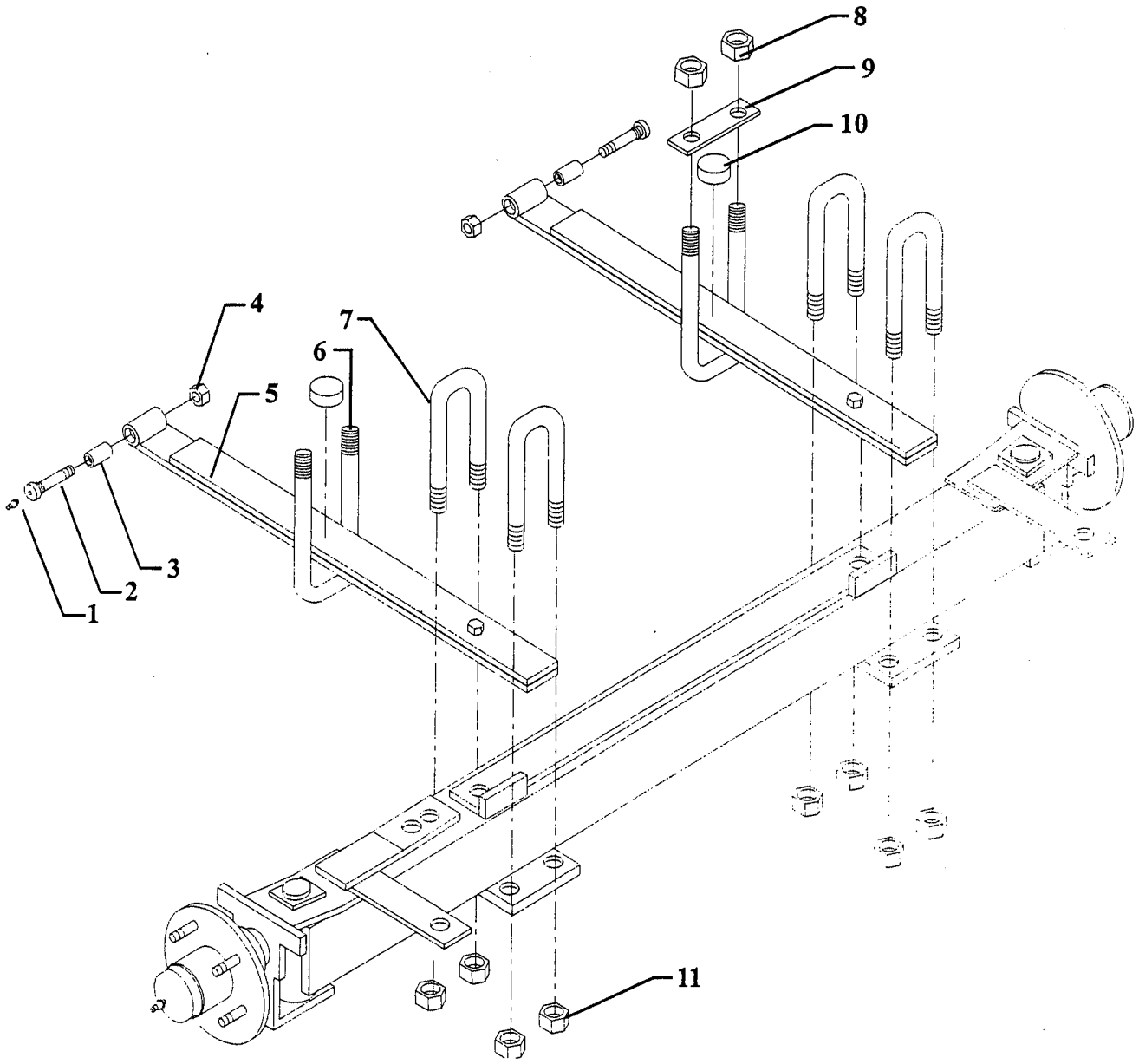

Front Suspension

Item#	Part#	Description	QTY
1	87-074-00	Grease Fitting (Zerk)	2
2	96-248-01	Bolt with Grease Fitting	2
3	32-213-00	Nylon Bushing	2
4	88-179-82	Lock Nut	2
5	85-506-05	2-Leaf, Leaf Sprig	2
6	96-118-00	U-Bolt, 6.5" Long	2
7	96-123-00	U-Bolt	4
8	88-149-81	Lock Nut	4
9	16-872-03	U-Bolt Strap	2
10	01-200-63	Front Spring Support	2
11	88-149-81	7/8"NC Lock Nut	8

16-865-06 Spring pad 2

STEERING GEAR

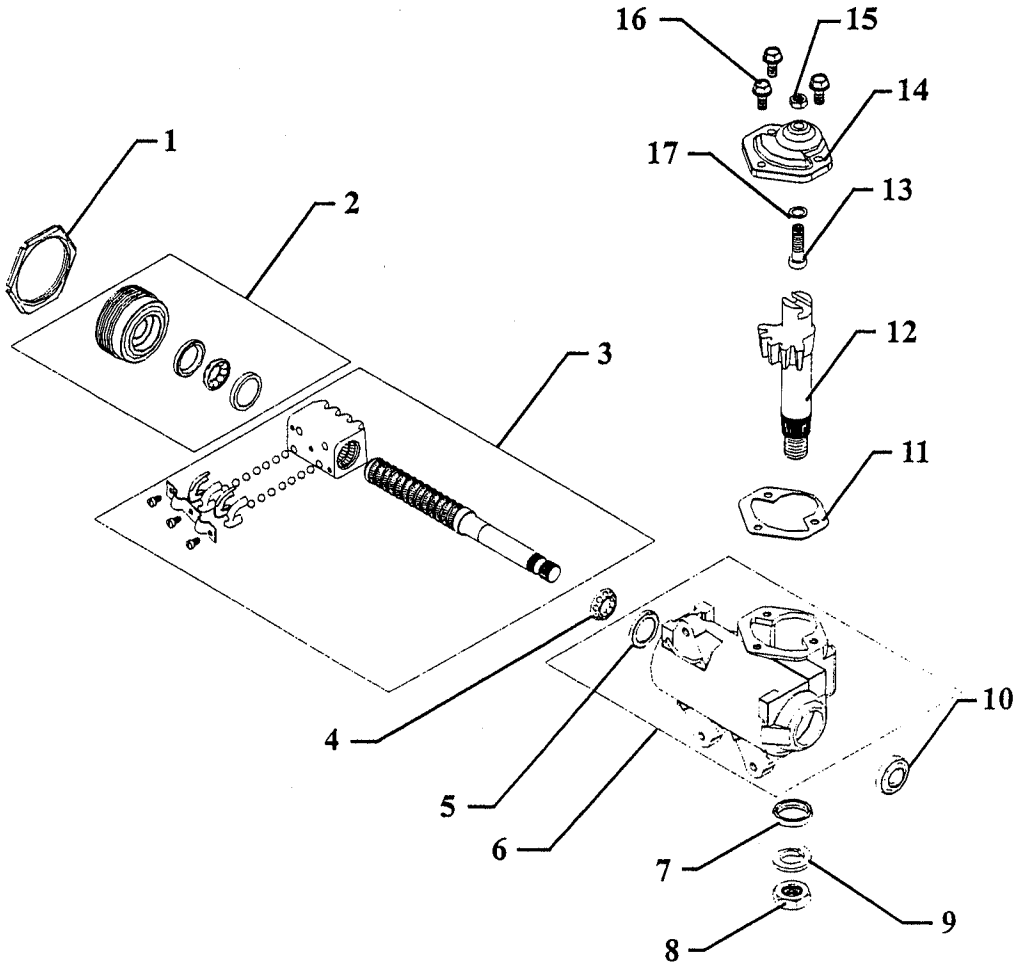

Steering Gear

Item#	Part#	Description	QTY
1	18-308-70	locknut, Worm Bearing Adjuster	1
2	18-308-71	Adjuster Assembly	1
3	18-308-72	Worm Assembly	1
4	18-308-23	Upper Worm Bearing, Cone	1
5	18-308-22	Upper Worm Bearing Cup	1
6	18-308-77	Steering Gear Housing	1
7	18-308-78	Seal, Pitman Shaft	1
8	18-308-80	Nut, Pitman Shaft	1
9	18-308-81	Lockwasher, Pitman Shaft	1
10	18-308-79	Seal, Worm Shaft	1
11	18-308-82	Side Cover Gasket	1
12	18-308-76	Pitman Shaft	1
13	18-308-75	Lash Adjuster	1
14	18-308-84	Side Cover	1
15	18-308-86	Nut, Lash Adjuster	1
16	18-308-83	Side Cover Bolt	3
Not Shown	18-308-85	Shim Kit	1

STEERING ASSY

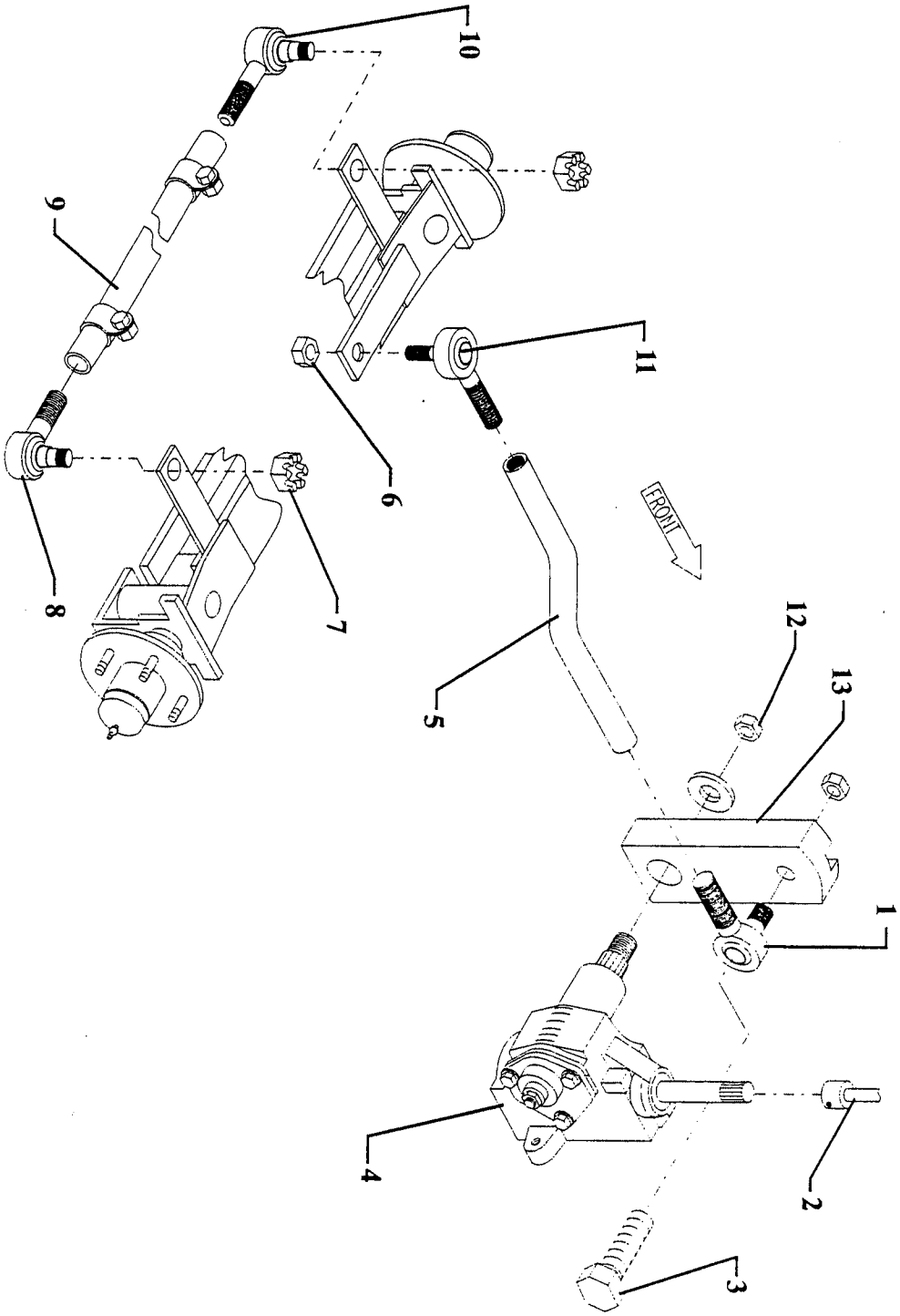

Steering Assembly

Item#	Part#	Description	QTY
1	86-518-01	Rod End, Drag Link	1
2	20-031-44	Steering Shaft Assy with Clamp	1
3	88-111-20	Bolt	1
4	18-308-21	Steering Gear	1
5	50-002-03	Drag Link	1
6	88-119-81	Nut	2
7	88-159-85	1/2" Slotted Nut	2
8	86-501-99	Ball Joint(Right Side)	1
9	18-041-05	Steering Sleeve Assembly	1
10	86-501-98	Ball Joint(LeftSide)	1
11	86-510-00	Rod End/Ball Joint (For Drag Link)	1
12	88-119-80	Nut	1
13	18-640-00	Pitman Arm	1

DRAG LINK

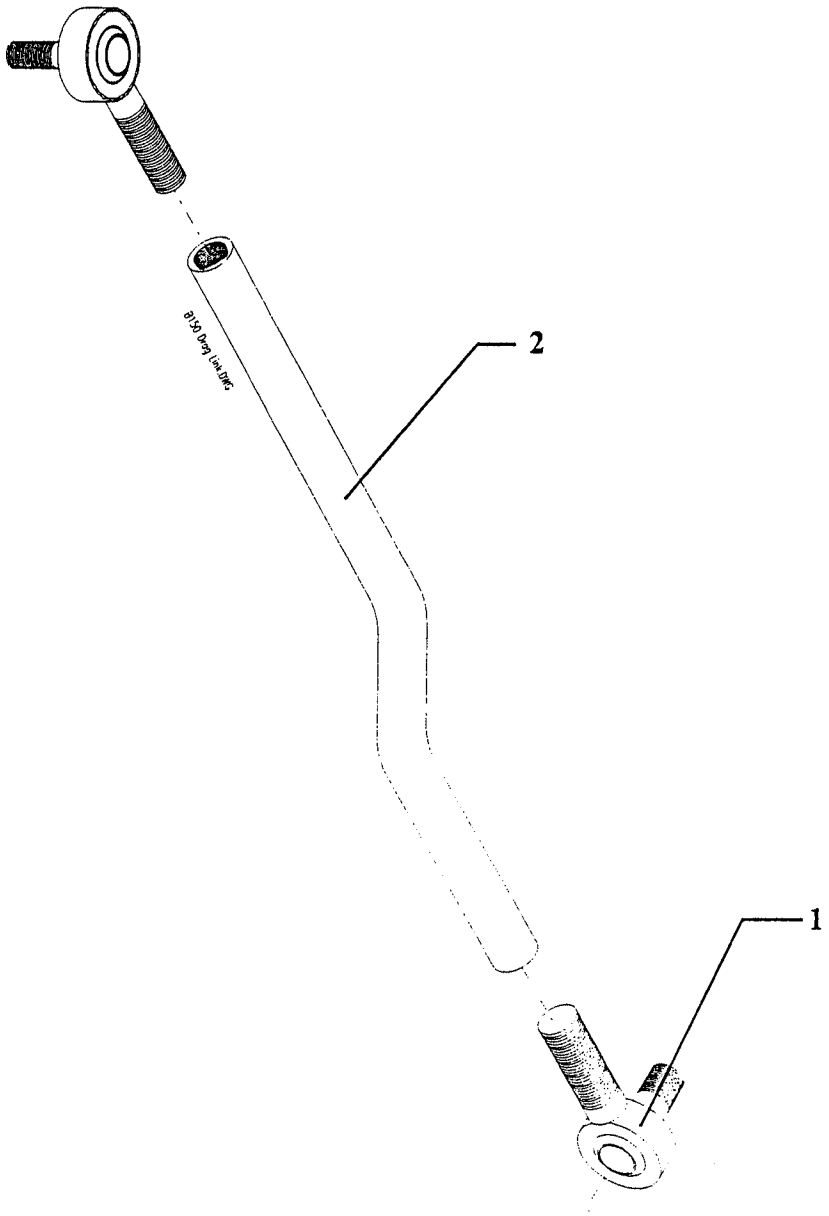

Drag Link

Item#	Part#	Description	QTY
1	86-518-00	Rod End, RH Thread	1
	86-518-01	Rod End, LH Thread	1
2	50-002-03	Drag Link	1

PARK BRAKE LINKAGE

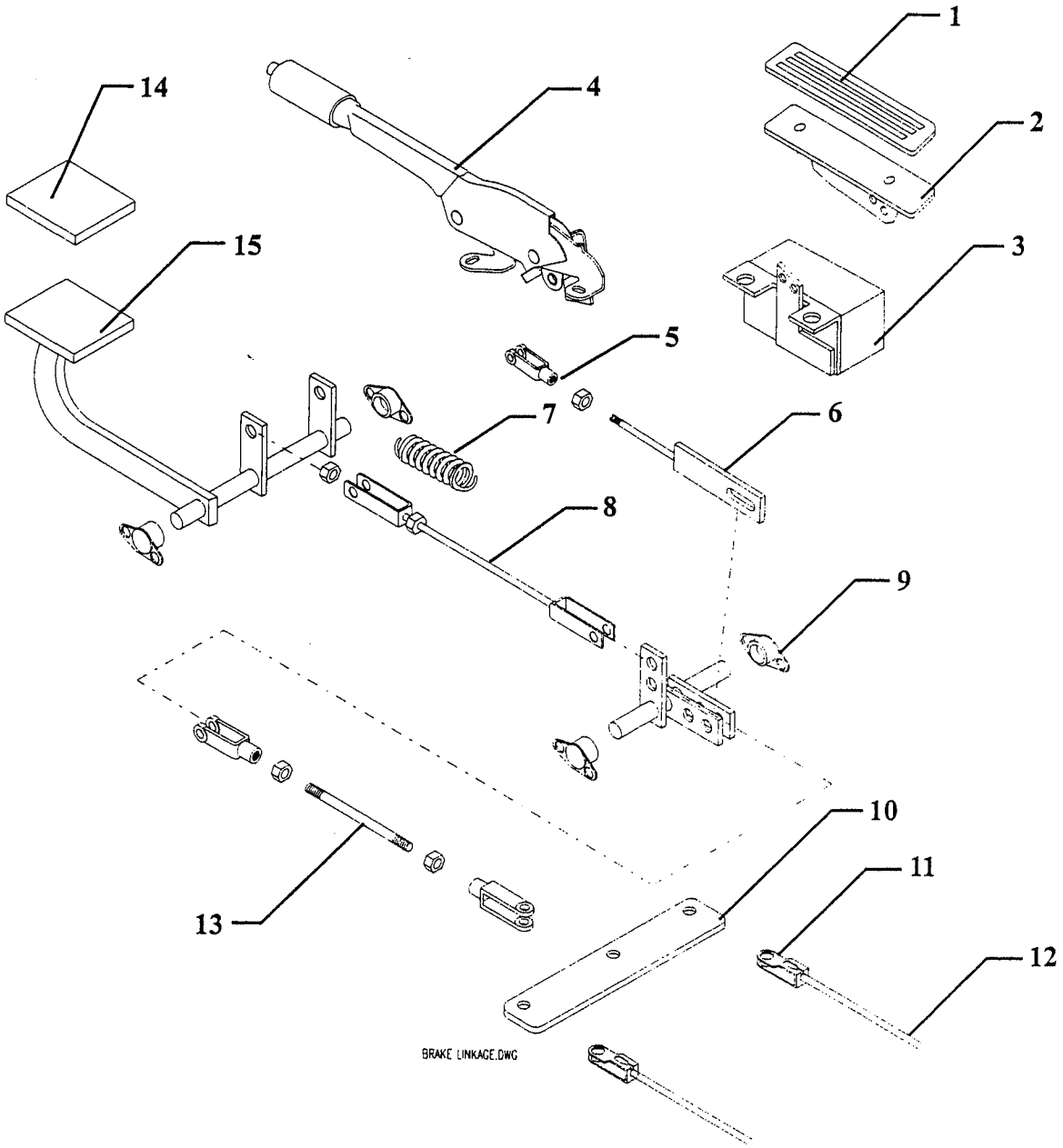

Park Brake Linkage

Item#	Part#	Description	QTY
1	98-254-00	Accelerator Pedal	1
2	98-254-25	Weldment, Accelerator Pedal	1
3	62-033-00	Accelerator Module	1
4	51-344-20	Park Brake Lever	1
5	96-763-00	Clevis	3
6	01-380-62	Hand Brake Linkage	1
7	82-250-00	1" X 3-7/8" Spring	1
8	96-818-10	Adjustable Brake Cable	1
9	80-410-20	Flanged Bearing	4
10	01-200-47	Equalizer	1
11	96-754-00	Clevis	2
12	96-826-12	Brake Cable	2
13	01-200-51	Threaded Rod, Brake	1
14	98-200-00	Rubber Brake Pad	1
15	01-432-98	Brake Pedal Weldment	1

REAR MECHANICAL DRUM BRAKES (STANDARD)

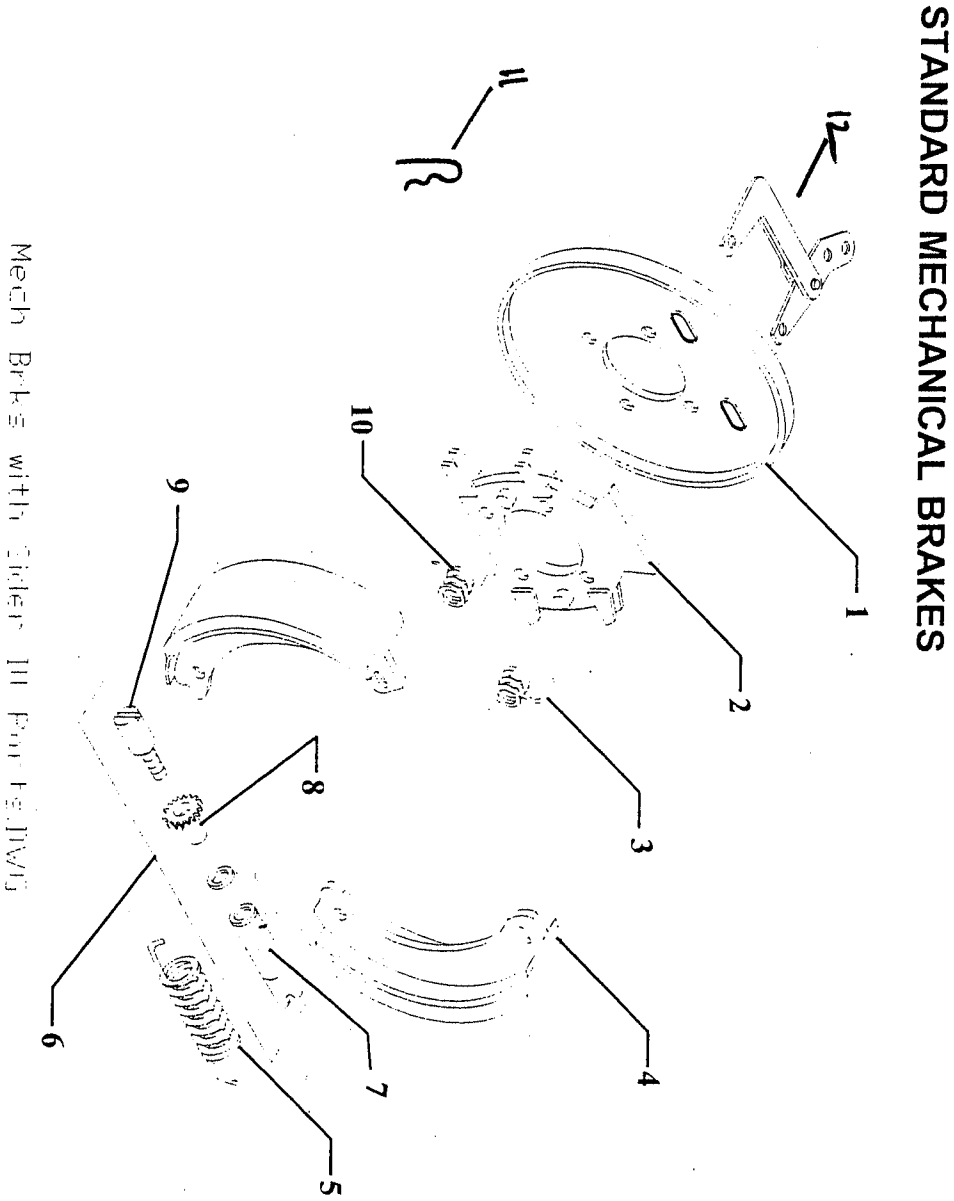

Rear Mechanical Drum Brakes (Standard)

Item#	Part#	Description	QTY
1	41-347-00	Backing Plate	2
2	41-347-25	Spider w/out wheel cylinder	2
3	85-411-10	Torsion Spring (Red)	2
4	41-635-00	Brake Shoes(Set of 2)	2
5	85-215-00	Spring	2
6	No Part #	Brake Adjustment Set (includes items #7, and 8)	2
7	41-347-33	Adjusting Screw Nut	2
8	41-347-31	Star Wheel	2
9	41-347-30	Socket	2
10	85-411-15	Torsion Spring (Green)	2

11	41-347-34	Clip, brake shoe retaining
12	41-347-15	Assy, Strut & Lever

41-347-98	Left mechanical drum brakes
41-347-99	Rear mechanical drum brakes

REAR SUSPENSION

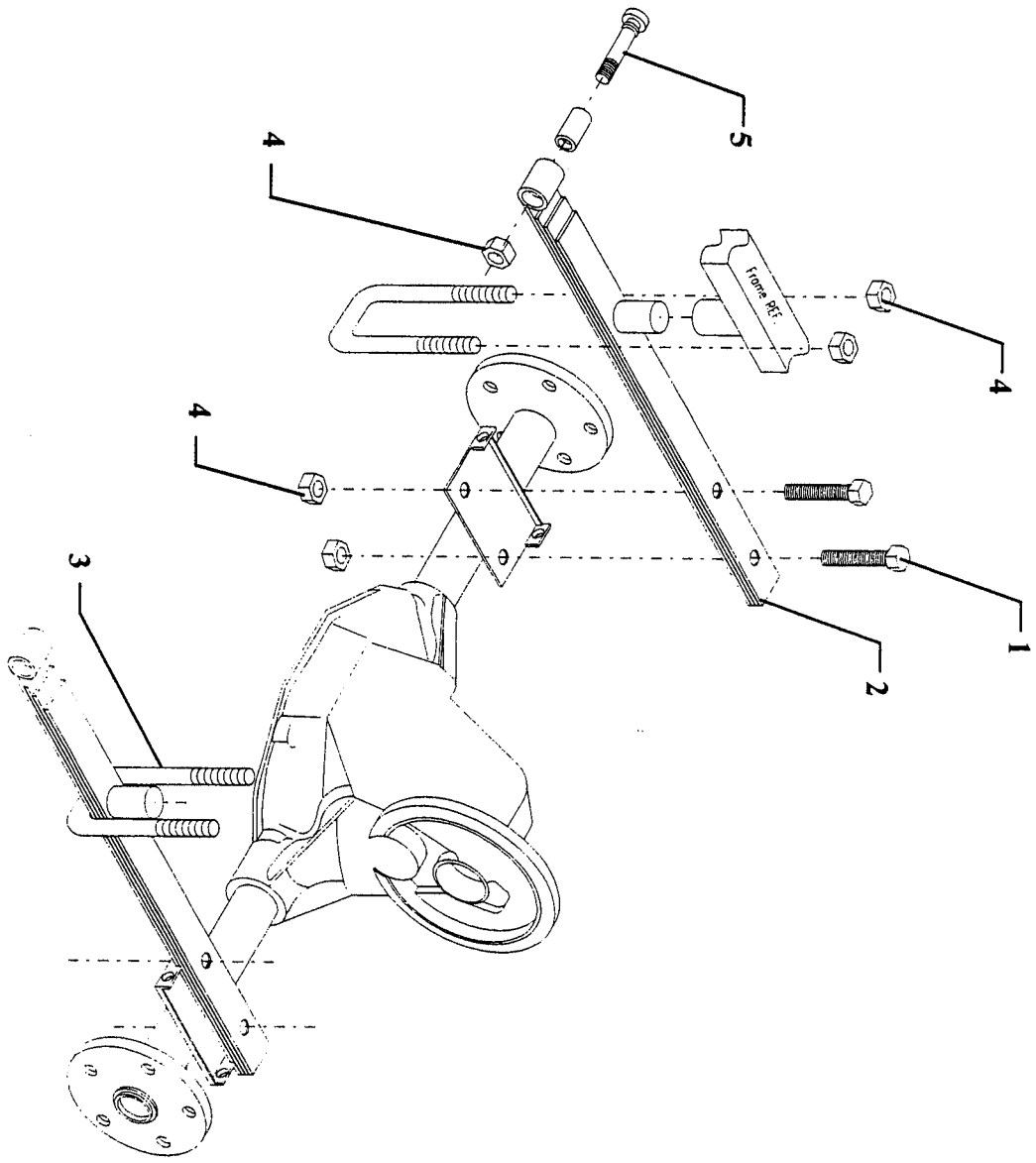

Rear Suspension

Item#	Part#	Description	QTY
1	88-140-17	1/2" X 2-1/2" Hex Head Screw	4
2	85-506-10	Leaf Sprint	2
3	96-118-00	U-Bolt	2
4	88-149-81	1/2" Lock Nut	10
5	96-248-01	Bolt with Grease Fitting	2

INSTRUMENT PANEL

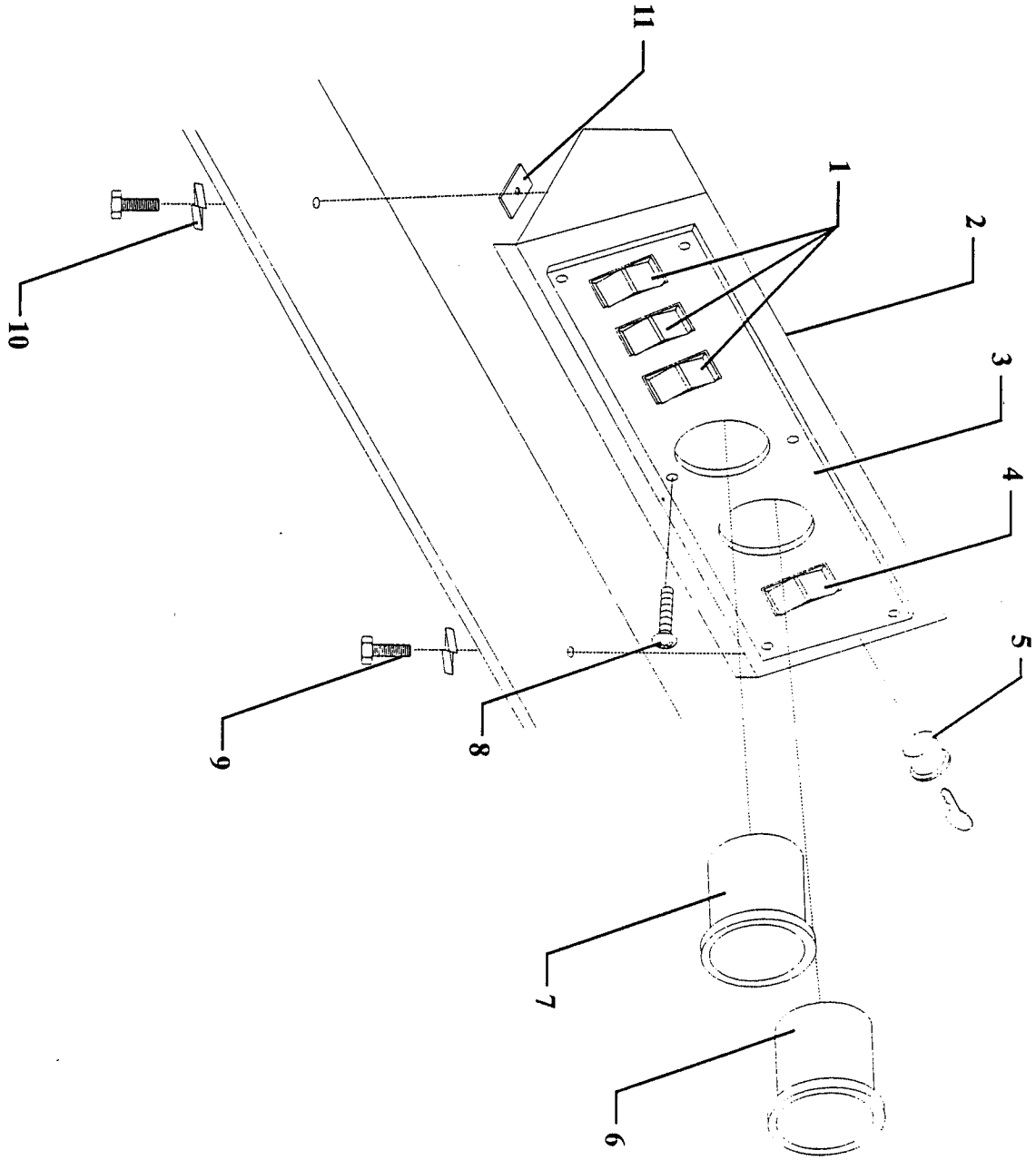

Instrument Panel

Item#	Part#	Description	QTY
1	71-039-10	Rocker Switch	1-3
2	01-200-44	Instrument Panel Console	1
3	94-304-10	Instrument Panel	1
4	71-039-00	Foward/Reverse Switch	1
5	71-120-00	Key Switch	1
6	74-000-00	Hour Meter (Optional)	1
7	74-009-00	Hour/Battery Status Indicator	1
8	88-817-07	#8 X 1/2"" Dash Screw	1
9	88-068-62	1/4"" Lock Washer	2
10	88-065-09	1/4"" X 3/4"" NC Phillips Truss Head	2
11	97-211-20	1/4"" NC U-Nut	2

See page 4-47 for Kits.

FRAME

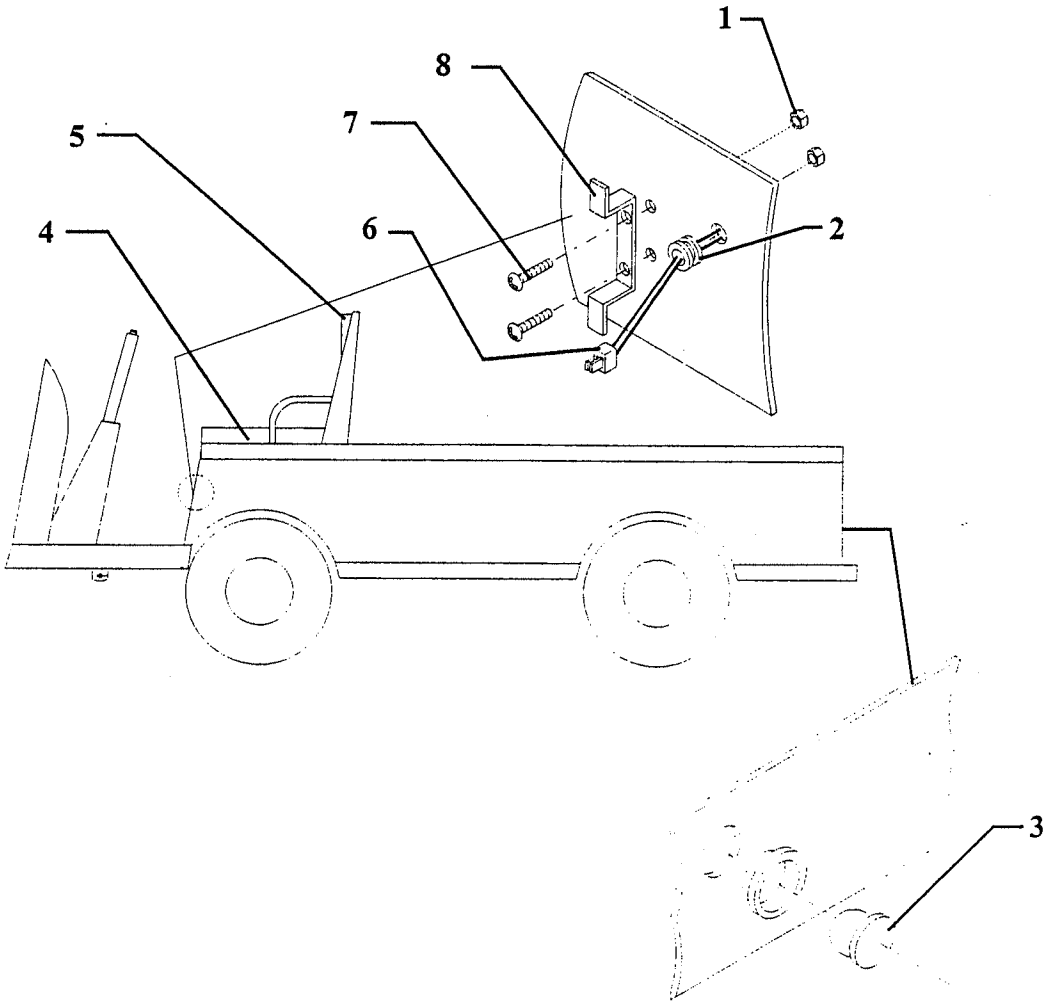

Frame

Item#	Part#	Description	QTY
1	88-069-81	1/4" Nut	1
2	79-530-00	Bushing	2
3	72-022-00	Tail Light with Pigtail	1
4	90-147-00	Seat Cushion	2
5	90-179-00	Seat Back	1
6	79-575-30	Cord	1
7	88-065-06	1/4" X 1/2" Screw	2
8	79-511-00	Cord Holder	1

MOTOR

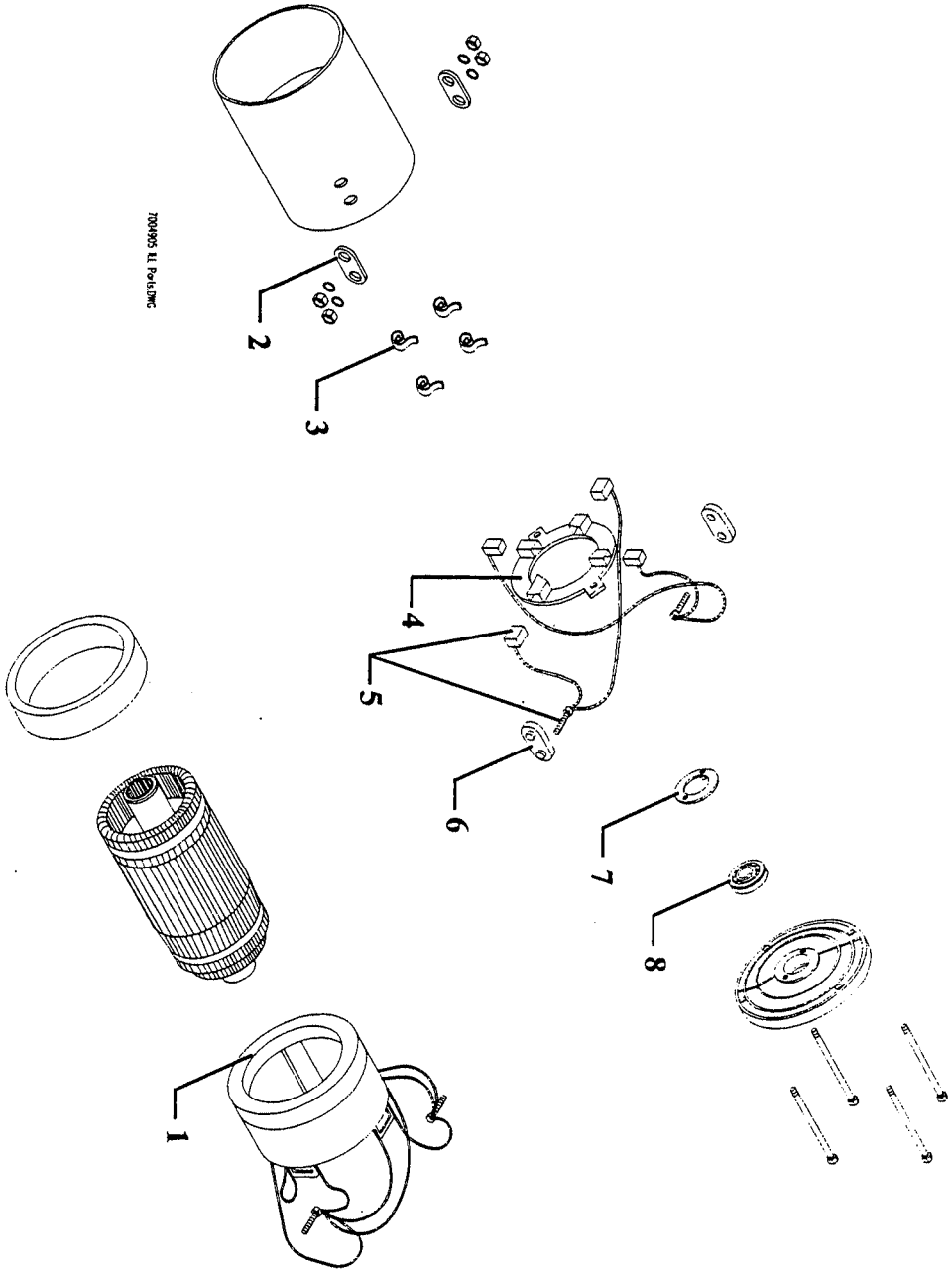

Motor (70-049-05)

Item#	Part#	Description	QTY
1	70-201-15	Stator Assembly and Stator Shell	1
2	70-210-50	Bushing Insulator	2
3	85-410-15	Spring	4
4	70-172-15	Brush Holder with Spring	1
5	70-104-15	Brushes with Termination Screw	2
6	70-210-51	Bushing Insulator	2
7	32-508-15	Bearing Retainer	1
8	80-209-00	Ball Bearing	1

REAR AXLE

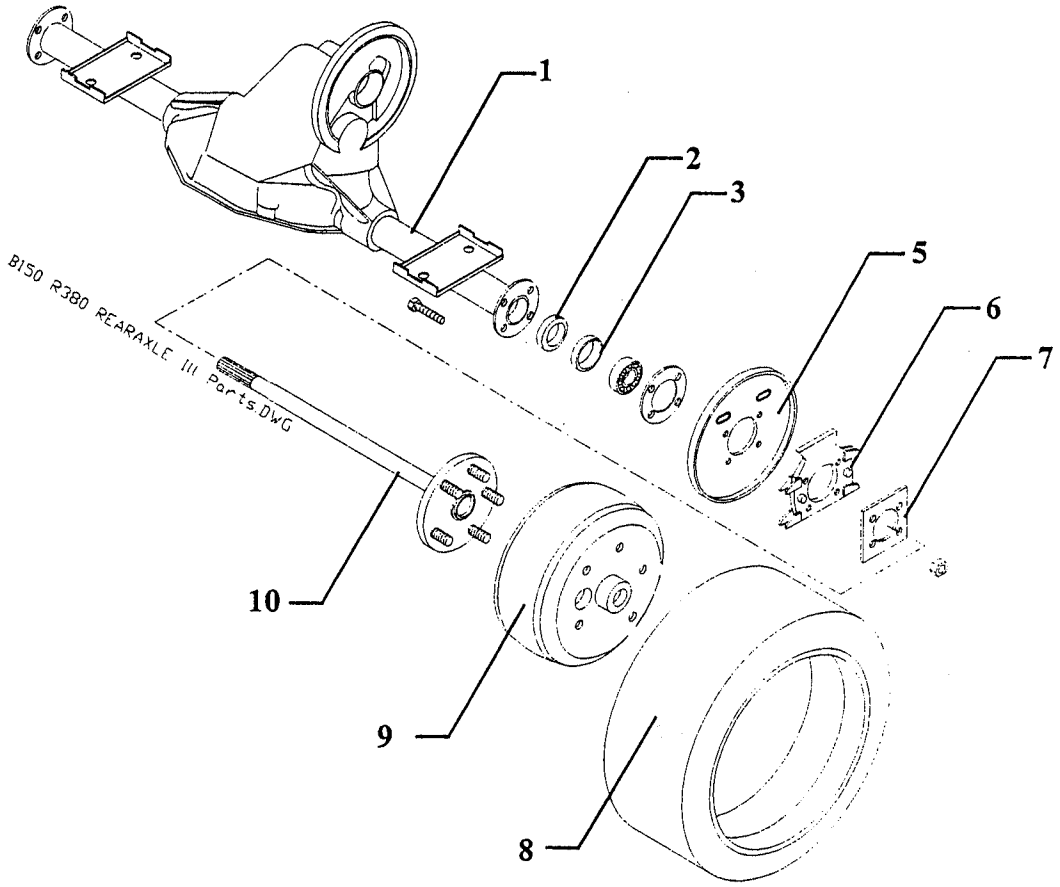

**Complete 4c-150-00 Differential Assembly

Rear Axle

Itme#	Part#	Description	QTY
1	41-280-10	Differential Housing Assembly	1
2	45-303-00	Oil Seal	2
3	32-509-10	Bearing Retainer	2
4	41-347-00	Backing Plate	2
5	41-347-25	Spider w/out wheel cylinder	2
6	45-303-10	Seal	2
7	10-081-00 13-742-00	5.70 X 8 Tire Tire and Wheel Assy	2 2
8	41-516-00	Brake Drum	2
9	41-171-10 41-170-10	Rear Axle Shaft, Right Rear Axle Shaft, Left	1 1

CONTROL PANEL

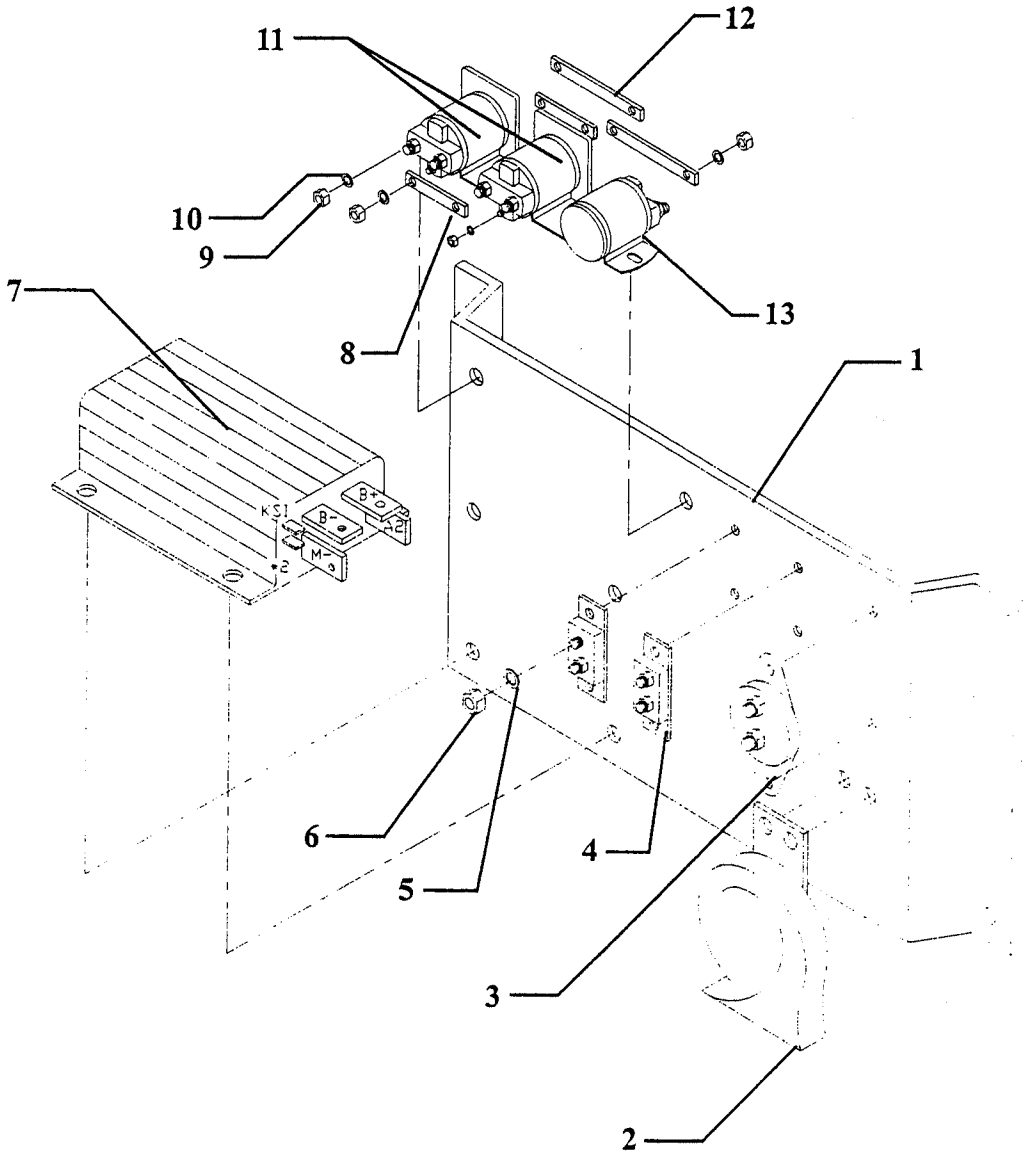

Control Panel (36-Volt System)

Item#	Part#	Description	QTY
1	01-534-80	Mounting Panel	1
2	73-004-20	12-Volt Horn	1
3	79-844-00	Circuit Breaker	1
4	79-840-00	10Amp Circuit Breaker	2
5	88-048-62	#10 Lockwasher	6
6	88-049-80	10-32 Hex Head Nut	6
7	62-204-00	36-Volt, 275-Amp, Controller	1
8	61-838-41	5/8" X 1-1/2" Bus Bar	2
9	88-099-91	5/16" Thin Pattern Hex Head Nut	10
10	88-088-63	5/16" Int. Tooth Lockwasher	10
11	72-501-39	36-Volt, 200-Amp, Solenoid, Forward/Reverse, SPDT	2
12	61-838-42	3/8" X2-5/8" Bus Bar	2
13	72-501-38	36-Volt, 200-Amp, Solenoid, SPST	1
Not Shown	75-148-25	Control Panel Harness	1
	75-149-76	Power Harness	1
	75-148-76	Control Hareness	1
	62-033-00	Accelerator Module Assembly	1

BATTERY

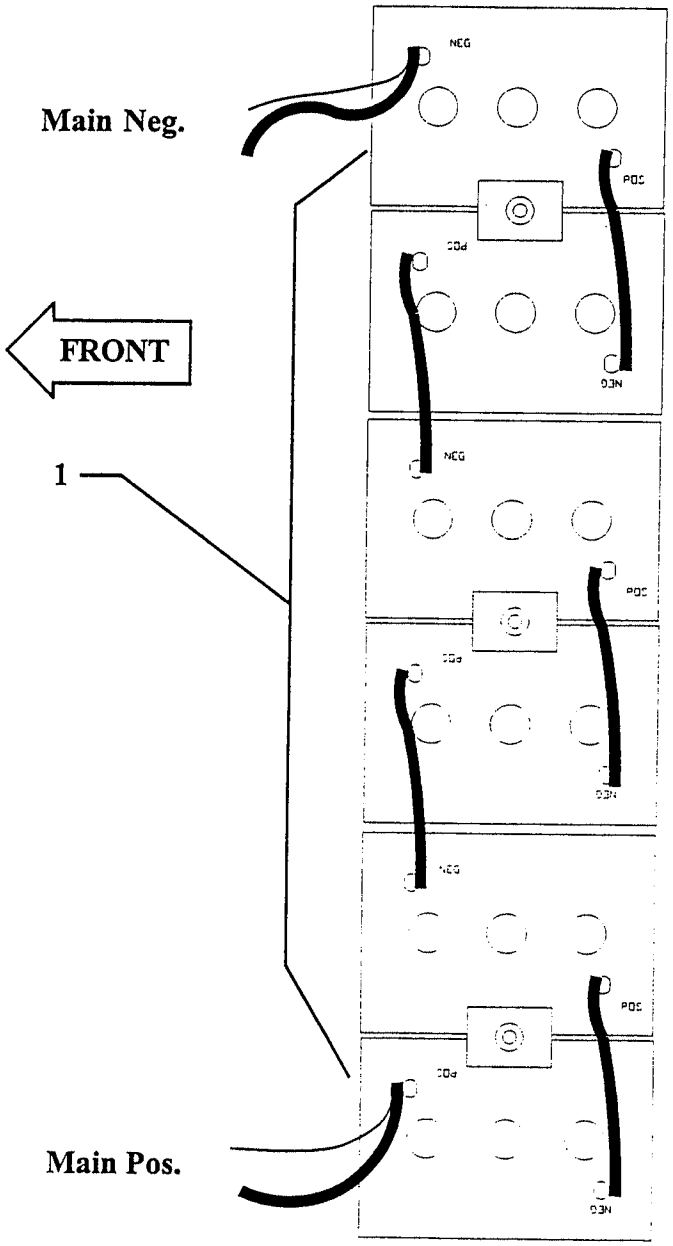

Battery Cell

Item#	Part#	Description	QTY
1	77-042-00	217 Amp Hour, 6Volt, 105 min	6
	77-042-50	217 Amp Hour, 6Volt, 105 min	6
	77-044-00	230 Amp Hour, 6Volt, 125 min(Special Order)	6
	77-047-00	244 Amp Hour, 6Volt, 145 min	6
	77-047-50	250 Amp Hour, 6Volt, 145 min	6
	77-042-80	217 Amp Hour, 6Volt 105 min , Moist Charge	6
	77-047-80	244 Amp Hour, 6Volt, 145 min, Moist Charge	6
Not Shown	50-243-10	Battery Hold Down Rod	3
	50-250-00	Clamp, Battery Lock, Polypropolene	3
	88-069-81	1/4"" NC Nylon Insert Lock Nut	3

BATTERY CHARGERS

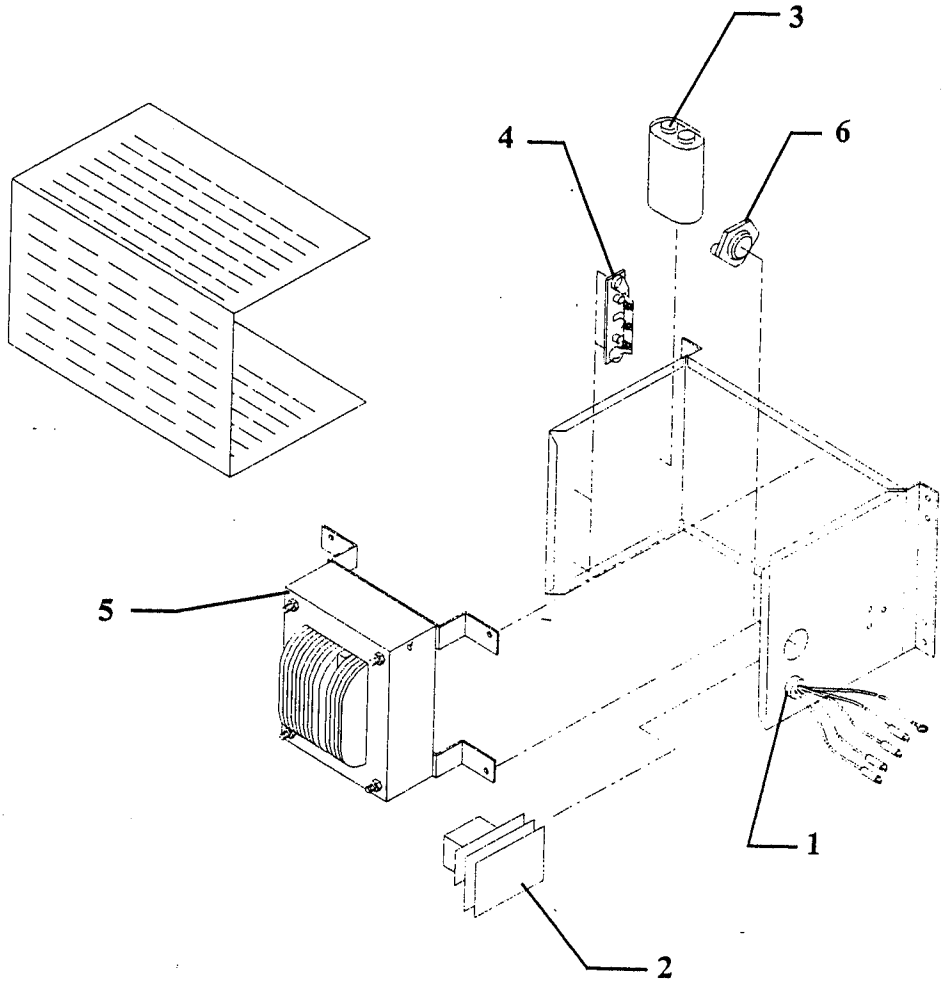

Standard Built-In Charger (Spec #7460)

Item#	Part#	Description	QTY
	79-305-05	Complete Charger, Les2, 36 Volt, 25 Amp, 115/60	1
1	79-530-00	Bushing	1
2	79-805-67	Timer Assembly	1
3	79-902-00	Capacitor	1
4	79-749-13	Diode Asembly	1
5	79-644-31	Transformer	1
6	79-831-00	Fuse, 25 mA	1
Not Shown	79-575-30	AC Cord	1
79-511-00		Cord Holder	1
76-200-00		Replacement Plug	1
OPTIONAL PORTABLE CHARGER (Spec # 7710)			
	79-305-20	Complete Charger, Les2, 36 Volt, 25 Amp, 115/60	1
1	79-530-00	Bushing	1
2	79-805-63	Timer Assembly	1
3	79-902-00	Capacitor	1
4	79-749-13	Diode Asembly	1
5	79-644-27	Transformer	1
6	79-831-00	Fuse, 25 mA	1
Not Shown	79-575-30 76-200-00	AC Cord Replacement Plug	1 1

CAB DOORS

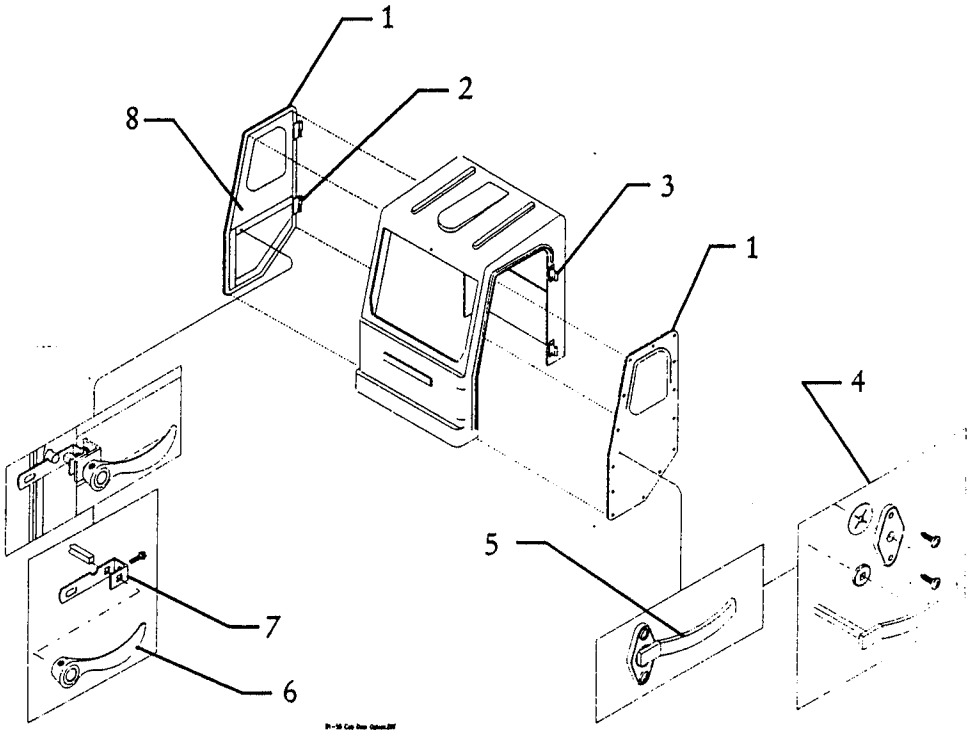

Cab Doors

Item#	Part#	Description	QTY
1	90-923-10	Left Side Door Weldment	1
	90-923-20	Right Side Door Weldment	1
2	91-814-15	Right Side, Male Door Hinge (Mounts on Door Weldment)	2
	91-814-14	Left Side, Male Door Hinge (Mounts on Door Weldment)	2
3	91-814-11	Right Side, Female Door Hinge (Mounts on cab)	2
	91-814-10	Left Side, Female Door Hinge (Mounts on cab)	2
4	97-315-53	Exterior Door Latch Assembly	2
5	97-315-52	Exterior Door Handle	2
6	97-315-54	Interior Door Handle	2
7	97-315-51	Interior Door Latch	2
8	90-924-97	Right Side, Naugahyde for Door (Mounts on Door Weldment)	1
	90-924-96	Left Side, Naugahyde for Door (Mounts on Door Weldment)	1
*Door Kits	90-924-62	Left Side Naugahyde Door Kit (Complete)	1
	90-924-63	Right Side Naugahyde Door Kit (Complete)	1

* Kits come complete with instructions, and hardware.

See page 4-47 for Kits.

HEAD LIGHT & WINDSHIELD WIPER

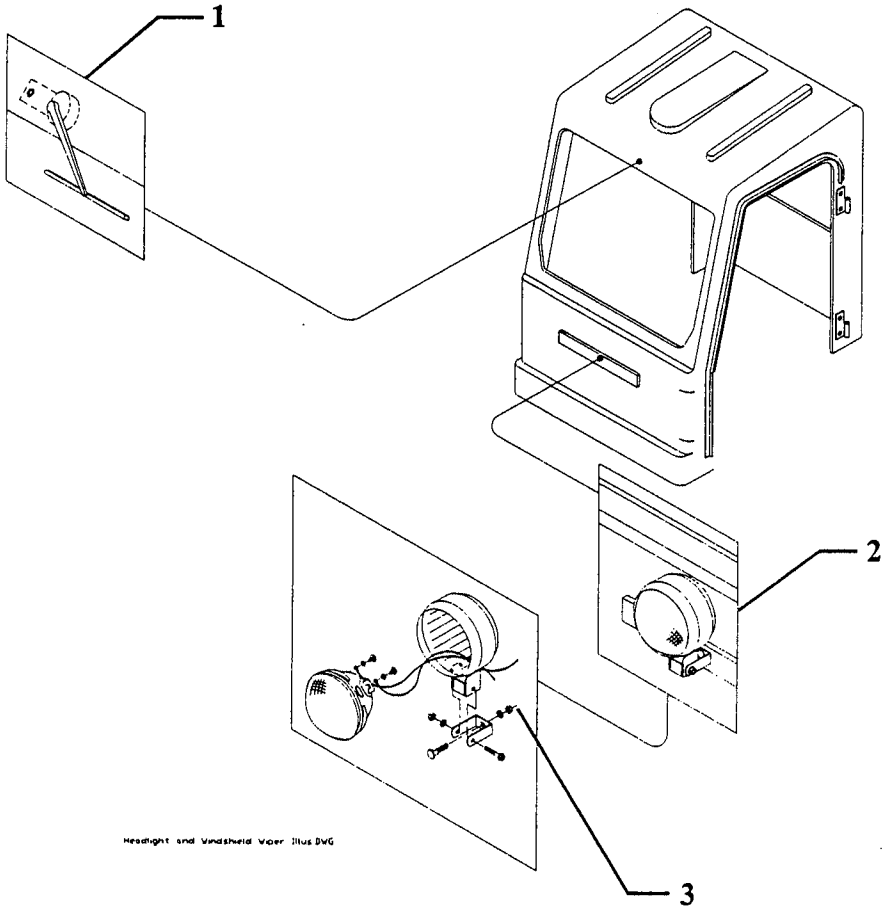

Head Light & Windshield Wiper

Item#	Part#	Description	QTY
1	75-050-00	Wiper Motor, and Hardware	1
	74-052-00	Wiper Blade	1
	74-051-00	Wiper Arm	1
2	72-005-00	Head Light Assembly	1
3	98-603-00	Rubber Grommet, 3/8" ID	1
Not Shown	75-114-20	Windshield Wiper Harness	1
KIT	74-010-62	Windshield Wiper Kit	N/A

See page 4-47 for Kits.

STROBE LIGHT & MIRRORS

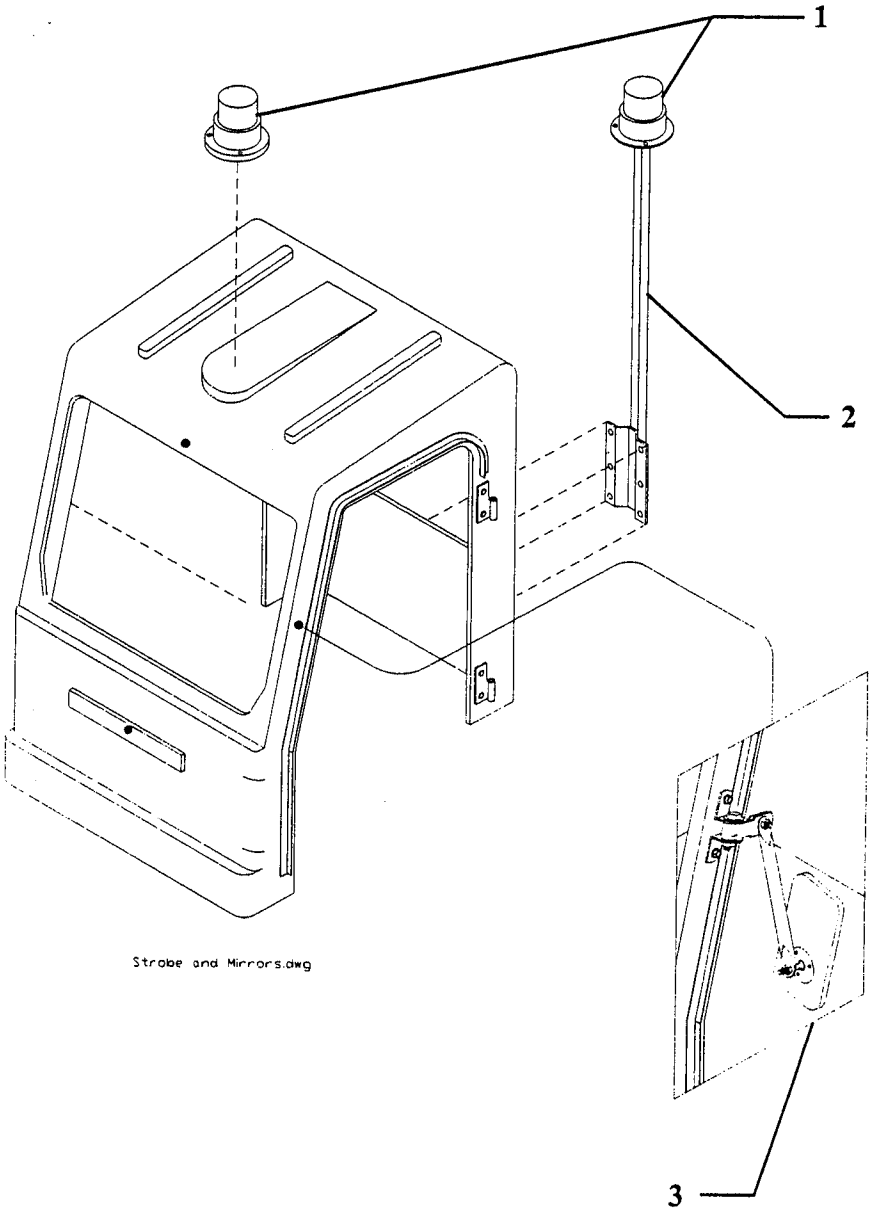

Strobe Light & Mirrors

Item#	Part#	Description	QTY
1	72-203-20	Amber Strobe Light	1
2	72-023-41	Strobe Light Mounting Pole	1
3		Complete Mirror Assembly Parts	
	92-201-00	4-1/2" X 8-1/2" Mirror	2
	88-065-08	1/4" X 5/8" NC Phillips Truss Head Screw	4
	92-202-00	Mirror Bracket (Mounts on Cab)	2
	88-060-06	1/4" X 1/2" NC Hex Head Cap Screw	2
	88-069-81	1/4" Lock Nut	4
Not Shown	75-148-50	Strobe Light Harness	1

See page 4-47 for Kits.

STAKE SIDES

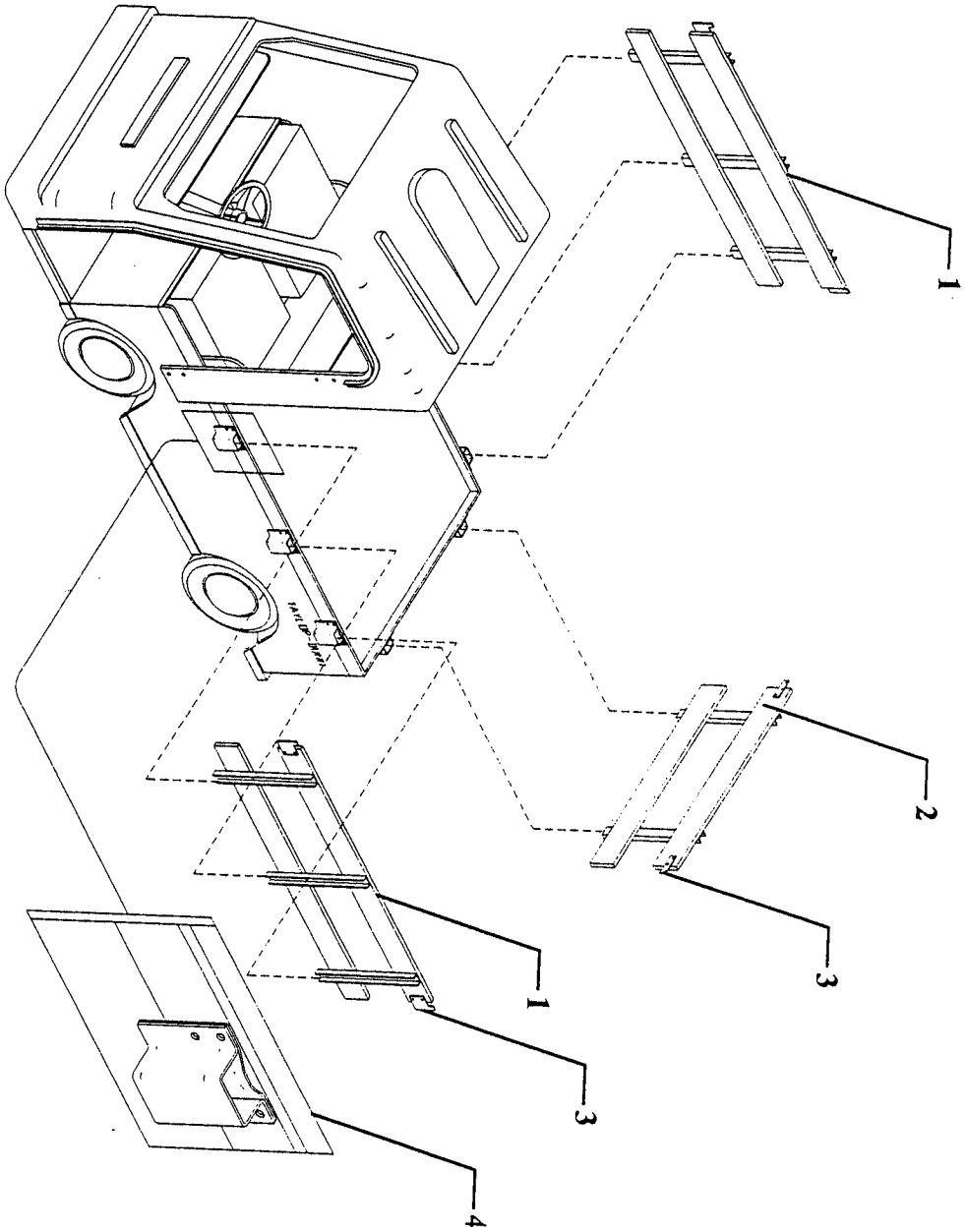

Stake Sides

Item#	Part#	Description	QTY
1	90-542-20	Stake Sides, Right and Left Sides(incld's: hrdwr and gate hooks)	1ea
2	90-542-22	Stake Side, Rear Gate (incld's: hardware and gate hooks)	1
3	90-540-00	Gate Hook	6
4		Bolt On Stake Pocket Parts	1
	90-544-10	Inner Pocket	1
	90-544-00	Outer Pocket	1
	88-065-11	1/4" X 1" NC Phillips Truss Head	4
	88-069-81	1/4" Nylon Insert Locknut	4
Kit	90-542-60	Stake Sides Kit	N/A
	D0-009-86	Instructions	1

See page 4-47 for Kits.

WINDSHIELD & REAR WINDOW

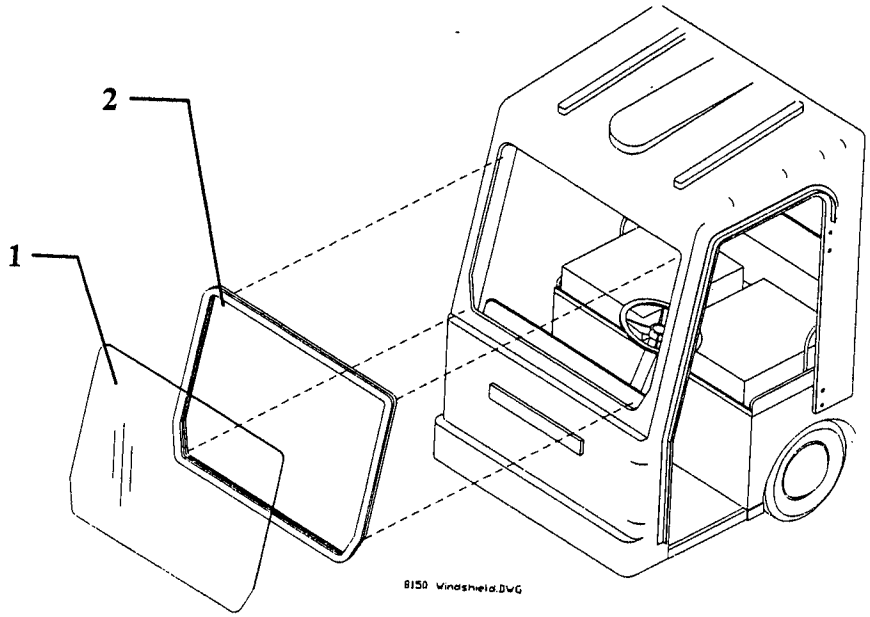

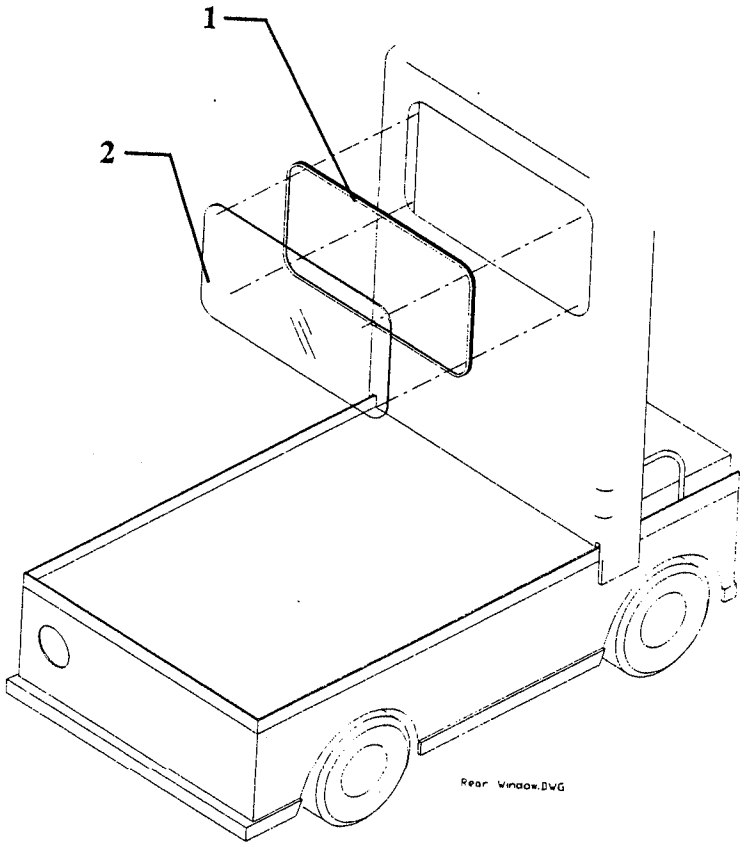

Windshield

Item#	Part#	Description	QTY
1	90-852-30	Winshield	1
2	98-310-10	Rubber Window Channel	Ft
Not Shown	98-310-00	Spray Adhesive	1can

Rear Window

Item#	Part#	Description	QTY
1	90-850-10	Rear Window	1
2	98-310-10	Rubber Window Channel	Ft
Not Shown	98-310-00	Spray Adhesive	1can

CAB

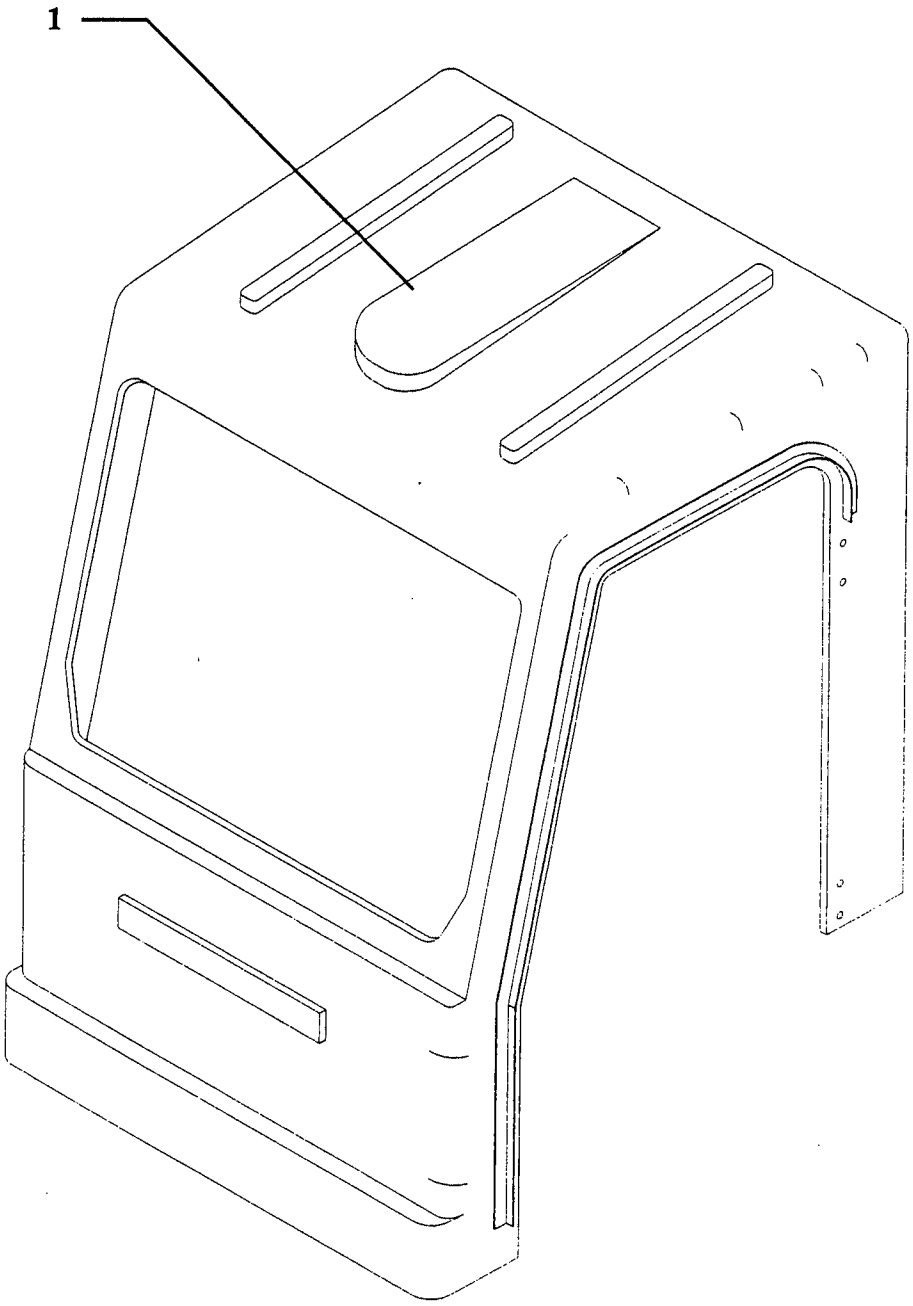

Cab

Item#	Part#	Description	QTY
1	91-008-00	Fiberglass Cab, B1-50	1

See page 4-47 for Kits.

TAIL LIGHT

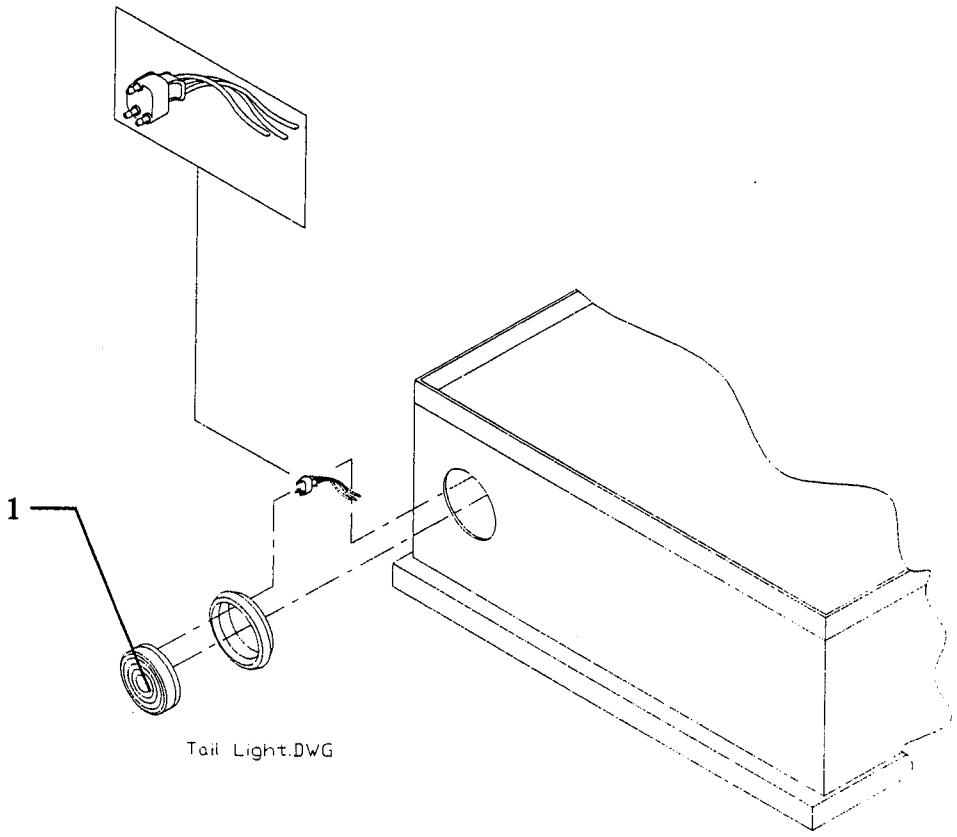

Tail Light

Item#	Part#	Description	QTY
1	72-022-00	4" Round Stop, and Tail Light	1

KITS

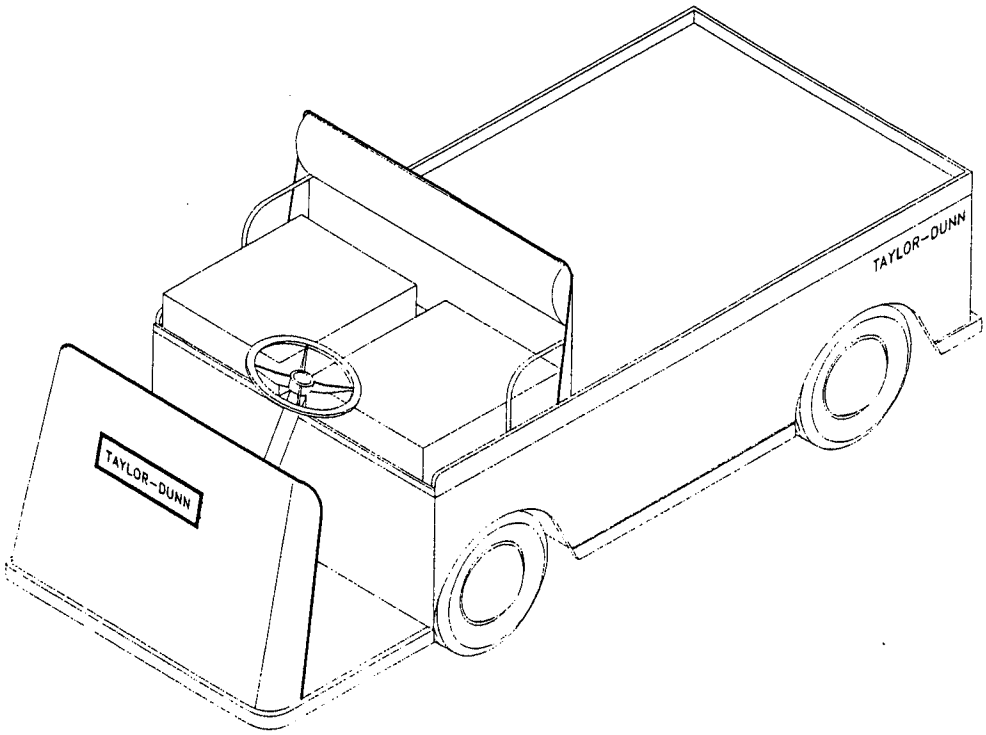

Kits for B 1-50

Item#	Kit#	Description	Instruction Set
1	72-005-65	Headlight and Tailight Kit	D0-009-89
2	72-0023-63	Strobe Light on Pole Kit	D0-009-85
3	72-023-62	Strobe LightCab Mount Kit	D0-010-68
4	72-005-62	Reverse Alarm Kit	D0-009-84
5	73-000-60	Hour Meter Kit	D0-009-82
6	74-009-63	Discharge Indicator Kit	D0-009-83
7	74-010-62	Windshield Wiper Kit	D0-009-93
8	90-924-62	Naugahyde Door, Left Kit	D0-009-92
9	90-924-63	Naugahyde Door, Right Kit	D0-009-95
10	91-008-60	Fiberglass Cab Kit	D0-009-91
11	92-202-61	Left Mirror Kit	D0-009-87
12	92-202-62	Right Mirror Kit	D0-009-88
13	97-804-62	Pintle Hitch Kit	D0-009-80

TAYLOR -DUNN

Appendix

TAYLOR-DUNN®

The Best Way To Go About Your Business

FIGURES FOR KSI TEST

NOTE 1: POSSIBLE SEAT SWITCH CONFIGURATIONS. SOME VEHICLES DO NOT HAVE A SEAT SWITCH.

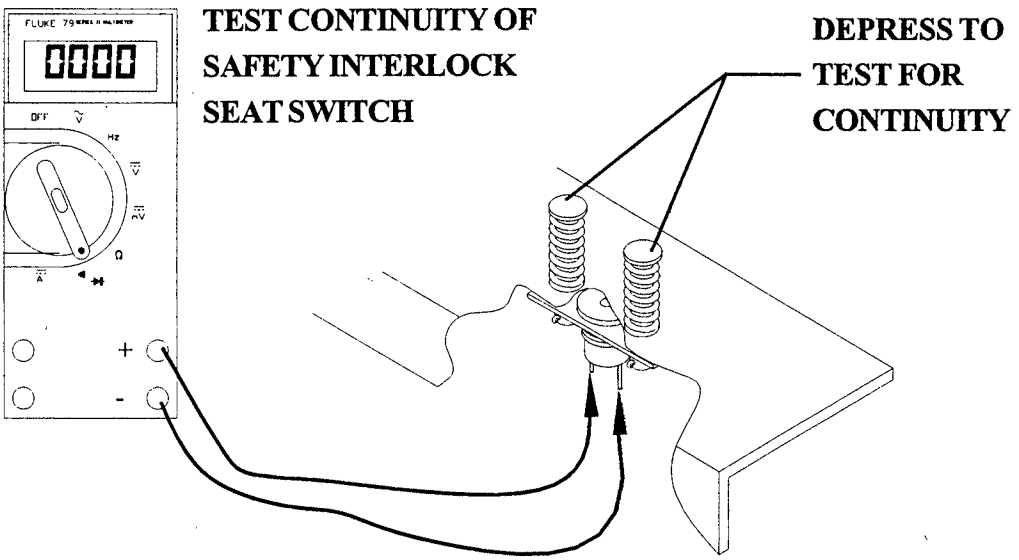

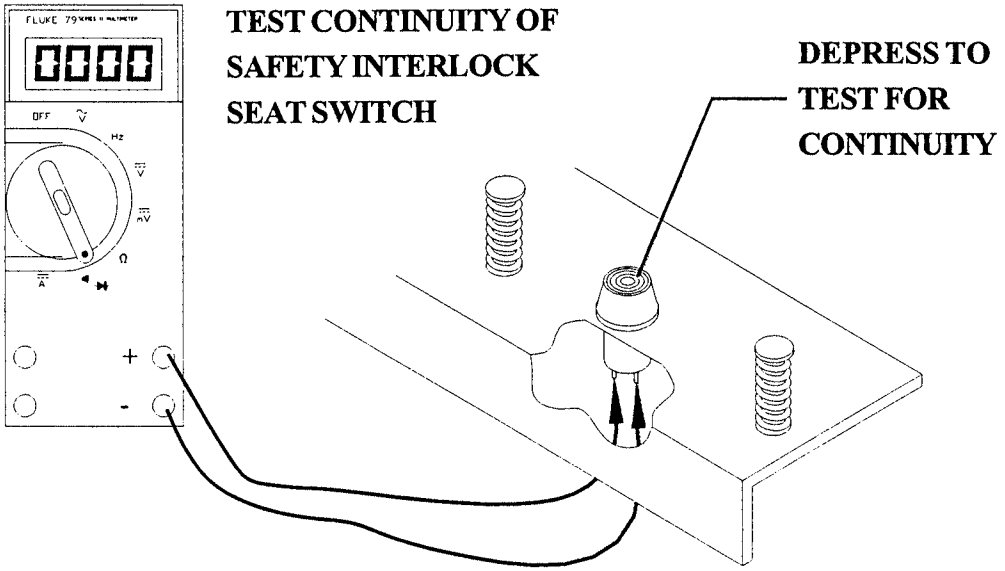

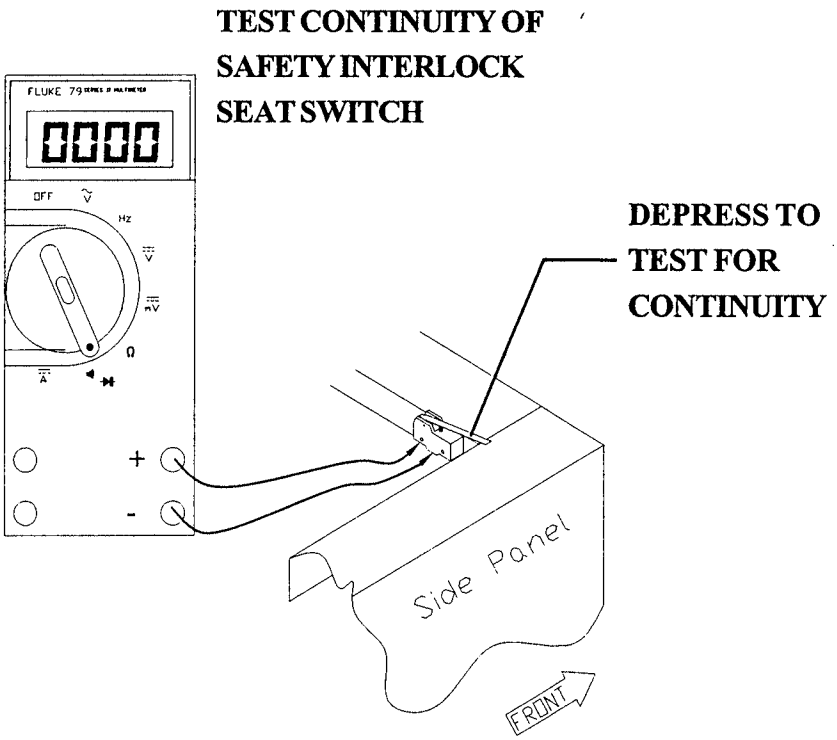
TEST CONTINUITY OF
SAFETY INTERLOCK
SEAT SWITCH
DEPRESS TO
TEST FOR
CONTINUITY
FLUKE 79
OFF
Hz
Ω
+
-
Side Panel
FRONT

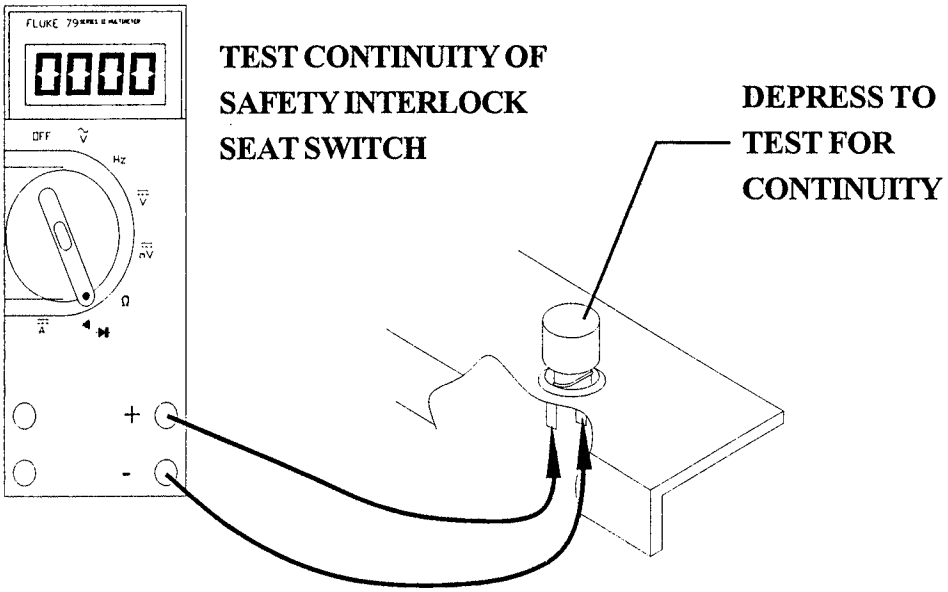
FLUKE 79
OFF
Hz
Ω
+
-
TEST CONTINUITY OF
SAFETY INTERLOCK
SEAT SWITCH
DEPRESS TO
TEST FOR
CONTINUITY

TAYLOR -DUNN®

Index

A

Accelerator Pedal *1-10*
Adjust
  Mechanical Brake Linkage 2-11
  Park Brake 2-19
  Rear Brake Drums 2-14
  Steering Gear
    Endplay 2-27
    Gear Lash 2-27
ANSI for Personnel and Burden Carriers *1-8*
Axle, Front Installation. *See* Installation: Front Axle
Axle, Front Removal. *See* Removal: Front Axle

B

Ball Joints 2-26
Battery, 2-57
  Cleaning *2-57*
  Configuration, 36-Volt *2-59*
  Servicing *2-58*
    Charging *2-58*
  Status Indicator *1-11*
  Storage *2-59*
Brakes
  Adjust Park Brake 2-19
  Disc 2-10
  Mechanical, Replacement 2-12
  Park Brake Handle *1-11*
  Replacing The
    Brake Pedal Linkage 2-13
  Shoe Removal 2-16
Brushes
  Replacing The 2-55

C

Changing the Differential Oil 2-47
Charging. *See Battery*
Cleaning 2-57. *See also Battery*

D

Differential
  Service 2-45
Disc Brakes 2-10
Drive
  Removal 2-48
Drive Motor 2-55
  Disassembly 2-55
  Inspecting Armature 2-56
  Replacing Brushes 2-55
Driver Qualifications. *1-9*
DRIVER TRAINING PROGRAM *1-9*
Driving *1-12*

E

Electrical Troubleshooting 3-1
  ACCELERATOR MODULE (magnetic or solid state only) 3-9
  CONTROL WIRES AT PMC 3-5
  FORWARD CONTACTS 3-23
  KSI 3-14
  MOTOR 3-26
  PLUGGING DIODE 3-30
  PMC CONTROL 3-28
  PMC TROUBLESHOOTING 3-3
  POWER WIRING 3-6
  SOLENOIDS 3-16
  SPECIAL TROUBLESHOOTING 3-24
Electrolyte Level *2-58*
Endplay 2-27

F

Forward-Reverse Switch *1-10*
Front Axle and Steering 2-20
Front End
  Aligning 2-22

G

Gear Lash 2-27

H

Horn Button *1-11*
Hour Meter *1-11*

I

Illustrated Parts List Figures
  B2-48 Rear Suspension 4-16
  Control Panel 4-26
  Drag Link 4-10
  Frame 4-20
  Instrument Panel 4-18
  Motors 4-22
  Park Brake Linkage 4-12
  Rear Axle B2-48 4-24
  Standard Rear Brakes (B2-48) 4-14
Inspecting
  the Armature 2-56
Installation
  Front Axle 2-20
Instrument Panel *1-11*

K
Key-Switch *1-10*

L
Loading and Unloading *1-12*
LUBRICATION CHART 2-6

M
Maintenance and Service Procedures 2-1
Maintenance Guidelines 2-2
Maximum Incline *1-8*
Motor
  Disassembly *2-55*

O
Operator Training Program. *See DRIVER TRAINING PROGRAM*
Operators Abilities. *See Driver Qualifications.*
Owner Resposibility *1-8*

P
Park Brake Lever *1-11*
Parking *1-12*

R
Removal
  Front Axle 2-20
  Rear Axle 2-44
  The Complete Drive Assembly 2-48
Replacing the
  Brake Pedal 2-13
  Brushes 2-55
Responsiblity, Owner *1-8*

S
Safety *1-8*
Safety Rules and Guidelines *1-8*
Servicing
  The Differential 2-45
  The Rear Axle 2-44
Steering *1-11*
  Gear Adjusment
    Endplay 2-27
    Gear Lash 2-27
  Yoke/Bushings 2-24
Steering Gear Adjustment 2-27
Steering Yoke/Bushings 2-24
Storing and Returning to Service *1-13*
Switch
  Forward-Reverse Switch *1-10*
  Key Switch *1-10*
  Seat Interlock Switch *1-10*

T
Towing *1-12*
TROUBLESHOOTING GUIDE 2-7

U
Unloading *1-12. See also Loading and Unloading*

V
VEHICLE CONTROLS *1-10*

W
Wheel Bearings 2-25, 2-26

MANUAL REVISION LIST			
Model: B1-50			
Revision Date	Version Number/ Rev. Letter	Description	Revised By
7/99	01/A	Original Release: New Manual writen to include part changes, correct errors from previous manual, optional parts and new format.	CAM

TAYLOR-DUNN