TAYLOR-DUNN®

The Best Way To Go About Your Business

Models Inlcuded:
B4-K45F (B4-K45) Kalamazoo Speed Truck
B4-K60F (B4-K60) Kalamazoo Speed Truck

MANUAL MB4-K4560-01

Operation, Troubleshooting and Replacement Parts Manual

Revision: A

Serial Number Starting: 162260

TAYLOR-DUNN SERVICE CENTER

For more information about this and other Taylor-Dunn® manuals, please write Taylor-Dunn®:

Taylor-Dunn® Mfg.
2114 W. Ball Road
Anaheim, CA 92804
(Attn: Technical Writer)

Contents

Table of Contents

Introduction

Contents

ABOUT THIS MANUAL

The purchase of this vehicle shows a belief in high quality products manufactured in the USA. Taylor-Dunn®, a leading manufacturer of electric burden and personnel carriers since 1949, wants to be sure this vehicle provides years of reliable service. Please continue to read this manual and enjoy this high quality Taylor-Dunn® vehicle.

This manual is to serve as a guide for the service, repair, and operation of Taylor-Dunn® vehicles and is not intended as a training guide. Taylor-Dunn® has made every effort to include as much information as possible about the operation and maintenance of this vehicle.

Included in this manual are:

- Vehicle Description
- Safety Rules and Guidelines
- Operational Information
- Operator Responsibilities
- Owner Responsibilities
- Control Operation and Location Information
- Maintenance and Troubleshooting Information
- Standard Parts List

Before servicing, operating, training or performing maintenance on this or any other Taylor-Dunn® vehicle, read the appropriate Taylor-Dunn® manual.

Each Taylor-Dunn® manual references the applicable models and serial numbers on the front cover.

Please, be aware of all cautions, warnings, instructions, and notes contained in this manual.

WHO SHOULD READ THIS MANUAL

This manual is intended for use by anyone who is going to operate, own, perform maintenance on, service, or order parts for this Taylor-Dunn® vehicle. Each person should be familiar with the parts of this manual that apply to their use of this vehicle.

RESPONSIBILITIES

Of the Owner...

The owner of this or any Taylor-Dunn® vehicle is responsible for the overall maintenance and repairs of the vehicle, as well as the training of operators. Owners should keep a record of conducted training and maintenance performed on the vehicle. (OSHA Regulation, 29 CFR 1910.178 Powered Industrial Truck Operator Training).

Of the Operator...

The operator is responsible for the safe operation of the vehicle, preoperational and operational checks on the vehicle, and the reporting of any problems to service and repair personnel.

Of the Service Personnel...

The service personnel are responsible for the service and maintenance of the vehicle. At no time should a service person allow any untrained personnel to service or repair this or any Taylor-Dunn® vehicle. For the purposes of training, a qualified service person may oversee the repairs or services being made to a vehicle by an individual in training. At no time should an untrained individual be allowed to service or repair a vehicle without supervision. This manual is not a training guide.

Of the Passengers ...

The passengers are responsible to remain fully seated, keeping their hands, arms, and legs inside the vehicle at all times. Each passenger should be fully aware of the vehicle's operation. All forms of recklessness are to be avoided. Do not engage in horseplay.

HOW TO USE THIS MANUAL

This manual is organized into four main sections:

INTRODUCTION

This section describes how to use this service manual and how to identify your vehicle.

Safety Rules and Operating Instructions

This section outlines the safety and operational issues, location and operation of controls, and the operational checks that are to be performed on this vehicle. It also includes various subjects that should be included in the operator and service training program.

Maintenance Service and Repair

This section gives specific information on the servicing of the vehicle and a schedule for maintenance checks.

Illustrated Parts

This section provides an illustrated view of various assemblies. The illustrations are accompanied by tables identifying the parts.

Conventions

Symbols and/or words that are used to define warnings, cautions, instructions, or notes found throughout this manual:

⚠WARNING

or,

⚠WARNING

A shaded box with the word "Warning" on its left denotes a warning. A warning alerts the reader of a hazard that may result in injury to themselves or others. Be sure to follow any instructions contained within a warning and exercise extreme care while performing the task.

⚠CAUTION

The symbol at the left and the bold text contained within a box denotes a "Caution" and is used to inform the reader that property damage may occur. Be sure to exercise special care and follow any instructions contained with in a caution.

NOTE: Alerts the reader to additional information about a subject.

HOW TO IDENTIFY YOUR VEHICLE

This manual applies to vehicles with the same model and serial numbers listed on the front cover.

These vehicles are designed for driving on smooth surfaces in and around facilities such as industrial plants, nurseries, institutions, motels, mobile home parks, and resorts. They are not to be driven on public highways.

⚠WARNING

This vehicle is not designed to be driven on public roads or highways. It is available in maximum designed speed of 24 mph. Do not exceed the maximum designed speed. Exceeding the maximum designed speed may result in steering difficulty, motor damage, and/or loss of control. Do not exceed locally imposed speed limits. Do not tow this vehicle at more than 5 mph.

This vehicle conforms to requirements for Type G vehicles as described in O.S.H.A. Standard Section 1910.178 (Powered Industrial Trucks) and with all applicable portions of the American National Standard for Personnel and Burden Carriers (ANSI B56.8).

The locations of the model and serial numbers are illustrated below:

Data Plate

Frame stamp on rear deck support in front of the fuel tank

TAKING DELIVERY OF YOUR VEHICLE

Inspect the vehicle immediately after delivery. Use the following guidelines to help identify any obvious problems:

- Examine the contents of all packages and accessories that may have come in separate packages with the vehicle.
- Make sure everything listed on the packing slip is there.
- Check that all wire connections, battery cables, and other electrical connections are secure.
- Check battery cells to be sure they are filled.
- Check the tire pressure, tightness of lug nuts, and for any signs of damage.

Check the operation of each of the following controls:

- Accelerator
- Brake
- Parking Brake
- Ignition Switch
- Shift Lever
- Reverse Alarm (if equipped)
- Headlight Switch
- Steering Wheel
- Horn

What To Do If a Problem is Found

If there is a problem or damage as a result of shipping, note the damage or problem on the bill of lading and file a claim with the freight carrier. The claim must be filed within 48 hours of receiving the vehicle and its accessories. Also, notify your Taylor-Dunn® dealer of the claim.

If there is a problem with the operation of the vehicle, DO NOT OPERATE THE VEHICLE. Immediately contact your local Taylor-Dunn® distributor and report the problem. The report must be made within 24 hours of receiving the vehicle and its accessories.

The only personnel authorized to repair, modify, or adjust any part of this or any Taylor-Dunn® vehicle is a factory authorized service technician.

⚠WARNING

The only personnel authorized to repair, modify, or adjust any part of this or any Taylor-Dunn® vehicle is a factory authorized service technician. Repairs made by unauthorized personnel may result in damage to the vehicles systems which could lead to an unsafe condition resulting in severe bodily injury and/or property damage. Unauthorized repairs may also void the vehicles warranty.

Safety Rules and Operating Instructions

TABLE OF CONTENTS

STANDARD SPECIFICATIONS BURDEN CARRIER (CHASSIS ONLY)*

ITEM	MODEL	SPECIFICATION
Occupancy		Driver only
Dimensions		409 L X 152.5 W X 139.7 H Centimeters 161 L X 60 X 55 H Inches
Turning Radius		508 Centimeters (200 Inches)
Dry Weight		1,474 kg (3,250 lbs)
Maximum Load Deck dimensions	K 60 K 45	2,721 kg (6,000 lbs) 1,814 kg (4,000 lbs) 152 W 274 L Centimeters (60 W x 108 L Inches)
Engine	LRG-425 EFI	2.5 Liter, 4 cylinder, 82 hp@3600 RPM
Transmission	A4LD	3-Speed Hydraulic Automatic Transmission
Brakes		Rear Wheel Hydraulic Drum, Hand Operated Park Brake Front Wheel Hydraulic Disc
Steering		Automotive Steering 24:1
Tires	K45 / K60 K60	Front - 6.50 x 10 Load Range E, 115 PSI Rear - 28 x 9-15 Load range F, 120 PSI
Frame		Heavy Duty Steel Channel Frame with Diamond Plate Steel Deck
Instrumentation		Oil Pressure Gauge, Fuel Gauge, Engine Water Temperature Gauge, Battery Voltage Gauge, Hour Meter
Light Accessories		Headlights, Tail/Brake Lights, Turn Signals

**Refer to the engine manual for information regarding engine specifications.*

This vehicle conforms to requirements for Type G vehicles as described in O.S.H.A. Standard Section 1910.178 (Powered Industrial Trucks) and with all applicable portions of the American National Standard for Personnel and Burden Carriers (ANSI B56.8).

SAFETY RULES AND GUIDELINES

It is the responsibility of the owner of this vehicle to assure that the operator understands the various controls and operating characteristics of this vehicle (extracted from the American National Standards Institute Personnel and Burden Carriers ANSI B56.8). As well as, following the safety rules and guidelines outlined in ANSI B56.8 and listed below.

These vehicles are designed for driving on smooth surfaces in and around facilities such as industrial plants, nurseries, institutions, motels, mobile home parks, and resorts. They are not to be driven on public highways.

⚠WARNING

This vehicle is not designed to be driven on public roads or highways. It is available in maximum designed speed of 25 mph. Do not exceed the maximum designed speed. Exceeding the maximum designed speed may result in steering difficulty, motor damage, and/or loss of control. Do not exceed locally imposed speed limits. Do not tow this vehicle at more than 5 mph.

⚠WARNING

Read and follow all of the guidelines listed below. Failure to follow these guidelines may result in severe bodily injury and/or property damage.

- Do not drive this vehicle unless you are a qualified and trained operator.
- Keep all body parts (head, arms', legs') inside the vehicle while it is moving.
- Drive slowly when making a turn especially if the ground is wet or slippery.
- Drive slowly when driving on an incline.
- This vehicle may overturn easily if turned sharply while driven at high speeds, or on an incline.
- Drive only on level surfaces or on surfaces having an incline of no more than 10% (5.6 degrees).
- Do not drive over loose objects, holes, or bumps.
- Observe all traffic regulations and speed limits (see speed warning above).
- Keep to the right under normal conditions.
- Maintain a safe distance from all objects.
- Keep the vehicle under control at all times.
- Yield right of way to pedestrians, ambulances, fire trucks, or other vehicles in emergencies.
- Do not overtake another vehicle at intersections, blind spots, or other dangerous locations.
- Keep a clear view ahead at all times.

⚠WARNING

1. Make sure the ignition switch is "OFF", then remove the key.
2. Place the shift lever in park.
3. Set the park brake.
4. Place blocks under the front wheels to prevent vehicle movement.
5. Disconnect the negative ground cable from the battery.

DRIVER TRAINING PROGRAM

According to ANSI B56.8, the owner of this vehicle shall conduct an Operator Training program for all those who will be operating this vehicle. The training program shall not be condensed for those claiming to have previous vehicle operation experience. Successful completion of the Operator Training program shall be required for all personnel who operate this vehicle.

The Operator Training program shall include the following:

- Operation of this vehicle under circumstances normally associated with your particular environment.
- Emphasis on the safety of cargo and personnel.
- All safety rules contained within this manual.
- Proper operation of all vehicle controls.
- A vehicle operation and driving test.

Driver Qualifications.

Only those who have successfully completed the Operator Training program are authorized to drive this vehicle. Operators must possess the visual, auditory, physical, and mental ability to safely operate this vehicle as specified in the American National Standards Institute Controlled Personnel and Burden Carriers ANSI B56.8.

The following are minimum requirements necessary to qualify as an operator of this vehicle:

- Demonstrate a working knowledge of each control.
- Understand all safety rules and guidelines as presented in this manual.
- Know how to properly load and unload cargo.
- Know how to properly park this vehicle.
- Recognize an improperly maintained vehicle.
- Demonstrate ability to handle this vehicle in all conditions.

VEHICLE CONTROLS

Ignition Switch

The ignition switch is located on the dash, below the right side of the instrument panel. Refer to ***Starting*** in this section for instructions for this switch.

The ignition switch should be in the “OFF” position whenever the operator leaves the vehicle.

This switch is also designed to secure and disable the vehicle. The key can only be removed when the ignition switch is in the “OFF” position.

Shift lever

The shift lever has 6-positions:

(P) PARK - When selected, the transmission is in neutral with the output shaft locked preventing the vehicle from rolling. The engine can only be started when PARK or NEUTRAL is selected.

(R) REVERSE - When selected, enables the vehicle to operate in a rearward direction.

NOTE: There is no engine braking while in REVERSE.

(N) NEUTRAL - When selected, the transmission is in NEUTRAL and the output shaft is not locked. The engine can only be started when PARK or NEUTRAL is selected.

(D1) DRIVE - When selected, provides all automatic shifts with no engine braking.

(D2) DRIVE - When selected, provides all automatic shifts with engine braking enabled in first, second and third gears.

(2) SECOND - When selected, locks the transmission in second gear. Primarily used when starting in slippery conditions or to provide additional engine braking on downgrades.

(1) MANUAL LOW - When selected at start-up or lower speeds, locks the transmission in first gear. When selected at higher speeds, results in downshift to second gear and when vehicle slows, will downshift and lock the transmission in first gear.

⚠CAUTION

Do not change directions or place the shift lever in park until the vehicle is stopped. Changing directions or selecting park while the vehicle is in motion may damage the transmission.

Steering

The steering wheel and steering system are similar to an automobile. To turn right, turn the steering wheel clockwise. To turn left, turn the steering wheel counter-clockwise.

Horn Switch

The horn switch is located in the center of the steering wheel. Depress the switch to sound the horn, release it to turn it off.

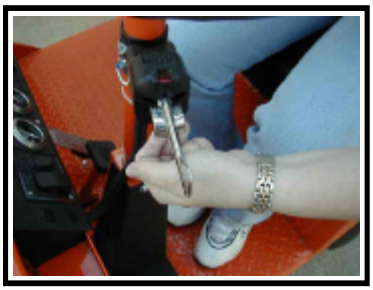

Hazard Light Switch

The hazard light switch is located on the left side of the steering column. The switch is a small tab. To activate the hazard lights, pull the tab out. To turn the hazard lights off, push forward or pull back the directional signal lever.

Directional Signals

The turn signal lever is located on the left side of the steering column. Push the lever forward to activate the right turn signal and pull the lever back to activate the left turn signal.

Accelerator Pedal

The accelerator pedal is located to the right of the brake pedal. It controls the speed of the vehicle and operates similar to the accelerator pedal in an automobile. Depress the pedal to increase speed and release the pedal to decrease speed.

Foot Brake Pedal

The foot brake pedal, is located to the right of the steering column, it is for operation with the right foot only. It works similar to the brake in an automobile. Applying pressure to the brake pedal slows the vehicle according to the amount of pressure applied. Relieving pressure from the pedal releases the braking action.

Park Brake

The parking brake is actuated with a hand lever, which is located to the right of the driver. To set the parking brake, push down on the brake pedal and pull the lever up until it locks. To release the park brake, depress the foot brake pedal and push the lever all of the way down.

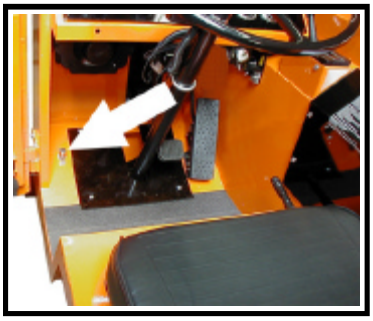

Headlight High Beams

A foot operated switch on the floorboard turns the high beams ON or OFF. Depressing and releasing the switch toggles the high beam ON or OFF.

INSTRUMENT PANEL LAYOUT

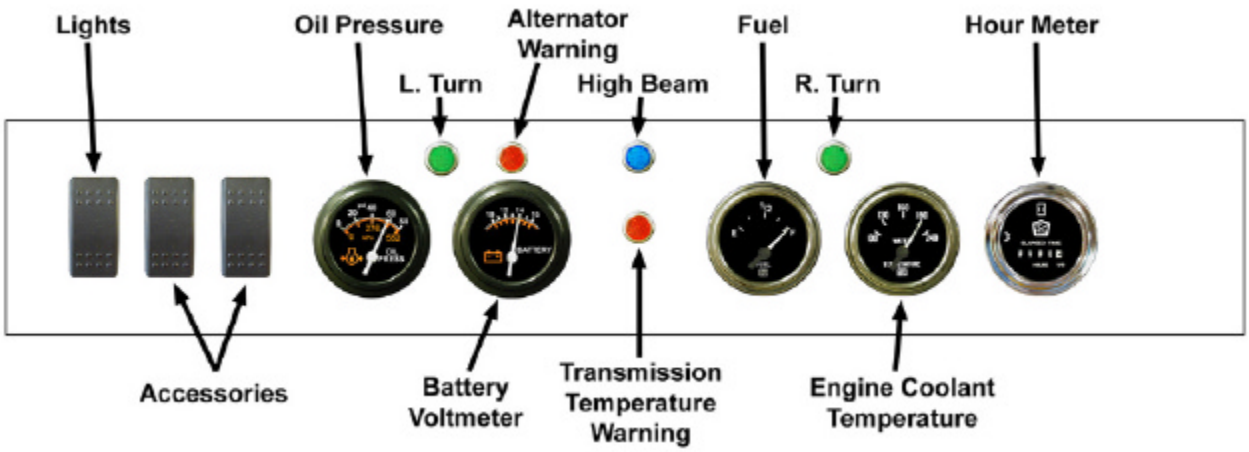

Headlight Switch

The headlight switch is located on the left side of the instrument panel. Push the top of the switch to turn the lights on. Push the bottom of the switch to turn the lights off.

Accessory Switches (Optional)

The accessory switches are located on the left side of the instrument panel and to the right of the headlight switch. Push the top of the switch to turn on the accessory. Push the bottom of switch to turn off the accessory. The accessory can be turned “ON” with the key switch in the “OFF” position. The accessories controlled by these switches depend on what options are installed on the vehicle.

Hour Meter

The hour meter is located on the right side of the instrument panel. It records the number of hours the vehicle has been in operation.

Fuel Gauge

The fuel gauge is located just right of the center of the instrument panel. It indicates the relative amount of fuel in the fuel tank. When the tank is full, the needle will register towards the “F”, as the fuel is consumed the needle will move towards the “E”. When the needle is close to, or pointing at the “E”, then it indicates that the fuel tank is empty.

Oil Pressure Gauge

The oil pressure gauge is located on the left side of the instrument panel. This gauge displays the engine oil pressure. At running speeds, the oil pressure should be approximately 60 PSI. If the pressure is more or less than 60 PSI, then it may indicate a problem with the engine lubrication system. The vehicle should be removed from service and inspected.

Battery Voltmeter

The battery voltmeter is located just left of the center of the instrument panel. This meter displays the battery voltage. When the engine is running, the meter should indicate approximately 14 volts. If the meter indicates more or less than 14 volts, the vehicle should be removed from service and inspected.

Engine Coolant Temperature

The water temperature gauge is located on the right side of the instrument panel between the hour meter and the fuel gauge. This gauge displays the current temperature of the engine coolant. Normal operating temperature is approximately 180-205º(F).

If the temperature does not reach 180º, then it could be an indication of a defective engine thermostat, the vehicle should be removed from service and inspected.

If the temperature exceeds 210º, then it could be an indication of an engine overload or defective cooling system.

Dash Panel Lights

There are 5 panel lights on the instrument panel:

Turn signals (green). Two lights, one on each side of the instrument panel. These lights will flash along with the turn indicator lights.

High beam indicator (blue). Located close to the headlight switch. This light will be “ON” when the high beams are “ON”.

Alternator warning (red). Located above the Battery Voltmeter. If this light is “ON” then the alternator has failed.

Transmission temperature warning (red). Located in the center of the intrument panel. If this light is “ON” then the transmission has overheated.

FUSES

There are two fuse panels under the dash and one fuse panel in the engine compartment.

Dash

Fuse panel 1 is powered through a 30 Amp fuse to the battery.

Fuse panel 2 is powered through the key switch.

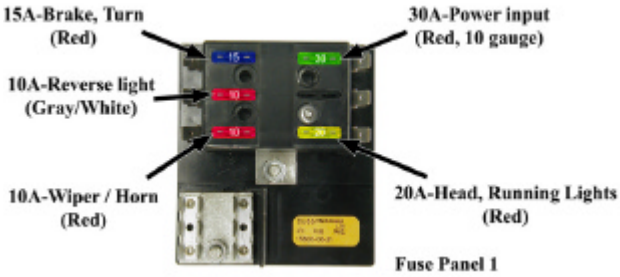

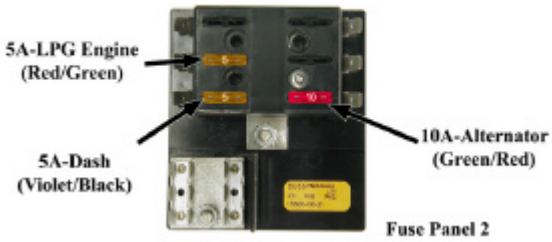

Engine Compartment

The fuse panel in the engine compartment is located in the upper right rear corner of the engine compartment.

Refer to the engine owners manual for information regarding the fuse panel in the engine compartment.

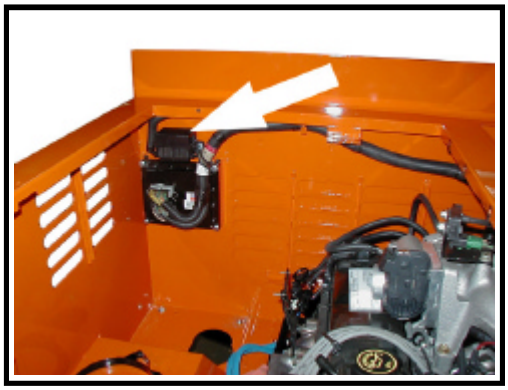

VEHICLE OPERATIONAL GUIDELINES

Safety Guidelines

- Only qualified and trained operators may drive this vehicle.
- Drive only on level surfaces or on surfaces having an incline of no more than 10% (5.6 degrees).
- Drive slowly when making a turn, especially if the ground is wet or when driving on an incline.
- This vehicle may overturn easily if turned sharply or when driven at high speeds.
- Observe all traffic regulations and speed limits.
- Keep all body parts (head, arms, legs) inside this vehicle while it is moving.
- Keep the vehicle under control at all times.
- Yield right of way to pedestrians, ambulances, fire trucks, or other vehicles in emergencies.
- Do not overtake another vehicle at intersections, blind spots, or other dangerous locations.
- Do not drive over loose objects, holes, or bumps.
- Yield right of way to pedestrians and emergencies vehicles.
- Stay in your driving lane under normal conditions, maintaining a safe distance from all objects.
- Keep a clear view ahead at all times.

Fuel Recommendation and Refilling the Fuel Tank

Refer to supplementary manual M7-001-22 for recommended fuel.

⚠WARNING

Do not overfill the fuel tank. Overfilling the fuel tank could result in fuel spillage and fire causing severe bodily injury and/or property damage.

⚠WARNING

All internal combustion engines give off various fumes and gases while running. Do not start or run the engine in a closed or poorly ventilated building where the exhaust gases can accumulate. Avoid breathing these gases as they may contain poisonous carbon monoxide which can endanger your health or life if inhaled steadily for even a few minutes.

Starting:

NOTE: Refer to supplementary manual M7-001-22 for additional information.

1. Make sure the shift lever is in the “PARK” position.
2. Set the parking brake.
3. Hold down the foot brake.
6. Insert the key and turn it to the “ON” position.
7. Rotate the key to the start position until the engine starts and then release.

   NOTE: If the engine does not start within 5-seconds, release the key and wait 10-seconds before attempting to start again.

8. Place the shift lever in the desired direction of travel. Refer to ***Vehicle Controls*** section for information regarding positions on the shift lever.
9. Release the parking brake.
10. Release the foot brake.
11. Slowly depress the accelerator pedal.

While driving:

- Slow down and sound the horn to warn pedestrians or when approaching a corner or other intersection.
- No reckless driving.
- Do not drive this vehicle on steep inclines or where prohibited.
- Immediately report any accidents or vehicle problems to a supervisor.

Loading and Unloading

- Do not carry more than the maximum number of passengers allowed for this vehicle.
- Do not exceed the cargo load capacity.
- Do not load cargo that can fall off.
- Be careful when handling cargo that is longer, wider, or higher than this vehicle, be sure to properly secure all loads.

Parking

Before leaving the vehicle:

- Place the shift lever in the “PARK” position.
- Set the parking brake.
- Turn the key switch to the “OFF” position and remove the key.

In addition:

- If parking this vehicle on an incline, turn the wheels to the curb, or block the wheels.
- Do not block fire aisles, emergency equipment, stairways, or exits.

Towing

To tow this vehicle, attach a tow strap to the front bumper tow-bar.

Place the shift lever in the “NEUTRAL” position.

Disconnect the drive shaft from the rear axle and tie it up to the frame.

⚠CAUTION **Towing this vehicle with the drive shaft connected may damage the transmission seals.**

Use another driver to steer this vehicle while it is being towed. Be sure the driver uses the brakes when the towing vehicle slows or stops. Do not tow the vehicle faster than 5 m.p.h. or its maximum designed speed, whichever is lower.

If at all possible, this vehicle should be placed on a carrier, rather than towing.

STORING AND RETURNING TO SERVICE

Both storing your vehicle and returning it to service should only be performed by authorized personnel.

Storing Your Vehicle (chassis)

- Clean the battery, then fill and charge before putting the vehicle in storage. Do not store batteries in a discharged condition.
- Lube all grease fittings.
- Clean, dry, and check all exposed electrical connections.
- Inflate tires to proper pressure (if applicable).
- For extended storage, the vehicle should be elevated so that the tires do not touch the ground.

If stored for a prolonged period, the batteries should be charged as follows:

Storage Temperature (F)	Charging Interval (months)
Over 60	1
Between 40 and 60	2
Below 40	6

Storing Your Vehicle (engine)

Refer to supplementary manual M7-001-22 for information regarding preparing the engine for storage.

Returning to Service

- Check the state of charge of the battery and charge if required.
- Perform ALL maintenance checks in the periodic checklist.
- Remove any blocks from the vehicle and/or place the vehicle down on to the ground.
- Test drive before putting into normal service.

ENGINE AND TRANSMISSION FLUIDS

Refer to supplementary manual M7-001-22 for engine coolant and oil information.

Refer to supplementary manual M7-001-21 for transmission fluid information.

⚠WARNING

Antifreeze contains mono ethylene glycol and other constituents which are toxic if taken internally and can be absorbed in toxic amounts on repeated or prolonged skin contact. Persons using antifreeze are recommended to adhere to the following precautions:

- **Antifreeze must never be taken internally. If antifreeze is swallowed accidentally, medical advice should be sought immediately.**
- **Precautions should be taken to avoid skin contact with antifreeze. In the event of accidental spillage onto the skin, antifreeze should be washed off as soon as practicable. If clothing is splashed with antifreeze, it should be removed and washed before being worn again, to avoid prolonged skin contact.**
- **For regular and frequent handling of antifreeze, protective clothing (plastic or rubber gloves, boots and impervious overalls or aprons) must be used to minimize skin contact.**

⚠WARNING

Prolonged and repeated contact with used engine oils may cause serious skin disorders including dermatitis and skin cancer.

PERIODIC MAINTENANCE SCHEDULE (CHASSIS ONLY*)

Maintenance Item	Weekly (20hrs)	Monthly (80hrs)	Quaterly (250hrs)	Semi - Annual (500hrs)	Annualy (1000hrs)
Check Condition of Tires and Tire Pressure	●				
Check All Lights, Horns, Beepers and Warning Devices	●				
Check and Fill Battery		●			
Check Brake System		●			
Check Steering System		●			
Check for Fluid Leaks		●			
Lubricate Vehicle			●		
Clean and Tighten All Wire Connections			●		
Wash and Service Battery			●		
Inspect and Lubricate Transmission Linkage			●		
Check Park Brake				●	
Check Front Wheel Bearings				●	
Check Rear Axle Oil				●	
Change Rear Axle Oil					●
Check and Tighten all Nuts and Bolts**		●**			●
Clean and Repack Front Wheel Bearings					●
Change Transmission Fluid and Filter and Adjust the Intermediate Bands per Specification					●

** - Refer to the supplementary manual M7-001-22 for information regarding engine periodic maintenance.*

*** - Perform after fisrt 80-hours then every 1,000 hours.*

⚠WARNING

Only properly trained and authorized technicians should perform maintenance or repairs to this vehicle. Repairs or maintenance by improperly trained or unauthorized personnel could cause improper operation of the vehicle or premature failure of components resulting in severe bodily injury and/or property damage.

MAINTENANCE GUIDELINES FOR SEVERE DUTY APPLICATIONS

This maintenance checklist is based on the average application. If the vehicle is operated under “severe conditions”, Service procedures should be conducted more frequently than specified. The frequency of service under severe conditions is determined by the use of the vehicle. The owner/operator must evaluate the operating environment to determine the increase in maintenance frequency.

In addition, the whole vehicle should be inspected monthly for signs of damage. The damage must be repaired immediately.

The following list is meant as a guide and is not all-inclusive of a “severe duty” application.

- Extreme temperature.
- Bumpy, dusty, or ill maintained roads.
- Excessively wet areas.
- Corrosive or contaminated areas.
- Frequent loading of vehicle at/near full capacity.
- Use on multiple shifts.

General Maintenance

TABLE OF CONTENTS

⚠WARNING

Internal combustion engines give off various fumes and gases while running, including carbon monoxide. Do not start or run the engine in a closed or poorly ventilated building where the exhaust gases can accumulate. Breathing these gases may result severe personal injury or death.

⚠WARNING

Many components in the engine compartment and exhaust system are hot. Some of these components will exceed 300º(F). Contact with these components will result in severe burns.

MAINTENANCE GUIDELINES

⚠WARNING

Periodic maintenance and service must be performed on this vehicle. Failure to complete these scheduled maintenance and service procedures can result in severe bodily injury and/or property damage. It is the owner and/or operators responsibility to insure that proper service and maintenance is performed on the vehicle, described in this manual.

⚠WARNING

1. Make sure the ignition switch is "OFF", then remove the key.

2. Place the shift lever in park.

3. Set the park brake.

4. Place blocks under the front wheels to prevent vehicle movement.

5. Disconnect the negative ground cable from the battery.

⚠WARNING

Read and follow all of the guidelines listed below. Failure to follow these guidelines may result in severe bodily injury and/or property damage.

- Avoid fire hazards and have fire protection equipment present in the work area. Conduct vehicle performance checks in an authorized area where safe clearance exists.
- Before starting the vehicle, follow the recommended safety procedures in Section 2, "Safety Rules and Operational Information."
- Ventilate the work area properly.
- Regularly inspect and maintain in a safe working condition, brakes, steering mechanisms, speed and directional control mechanisms, warning devices, lights, governors, guards, and safety devices.
- Inspect and maintain battery limit switches, protective devices, electrical conductors, and connections in conformance with Taylor-Dunn's® recommended procedures.
- Keep the vehicle in clean condition to minimize fire hazards and facilitate detection of loose or defective parts.
- Do not use an open flame to check level or leakage of battery electrolyte.
- Do not use open pans of fuel or flammable fluids for cleaning parts.
- Only properly trained and authorized technicians should perform maintenance or repairs to this vehicle.

TROUBLESHOOTING GUIDE

Symptom	Probable Cause
Steering Pulls in One Direction	Front End Out of Alignment
	Low Tire Pressure
Hard Steering	Dry Lube Points in Steering Linkage
	Damaged King Pin/Ball Joint
	Low Tire Pressure
Excessive Steering Play	Worn Ball Joints
	Mis-Adjusted or Worn Steering Gear
	Loose Steering Linkage
Lack of Power or Slow Operation	Brakes or Parking Brakes Dragging
	Worn Drive Gears
	Front End Out of Alignment
	Engine Problem (refer to the engine manual)
Abnormal Noise	Worn Drive Gears or Bearings
	Worn Front /Rear Axle Bearings
	Loose Lug Nuts
	Engine Components Worn (refer to the engine manual)
Oil Leak in Rear Bearing Area	Rear Wheel Bearing and/or Gasket Failed
	Drive Over Filled
Brake Pedal Soft or Spongy	Air in Brake Lines
Brake Pedal Low	Brake Worn (1/16" Wear Limit)
	Brake Fluid Low
	Brakes Out of Adjustment
Braking Power Low	Brake Worn (1/16" Wear Limit)
	Brake Pads Contaminated with Fluid
	Brake Pedal Linkage Binding
	Brakes Out of Adjustment
	Air in Brake Lines

LUBRICATION CHART

Illustration not available at time of printing

#	Description	Locations	Lubricant Type
1	-	-	-
2	King Pin	4	General Purpose Grease
3	Ball Joints / Rod Ends	4	General Purpose Grease
4	Drive Shaft Universal Joint	2	General Purpose Grease
5	Front Wheel Bearings	2	High Temperature Wheel Bearing Grease
6	-	-	-
7	-	-	-
8	-	-	-
9	Transmission Fluid	1	See transmission manual (M7-001-21)
10	Engine Oil		See engine manual (M7-001-20)

Front Axle Service

TABLE OF CONTENTS

INSPECT THE FRONT WHEEL BEARINGS AND KING PIN

⚠WARNING

1. Make sure the ignition switch is "OFF", then remove the key.
2. Place the shift lever in park.
3. Set the park brake.
4. Place blocks under the front wheels to prevent vehicle movement.
5. Disconnect the negative ground cable from the battery.

6. Raise the front of the vehicle and support with jack stands.

⚠WARNING

Always use a lifting strap, hoist, and jack stands, of adequate capacity to lift and support the vehicle. Failure to use lifting and support devices of rated load capacity may result in severe bodily injury.

7. Grab the top and bottom of the tire/wheel assembly. Feel for any movement or play while pulling and pushing on the top and bottom of the tire. Any movement or play is indication of loose wheel bearings or king pin.

   NOTE: Refer to the **Adjust Front Wheel Bearings** *section for information regarding the adjustment of the wheel bearings.*

   NOTE: If the king pin is loose, then refer to **Replace the King Pins and Bushings** *for information regarding replacing the king pin bushings. There are no adjustments for the king pin or bushings.*

8. Spin the wheel and listen for any grinding noise. Any grinding noise may be an indication of worn or damaged wheel bearings.

   NOTE: Refer to the **Replace Front Wheel Bearings** *section for information regarding the replacement of the wheel bearings.*

9. Lower the vehicle.
10. Reconnect the main positive and negative cables at the batteries.
11. Remove the blocks from behind the wheels.
12. Release the park brake and test drive the vehicle.

ADJUST FRONT WHEEL BEARINGS

⚠WARNING

1. Make sure the ignition switch is "OFF", then remove the key.
2. Place the shift lever in park.
3. Set the park brake.
4. Place blocks under the front wheels to prevent vehicle movement.
5. Disconnect the negative ground cable from the battery.

6. Raise the front of the vehicle and support with jack stands.

⚠WARNING

Always use a lifting strap, hoist, and jack stands, of adequate capacity to lift and support the vehicle. Failure to use lifting and support devices of rated load capacity may result in severe bodily injury.

7. Remove the hub dust cap and cotter pin.
8. While rotating the hub, tighten the spindle nut to 30 ft-lbs. This seats the bearings.
9. Back off the spindle nut one flat until the hub turns, but is not loose.
10. Spin the wheel and listen for any grinding noise. Any grinding noise may be an indication of worn or damaged wheel bearings.

    NOTE: Refer to the **Replace Front Wheel Bearings** *section for information regarding the replacement of the wheel bearings.*

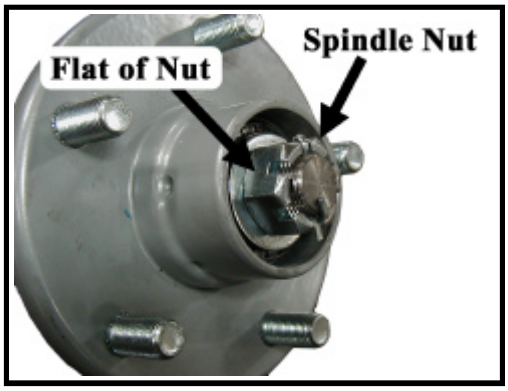

Hub with Dust Cap Removed

11. Install a new cotter pin.
12. Install the dust cap.
13. Lower the vehicle.
14. Reconnect the main positive and negative cables at the batteries.
15. Remove the blocks from behind the wheels.
16. Release the park brake and test drive the vehicle.

FRONT AXLE REMOVAL AND INSTALLATION

Removal

⚠WARNING

1. Make sure the ignition switch is "OFF", then remove the key.
2. Place the shift lever in park.
3. Set the park brake.
4. Place blocks under the rear wheels to prevent vehicle movement.
5. Disconnect the negative ground cable from the battery.

6. Raise the front of the vehicle and support with jack stands under the front axle beam.

⚠WARNING

Always use a lifting strap, hoist, and jack stands, of adequate capacity to lift and support the vehicle. Failure to use lifting and support devices of rated load capacity may result in severe bodily injury.

7. Remove both front wheels. Refer to ***Tires and Wheels*** section for information regarding removing the front wheels.
8. Tie up or support the front axle so it can not fall out of the vehicle.
9. Disconnect the drag link ball joint or rod end from the steering knuckle.

   NOTE: Refer to the **Replacing the Ball Joints** *section for information regarding the removal of the ball joints or rod ends.*

10. Disconnect the hydraulic brake lines from the brake calipers.
11. Remove the u-bolts holding the axle beam to the front springs.
12. Remove the nuts only from the lower bolts on the front spring hangers.
13. Raise the frame just high enough to remove the lower bolts on the front spring hangers and remove the bolts.
14. Raise the frame high enough to remove the front axle and support the frame with jack stands.

⚠WARNING

Always use a lifting strap, hoist, and jack stands, of adequate capacity to lift and support the vehicle. Failure to use lifting and support devices of rated load capacity may result in severe bodily injury.

Installation

⚠WARNING

1. Make sure the ignition switch is "OFF", then remove the key.
2. Place the shift lever in park.
3. Set the park brake.
4. Place blocks under the front wheels to prevent vehicle movement.
5. Disconnect the negative ground cable from the battery.

6. Raise the front of the vehicle and support with jack stands.

⚠WARNING

Always use a lifting strap, hoist, and jack stands, of adequate capacity to lift and support the vehicle. Failure to use lifting and support devices of rated load capacity may result in severe bodily injury.

7. Install the front axle in reverse order of removal.

   NOTE: Use all new cotter pins.

   NOTE: Refer to the **Replacing the Ball Joints** *section for information regarding the installing the ball joints or rod ends.*

   NOTE: Refer to **Tires and Wheels** *section for information regarding removing the front wheels.*

8. Rotate the wheels from a full right turn to a full left turn making sure that the brake hoses do not contact the wheels.
9. Realign the front wheels. Refer to ***Steering Component Service*** section for information regarding realigning the front wheels.
10. If equipped with front brakes, bleed the brakes. Refer to ***Brake Service*** section for information regarding bleeding the brakes.
11. Lower the vehicle.
12. Reconnect the main positive and negative cables at the batteries.
13. Remove the blocks from behind the wheels.
14. Release the park brake and test drive the vehicle.

FRONT AXLE DISASSEMBLY

Disassembling and reassembling involves removing and replacing the left and right steering knuckles and king pin bushings. Refer to the following sections for information regarding these procedures:

Replace the Steering Knuckle

Replace the King Pins and Bushings

NOTE: The front axle does not have to be removed unless the axle beam must be replaced. Refer to **Front Axle Removal and Installation** *for information regarding removing the front axle.*

REPLACE FRONT WHEEL BEARINGS

⚠WARNING

1. **Make sure the key-switch is in the "OFF" position, then remove the key.**
2. **Place the Shift lever in the neutral position.**
3. **Set the park brake.**
4. **Place blocks under the rear wheels to prevent vehicle movement.**
5. **Disconnect the main positive and negative cables at the battery.**

6. Raise the front of the vehicle and support with jack stands.

⚠WARNING

Always use a lifting strap, hoist, and jack stands, of adequate capacity to lift and support the vehicle. Failure to use lifting and support devices of rated load capacity may result in severe bodily injury.

7. Remove the tire/wheel assembly from the hub. Refer to ***Replace the Steering Knuckle*** for information regarding removing the steering knuckle.
8. Remove the hub dust cap, cotter pin, and spindle nut.
9. Remove the hub from the steering knuckle.

   NOTE: For a front disc brake option you must remove the brake body before removing the hub. Refer to the **Brakes** *section for information regarding the removal of the brake body.*

   NOTE: Catch the outer bearing as it falls out.

10. Thoroughly clean all grease from the inside of the hub and the bearings.
11. Inspect and replace the races and bearings as a set.

    NOTE: It is recommended to replace all four bearings and races in the left and right wheels as a set.

12. Assemble in reverse order, using new grease seals.
    a. Pack inner and outer bearings with grease.
    b. While rotating the hub, tighten the spindle nut to 30 ft-lbs. This seats the bearings.
    c. Back off the spindle nut one flat until the hub turns, but is not loose.
    d. Install a new cotter pin.

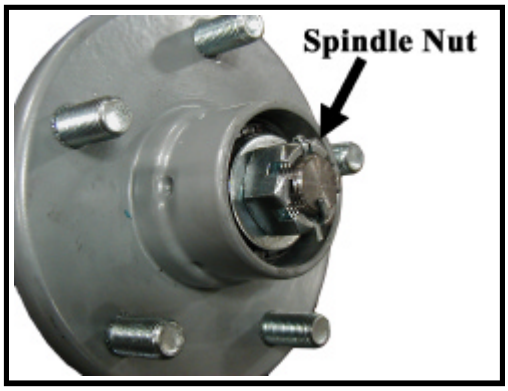

Hub with Dust Cap Removed

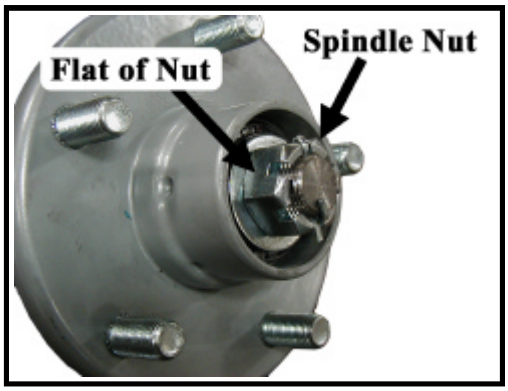

Hub with Dust Cap Removed

13. Install the hub dust cap.
14. Reinstall the brake body and the tire/wheel assembly.

    NOTE: Refer to the **Brakes** *section for information regarding the installation of the brake body.*

15. Rotate the wheels from a full right turn to a full left turn making sure that the brake hoses do not contact the wheels.
16. Lower the vehicle.
17. Reconnect the main positive and negative cables at the batteries.
18. Remove the blocks from behind the wheels.
19. Release the park brake and test drive the vehicle.

REPLACE THE KING PINS AND BUSHINGS

NOTE: Bronze bushings must be reamed or broached to the proper diameter after they are pressed into the steering knuckle.

⚠WARNING

Failure to correctly broach or ream bronze bushings may result in steering difficulty and loss of control of the vehicle causing severe bodily injury and /or property damage.

⚠WARNING

1. **Make sure the ignition switch is "OFF", then remove the key.**
2. **Place the shift lever in park.**
3. **Set the park brake.**
4. **Place blocks under the front wheels to prevent vehicle movement.**
5. **Disconnect the negative ground cable from the battery.**

6. Raise the front of the vehicle and support with jack stands.

⚠WARNING

Always use a lifting strap, hoist, and jack stands, of adequate capacity to lift and support the vehicle. Failure to use lifting and support devices of rated load capacity may result in severe bodily injury.

7. Remove the tire/wheel assembly. Refer to ***Tires and Wheels*** section for information regarding removing the tire/wheel assembly.
8. Remove the bolt and dust seal from the top of the king pin.
9. Drive the roll pin out from the axle beam and discard.
10. Support the steering knuckle so that it cannot fall to the ground.
11. Using a slide hammer, pull the king pin out from the axle beam.
12. Press the king pin bushings out of the steering knuckle.
13. Press new bushings into the steering knuckle.
    a) Ream or broach the new bushings to 1.126-1.128 inches.
14. Inspect the king pin for damage or wear. If any damage or wear is noted then the king pin must be replaced.
15. Reassemble in reverse order using a new roll pin.

NOTE: It is recommended that the thrust bearing be replaced whenever replacing the king pin bushings. Refer to the **Replacement Parts** *section for the orientation of the thrust bearing.*

16. Rotate the wheels from a full right turn to a full left turn making sure that the brake hoses do not contact the wheels.
17. Grease the bushings.
18. Lower the vehicle.
19. Reconnect the main positive and negative cables at the batteries.
20. Remove the blocks from behind the wheels.
21. Release the park brake and test drive the vehicle.

REPLACE THE STEERING KNUCKLE

⚠WARNING

1. **Make sure the key-switch is in the "OFF" position, then remove the key.**
2. **Place the Shift lever in the neutral position.**
3. **Set the park brake.**
4. **Place blocks under the rear wheels to prevent vehicle movement.**
5. **Disconnect the main positive and negative cables at the battery.**

6. Raise the front of the vehicle and support with jack stands.

⚠WARNING

Always use a lifting strap, hoist, and jack stands, of adequate capacity to lift and support the vehicle. Failure to use lifting and support devices of rated load capacity may result in severe bodily injury.

7. Remove the tire/wheel assembly. Refer to ***Tires and Wheels*** section for information regarding removing the tire/wheel assembly.
8. Remove the hub bearing cap, cotter pin and nut, then remove the hub from the steering knuckle.
9. Remove the drag link and/or tie rod from the steering knuckle. Refer to ***Replace the Ball Joints, Tie Rods, Drag Link*** in this section for information regarding removal of the drag link or tie rod.
10. While supporting the knuckle, remove the king pin and thrust bearing. Refer to Replace the ***King Pins and Bushings*** section for information regarding removing the king pin.
11. Remove the steering knuckle from the axle.
12. Thoroughly clean all bearings, nuts, washers, and bushings.
13. Assemble in reverse order.
14. Pack the thrust bearing with grease.

NOTE: Refer to ***Replace Front Wheel Bearings*** section for information regarding proper tightening of the spindle nut

NOTE: Refer to ***King Pins and Bushings*** section for information regarding installing the king pin.

NOTE: Refer to ***Replace the Ball Joints, Tie Rods, Drag Link*** section for information regarding installing the tie rod or drag link.

16. Install new cotter pins
17. Rotate the wheels from a full right turn to a full left turn making sure that the brake hoses do not contact the wheels.
18. Realign the wheels.

*NOTE: Refer to the **Steering** section for information regarding realignment of the front wheels.*

19. Lower the vehicle.
20. Reconnect the main positive and negative cables at the batteries.
21. Remove the blocks from behind the wheels.
22. Release the park brake and test drive the vehicle

Steering Component Service

TABLE OF CONTENTS

FRONT END ALIGNMENT

Center the Steering

⚠WARNING

1. Make sure the ignition switch is "OFF", then remove the key.
2. Place the shift lever in park.
3. Set the park brake.
4. Place blocks under the rear wheels to prevent vehicle movement.
5. Disconnect the negative ground cable from the battery.

6. Raise the front of the vehicle and support with jack stands.

⚠WARNING

Always use a lifting strap, hoist, and jack stands, of adequate capacity to lift and support the vehicle. Failure to use lifting and support devices of rated load capacity may result in severe bodily injury.

7. Turn the front wheels so that they are in the straight ahead position and then tie off the wheels so that they cannot turn from the straight ahead position.

⚠WARNING

Do not drive the vehicle while the steering wheel or front wheels are tied in position. Driving the vehicle while the steering wheel or front wheels tied in the position may cause loss of control of the vehicle resulting in severe bodily injury and/or property damage.

8. Remove the pitman arm from the steering gear.
9. Center the steering gear.

   NOTE: Refer to **Center the Steering Gear** *section for information regarding centering of the steering gear.*

10. At this point both the steering wheel ***and*** the front wheels should be tied up and held in position. If one or the other is not tied up then you must start again from the beginning.
11. Install the pitman arm on to the steering gear output shaft.

    NOTE: The steering wheel may need to be rotated slightly so that the splines on the shaft and arm line up.

12. Untie front wheels.
13. Reconnect the main positive and negative cables at the batteries.
14. Remove the blocks from behind the wheels.
15. Release the parking brake and test drive the vehicle.

Front wheel alignment

NOTE: It is recommended to center the steering before aligning the front wheels. Refer to the **Center the Steering** *section for information.*

⚠WARNING

1. Make sure the ignition switch is "OFF", then remove the key.
2. Place the shift lever in park.
3. Set the park brake.
4. Place blocks under the rear wheels to prevent vehicle movement.
5. Disconnect the negative ground cable from the battery.

6. Raise the front of the vehicle and support with jack stands.

⚠WARNING

Always use a lifting strap, hoist, and jack stands, of adequate capacity to lift and support the vehicle. Failure to use lifting and support devices of rated load capacity may result in severe bodily injury.

7. Turn the front wheels so that they are in the straight ahead position and tie off the steering wheel so that it cannot rotate.

⚠WARNING

Do not drive the vehicle while the steering wheel or front wheels are tied in position. Driving the vehicle while the steering wheel or front wheels tied in the position may cause loss of control of the vehicle resulting in severe bodily injury and/or property damage.

8. Using a piece of chalk, mark a line around the center of both front tires.

   HINT: Hold the chalk on the center of the tire and rotate the tire to mark the line.

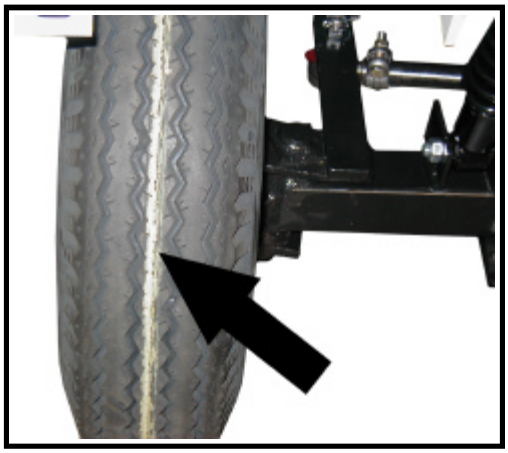

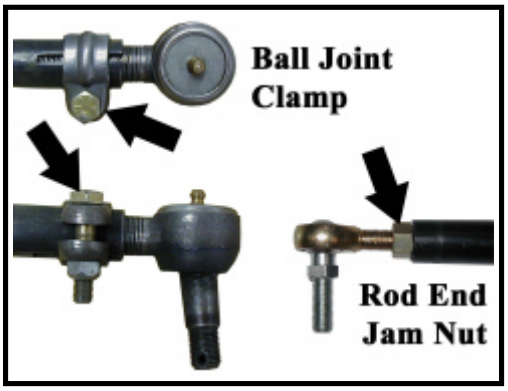

9. Loosen the ball joint clamps or the rod end jam nuts on the tie rod.

   NOTE: Remember the position and orientation of the ball joint clamps.

10. Lower the front wheels to the ground and push the vehicle back and forth a few feet to settle the suspension.
11. Measure the distance between the lines at the front of the tires.
12. Measure the distance between the lines at the rear of the tires.
13. Adjust the tie rod so that the distance at the front and rear of the tires is the same.
14. If equipped with ball joints, position the ball joint clamps in their original location and orientation.

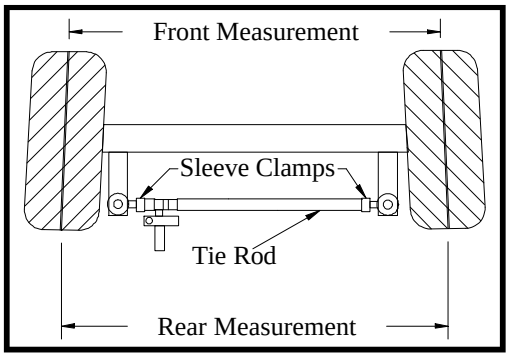

⚠WARNING

Rotate the steering wheel from a full left turn to a full right turn and make sure that the ball joint clamps do not contact any other component. Clamps positioned so that they contact other components may result in steering failure and loss of control of the vehicle causing severe bodily injury and/or property damage.

15. Tighten the ball joint clamps (28-32 ft. lbs.) or the rod end jam nuts.
16. Untie the steering wheel.
17. Reconnect the main positive and negative cables at the batteries.
18. Remove the blocks from behind the wheels.
19. Release the parking brake and test drive the vehicle.

INSPECT BALL JOINTS

NOTE: A set of ball joints and/or rod ends will wear at the same rate. If a ball joint and or rod end is worn out, then all should be replaced as a set.

⚠WARNING

1. **Make sure the ignition switch is "OFF", then remove the key.**
2. **Place the shift lever in park.**
3. **Set the park brake.**
4. **Place blocks under the rear wheels to prevent vehicle movement.**
5. **Disconnect the negative ground cable from the battery.**

6. Tie off the front wheels so that they cannot turn.

⚠WARNING

Do not drive the vehicle while the steering wheel or front wheels are tied in position. Driving the vehicle while the steering wheel or front wheels tied in position may cause loss of control of the vehicle resulting in severe bodily injury and/or property damage.

7. While watching the ball joints, rapidly rotate the steering wheel to the left and right.
8. If the ball joint housing moves up or down then the ball joint is worn out and should be replaced. Refer to section ***Replacing a Ball Joint*** for information regarding replacing ball joints.
9. Untie the front wheels.
10. Reconnect the main positive and negative cables at the batteries.
11. Remove the blocks from behind the wheels.
12. Release the parking brake and test drive the vehicle.

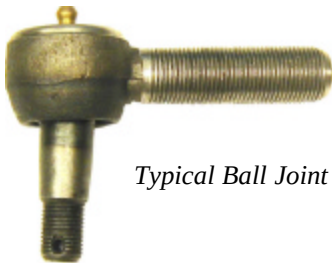

Typical Ball Joint

INSPECT DRAG LINK ROD ENDS

NOTE: A set of ball joints and/or rod ends will wear at the same rate. If a ball joint and or rod end is worn out, then all should be replaced as a set.

⚠WARNING

1. Make sure the ignition switch is "OFF", then remove the key.
2. Place the shift lever in park.
3. Set the park brake.
4. Place blocks under the rear wheels to prevent vehicle movement.
5. Disconnect the negative ground cable from the battery.

6. Tie off the front wheels so that they cannot turn.

⚠WARNING

Do not drive the vehicle while the steering wheel or front wheels are tied in position. Driving the vehicle while the steering wheel or front wheels tied in position may cause loss of control of the vehicle resulting in severe bodily injury and/or property damage.

7. While watching the ball stud, rapidly rotate the steering wheel to the left and right.
8. If any play is seen in the ball stud, then the needs to be adjusted or replaced. Refer to ***Replace the Ball Joints, Tie Rods, and Drag Link*** section for information regarding the drag link rod end.
9. Untie the front wheels.
10. Reconnect the main positive and negative cables at the batteries.
11. Remove the blocks from behind the wheels.
12. Release the parking brake and test drive the vehicle.

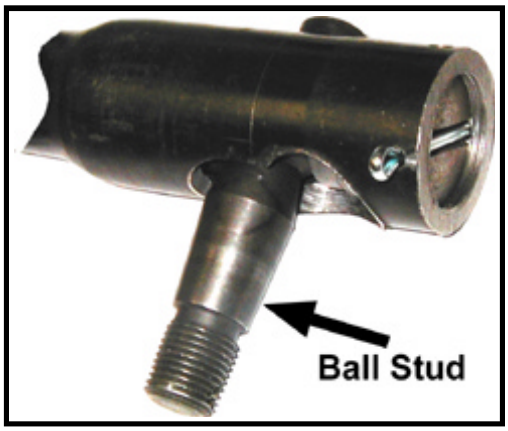

ADJUST THE STEERING GEAR

NOTE: In some vehicle configurations it may be necessary to remove the steering gear to perform this procedure. Refer to **Replace the Steering Gear** *for information regarding removing the steering gear.*

⚠WARNING

1. Make sure the ignition switch is "OFF", then remove the key.
2. Place the shift lever in park.
3. Set the park brake.
4. Place blocks under the rear wheels to prevent vehicle movement.
5. Disconnect the negative ground cable from the battery.

6. Raise the front of the vehicle and support with jack stands.

⚠WARNING

Always use a lifting strap, hoist, and jack stands, of adequate capacity to lift and support the vehicle. Failure to use lifting and support devices of rated load capacity may result in serious bodily injury.

7. Disconnect the drag link from the pitman arm.

   NOTE: Refer to **Replace the Ball Joints** *section for information regarding removing the ball joint from the drag link.*

8. Loosen the gear lash jam nut and the worm bearing adjuster jam nut.
9. Unscrew the gear lash adjuster all of the way to the stop.
10. Loosen the worm bearing adjuster and then tighten just enough to remove all end play from the input shaft and then an additional 1/8 turn more.

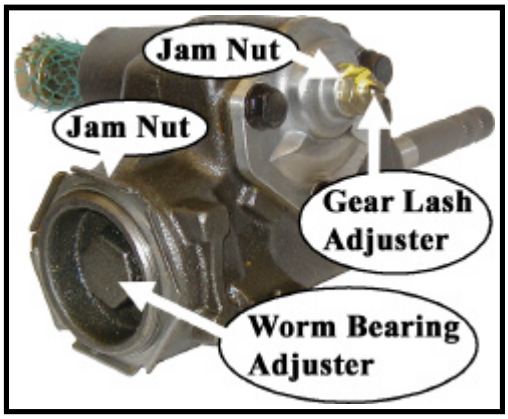

11. While holding the worm bearing adjuster so that it cannot turn, tighten the worm bearing adjuster jam nut.
12. Find the center position of the steering shaft:
    A. Turn the steering shaft all of the way in one direction.
    B. While counting the rotations, turn the steering shaft all of the way in the opposite direction.
    C. Turn the steering shaft 1/2 the number of turns in the original direction.

13. While rotating the input shaft back and forth through its centered position, adjust the gear lash adjusting screw so that there is a slight drag as the steering gear is rotated through its centered position.
14. While holding the gear lash adjusting screw so that it cannot turn, tighten the gear lash adjusting screw jam nut.
15. Reconnect the main positive and negative cables at the batteries.
16. Remove the blocks from behind the wheels.
17. Release the parking brake and test drive the vehicle.

REPLACE THE STEERING SHAFT

⚠WARNING

1. **Make sure the ignition switch is "OFF", then remove the key.**
2. **Place the shift lever in park.**
3. **Set the park brake.**
4. **Place blocks under the rear wheels to prevent vehicle movement.**
5. **Disconnect the negative ground cable from the battery.**

6. Remove the steering wheel.

   NOTE: Refer to **Replace the Steering Wheel** *section for information regarding removing the steering wheel.*

7. Remove the horn switch contacts cover and the horn switch contacts.
8. Remove the lower steering column tube bushing from the tube.
9. Loosen or remove the steering column tube clamp and remove the tube.
10. Loosen the coupler set screw and remove the steering shaft from the vehicle.
11. Lightly grease the steering gear input shaft splines, steering wheel splines, upper and lower steering shaft bushing.

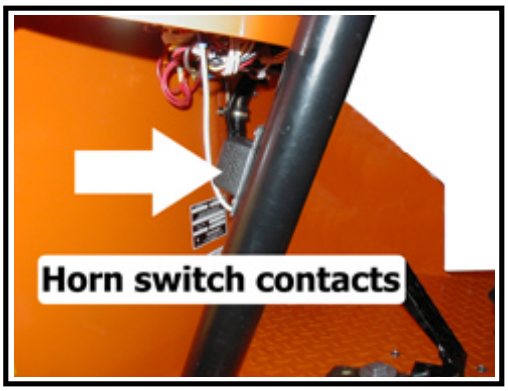

12. Install the steering shaft in reverse order.
13. Reconnect the main positive and negative cables at the batteries.
14. Remove the blocks from behind the wheels.
15. Release the parking brake and test drive the vehicle.

REPLACE THE STEERING WHEEL

⚠WARNING

1. **Make sure the ignition switch is "OFF", then remove the key.**
2. **Place the shift lever in park.**
3. **Set the park brake.**
4. **Place blocks under the rear wheels to prevent vehicle movement.**
5. **Disconnect the negative ground cable from the battery.**

6. Remove the horn switch.
7. Remove the steering wheel nut.
8. Using a steering wheel puller, remove the steering wheel.
9. Position the front wheels in the straight ahead position.

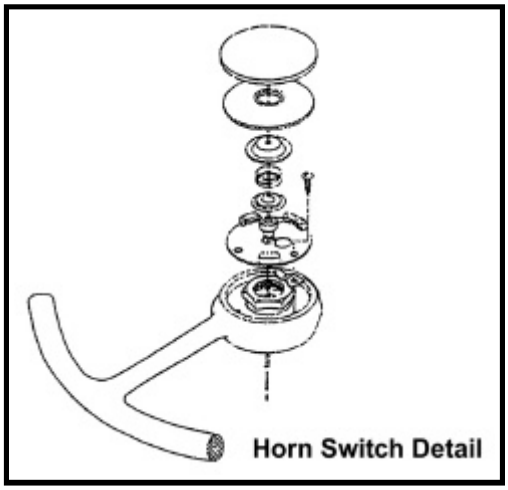
Horn Switch Detail

10. Lightly grease the steering wheel splines and install the replacement steering wheel orientated as shown in the illustration to the right.
11. Tighten the steering wheel nut to 28-32 ft lbs.
12. Reinstall the horn switch (if equipped).
13. Reconnect the main positive and negative cables at the batteries.
14. Remove the blocks from behind the wheels.

REPLACE THE STEERING GEAR

⚠WARNING

1. **Make sure the ignition switch is "OFF", then remove the key.**
2. **Place the shift lever in park.**
3. **Set the park brake.**
4. **Place blocks under the rear wheels to prevent vehicle movement.**
5. **Disconnect the negative ground cable from the battery.**

6. Remove the steering wheel. Refer to ***Replace the Steering Wheel*** section for information regarding removing the steering wheel.
7. Remove the steering shaft. Refer to ***Replace the Steering Shaft*** section for information regarding removing the steering shaft.
8. Remove the pitman arm using a pickle fork.

   NOTE: On some vehicle configurations it may be required to remove the drag link from the pitman arm. Refer to **Replace the Ball Joints** *section for information regarding removing the ball joint from the pitman arm.*
9. Support the steering gear so that it cannot fall out of the vehicle.
10. Remove the bolts holding the steering gear to the vehicle frame and remove the steering gear from the vehicle.

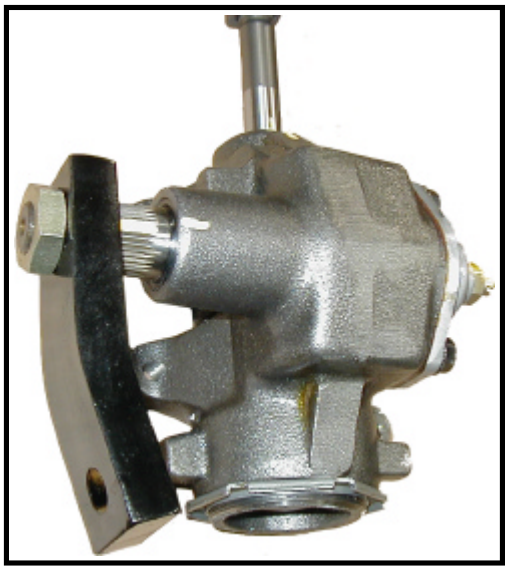

Steering Gear with Pitman Arm

⚠WARNING

Failure to support the steering gear will result in the steering gear falling out of the vehicle and could cause property damage and/ or severe bodily injury.

11. Center the steering gear. Refer to ***Center the Steering Gear*** section for information regarding centering the steering gear.
12. Install in reverse order. Torque the pitman arm nut to 75-100 ft-lbs.
13. Reconnect the main positive and negative cables at the batteries.
14. Remove the blocks from behind the wheels.
15. Release the parking brake and test drive the vehicle.

REPLACE THE BALL JOINTS, TIE RODS, AND DRAG LINK

Ball Joint

⚠WARNING

1. Make sure the ignition switch is "OFF", then remove the key.
2. Place the shift lever in park.
3. Set the park brake.
4. Place blocks under the rear wheels to prevent vehicle movement.
5. Disconnect the negative ground cable from the battery.

6. Raise the front of the vehicle and support with jack stands.

⚠WARNING

Always use a lifting strap, hoist, and jack stands, of adequate capacity to lift and support the vehicle. Failure to use lifting and support devices of rated load capacity may result in severe bodily injury.

7. Loosen the ball joint jam nut on the steering sleeve.
8. Remove the cotter pin and ball joint nut.
9. Using a pickle fork, remove the ball joint from the steering arm.
10. Remove the ball joint from the steering sleeve.

    HINT: Count the number of turns required to remove the ball joint from the sleeve. This will make it easier to realign the wheels.

11. Install the new ball joint into the steering sleeve. Screw the ball joint into the sleeve the same number of turns counted in the previous step. Do not tighten the ball joint jam nut at this time.
12. Install the ball joint into the steering arm. Tighten the ball joint nut to 40-45 ft-lbs. and install a new cotter pin.
13. Realign the front wheels.

    NOTE: Refer to the **Steering** *section for information regarding realignment of the front wheels.*

14. Lower the vehicle.
15. Reconnect the main positive and negative cables at the batteries.
16. Remove the blocks from behind the wheels.
17. Release the park brake and test drive the vehicle.

Drag Link Rod End

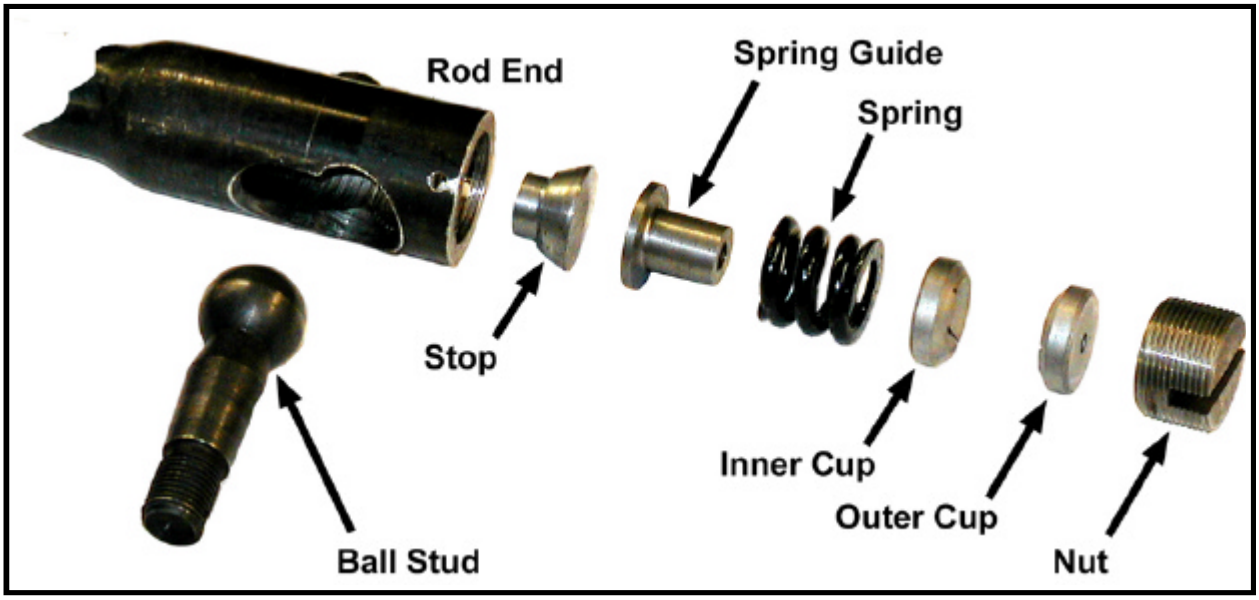

The drag link rod end has a limited amount of adjustment.

Inspection

Measure the distance between the top of the nut and the end of the drag link rod end (see illustration).

If the top of the nut is more than 0.200” below the end of the rod end then the rod end is worn out and must be rebuilt or replaced.

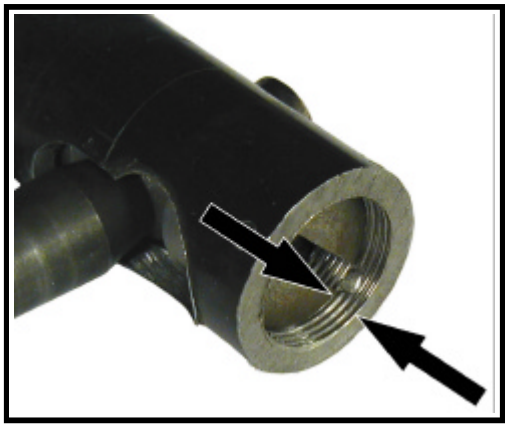

Adjustment

Remove the cotter pin and discard.

Tighten the nut until it bottoms out and then loosen until the slot is in-line with a hole in the housing and insert a new cotter pin.

After adjusting be sure that it passes the inspection detail listed above.

Replacing the Drag Link

The Drag Link is the linkage that connects the steering gear pitman arm to the steering knuckle.

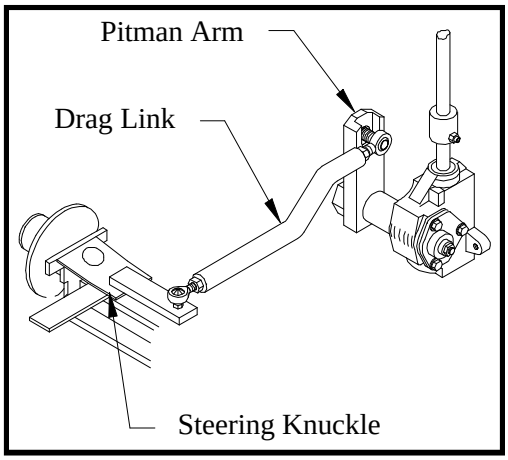

Typical Drag Link

⚠WARNING

1. Make sure the ignition switch is "OFF", then remove the key.
2. Place the shift lever in park.
3. Set the park brake.
4. Place blocks under the rear wheels to prevent vehicle movement.
5. Disconnect the negative ground cable from the battery.

6. Raise the front of the vehicle and support with jack stands.

⚠WARNING

Always use a lifting strap, hoist, and jack stands, of adequate capacity to lift and support the vehicle. Failure to use lifting and support devices of rated load capacity may result in severe bodily injury.

7. Remove the ball joints or rod ends from the steering knuckle and pitman arm.

   NOTE: Refer to the **Disassembling the Drag Link Rod End** *section for information regarding the removal of the rod ends.*

8. Remove the drag link as an assembly.
9. Install in reverse order.
10. Realign the front wheels.

    NOTE: Refer to the **Steering** *section for information regarding realignment of the front wheels.*

11. Lower the vehicle.
12. Reconnect the main positive and negative cables at the batteries.
13. Remove the blocks from behind the wheels.
14. Release the park brake and test drive the vehicle.

Replacing the Tie Rod

The Tie Rod is the linkage that connects the two steering knuckles together. Refer to the illustration below..

6. Raise the front of the vehicle and support with jack stands.
7. Remove the ball joints or rod ends from the steering knuckles.

   NOTE: Refer to the **Replacing the Ball Joints** *section for information regarding the removal of the ball joints or rod ends.*

8. Remove the tie rod as an assembly.

⚠WARNING

1. Make sure the ignition switch is "OFF", then remove the key.
2. Place the shift lever in park.
3. Set the park brake.
4. Place blocks under the rear wheels to prevent vehicle movement.
5. Disconnect the negative ground cable from the battery.

9. Install in reverse order.

⚠WARNING

Always use a lifting strap, hoist, and jack stands, of adequate capacity to lift and support the vehicle. Failure to use lifting and support devices of rated load capacity may result in severe bodily injury.

10. Realign the front wheels.

    NOTE: Refer to the **Steering** *section for information regarding realignment of the front wheels.*

11. Lower the vehicle.
12. Reconnect the main positive and negative cables at the batteries.
13. Remove the blocks from behind the wheels.
14. Release the park brake and test drive the vehicle.

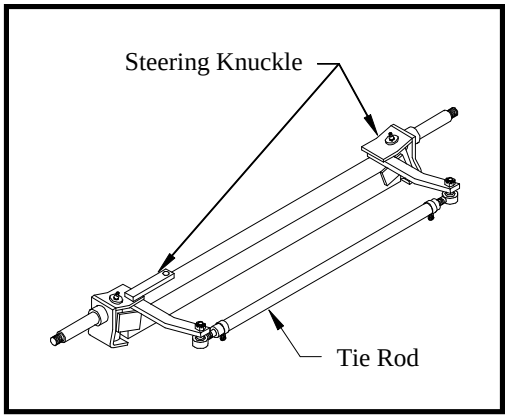

Typical Front Axle Assembly

CENTER THE STEERING GEAR

NOTE: The drag link must be disconnected from the pitman arm or the pitman arm removed from the steering gear to perform this procedure. Refer to the appropriat section for details.

1. Remove the pitman arm.
2. Rotate the input shaft clockwise until it stops.
3. While counting the rotations, rotate the input shaft counter clockwise until it stops.
4. Rotate the input shaft clockwise 1/2 the rotations counted in the previous step.
4. Mark the input and pitman shaft in relation to the housing.

REPAIR THE STEERING GEAR

Disassembly

NOTE: The steering gear must be removed from the vehicle for this procedure. Refer to **Replace the Steering Gear** *section for information regarding removing the steering gear.*

NOTE: The steering gear is packed with grease. Only perform maintenance on the steering gear in an area that will contain any grease that may spill out of the steering gear when it is disassembled.

Refer to the illustration at the end of this section for a blown up view of the steering gear assembly.

1. Center the steering gear.
   A. Turn the steering shaft all of the way in one direction.
   B. While counting the rotation, turn the steering shaft all of the way in the opposite direction.
   C. Turn the steering shaft 1/2 the number of turns in the original direction.
2. Remove the worm bearing adjuster locking ring and the worm bearing adjuster.

3. Remove the side cover/pitman shaft assembly by removing the three side cover bolts and then pulling the assembly out of the housing.

   NOTE: The side cover/pitman shaft assembly normally does not have to be disassembled.

4. Remove the worm shaft and ball nut assembly from the bottom of the housing.
5. Remove the worm shaft seal.
6. Remove the pitman shaft seal.
7. Remove the upper worm bearing and bearing cup from the housing.

8. The ball nut assembly consists of two sets of ball bearings that recirculate in two channels in the ball nut housing. The bearings may fall out once the bearing guides are removed. Be careful not to lose any of the bearings.
9. Remove the ball guide clamps, ball guides and all of the ball bearings.
10. Remove the ball nut from the worm shaft.
11. Thoroughly clean and inspect all parts for signs of corrosion, damage or wear and replace as required.

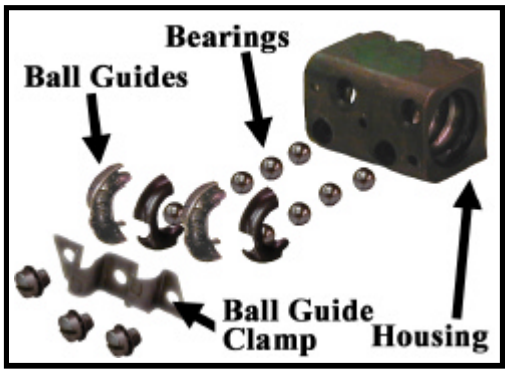

Reassembly

1. Lightly lubricate all parts before reassembly.
2. Install a new worm shaft seal and pitman shaft seal into the housing.
3. Install the upper worm bearing cup.
4. Divide the ball bearing into two equal groups.
5. Position the ball nut onto the worm as shaft as shown in the illustration.
6. Insert the ball guides into the ball nut.
7. Insert each group of bearings into the ball guides.

   NOTE: Do not rotate the worm shaft while installing the bearings. This may cause one or more of the bearings to enter the crossover passage in the ball nut, causing improper operation.

8. Install the ball guide clamp.

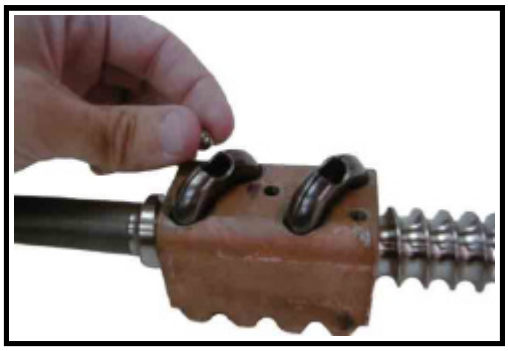

9. Place the upper worm bearing on the worm shaft and install the worm shaft/ball nut assembly into the housing being careful not to damage the worm shaft seal.

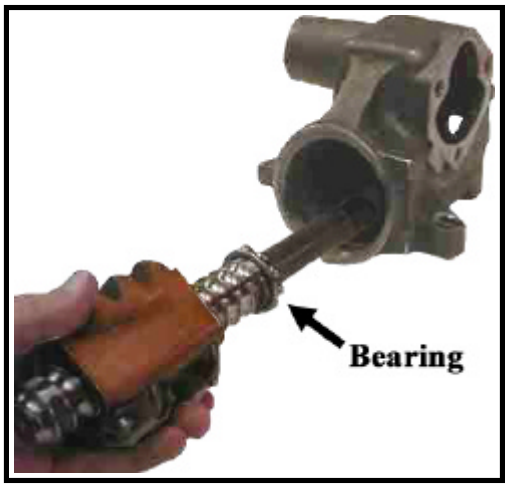

10. Install the assembled worm bearing adjuster into the housing and tighten just enough to remove all play in the worm shaft.
11. Install, but do not tighten the worm bearing adjuster lock nut.
12. Rotate the worm shaft to center the ball nut in the housing.
13. Place a new gasket onto the housing and install the assembled pitman shaft/side cover onto the housing using two of the three mounting bolts.
14. Pack the steering gear with grease through the open side cover bolt hole and then install the bolt.
15. Adjust the steering gear.

    NOTE: Refer to **Adjust the Steering** *gear section for information regarding adjusting the steering gear.*

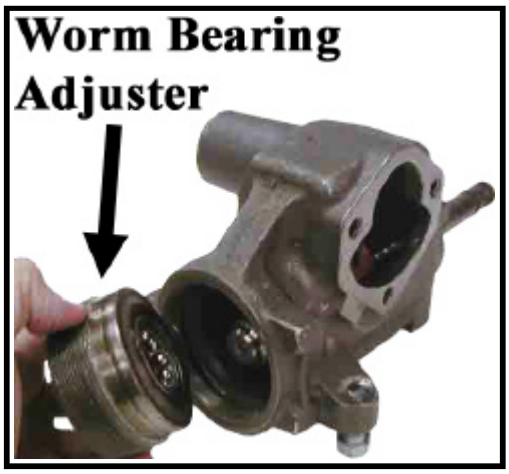

16. Once the adjustments are completed, make sure that the locking ring and jam nut are tight.

Exploded View of Steering Gear

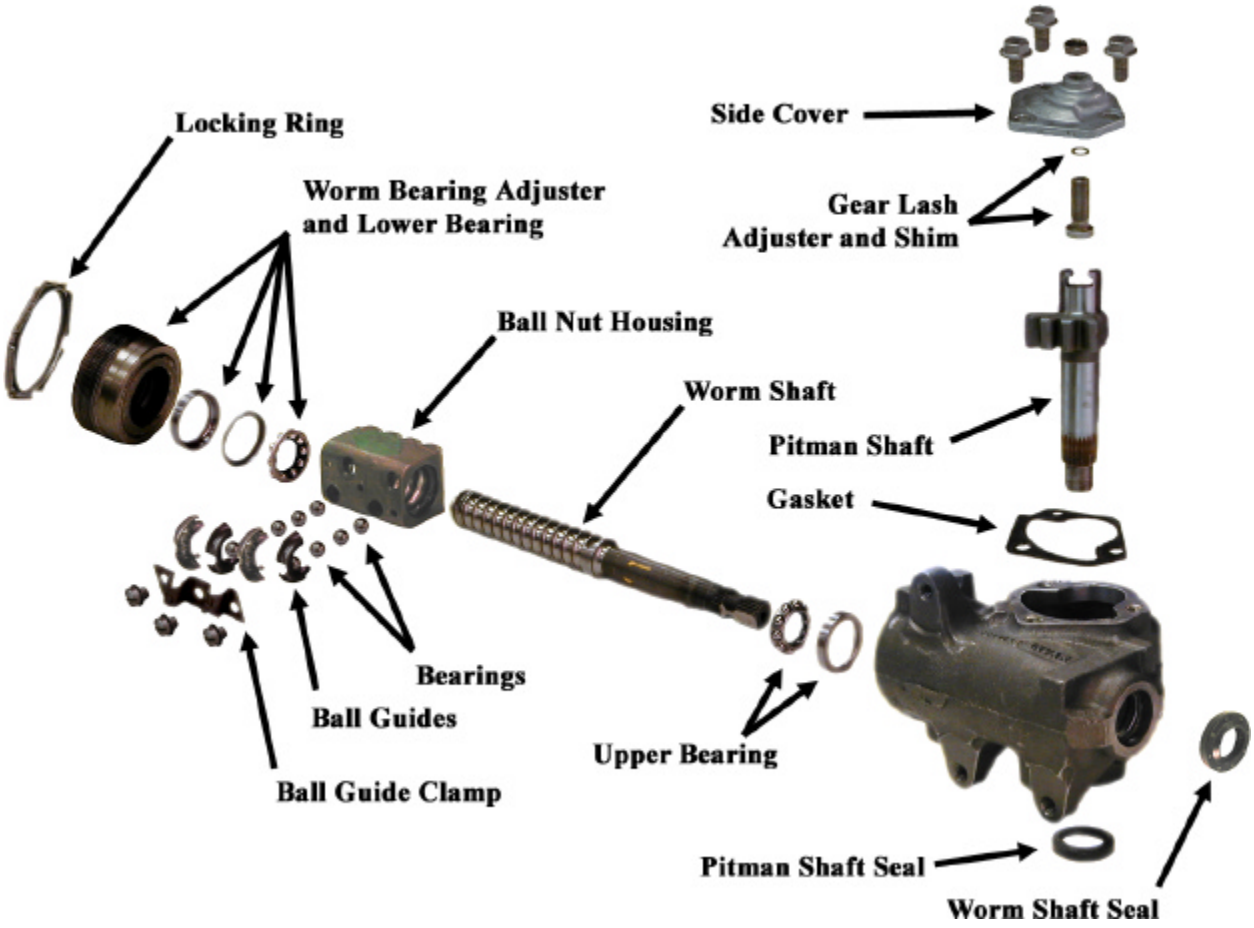

Brake Service

TABLE OF CONTENTS

INSPECT THE SERVICE BRAKE

Auto-Adjust Brake Mechanism Operation

The auto-adjust mechanism is located on the bottom of the brake assembly and accessible through the oval slot in the brake drum. As the brake pad material wears down, the distance the brake shoes travel to engage the brake drum becomes longer. When the travel becomes long enough, the brake lever engages the auto-adjust lever and causes it to index a tooth on the star wheel adjuster. This rotates the adjuster, which decreases the travel needed for the brake shoes to engage the brake drum.

NOTE: The only time the brakes should be manually adjusted is when an internal component of the braking system has been removed.

NOTE: The brakes will not require manual adjustment if any part of the external mechanical linkages or cables have been removed.

NOTE: The symptom of a low brake pedal may indicate that the auto adjuster is not working. Remove the vehicle from service and repair the brakes.

Inspecting the Rear Auto-Adjust Brake Mechanism

⚠WARNING

1. Make sure the ignition switch is "OFF", then remove the key.
2. Place the shift lever in park.
3. Set the park brake.
4. Place blocks under the front wheels to prevent vehicle movement.
5. Disconnect the negative ground cable from the battery.

6. Raise the rear of the vehicle and support with jack stands.

⚠WARNING

Always use a lifting strap, hoist, and jack stands, of adequate capacity to lift and support the vehicle. Failure to use lifting and support devices of rated load capacity may result in serious bodily injury.

7. Using the appropriate procedure, remove the brake drum.
8. Release the park brake.
9. Back off the auto adjuster star wheel one or two turns.
10. Reinstall the brake drum and depress the bake pedal.
11. As the brake pedal is depressed, the auto adjuster indexes the star wheel adjuster causing a click.
12. Lower the vehicle.
13. Reconnect the main positive and negative at the batteries.
14. Remove the blocks from behind the wheels.
15. Test drive the vehicle

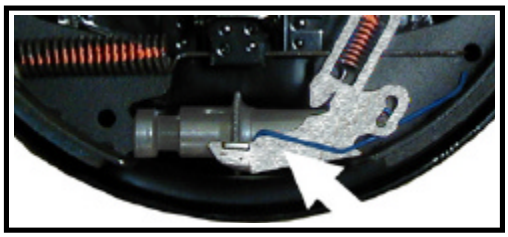

Auto Adjustor Lever (K60 shown)

Front Disc Brake Pads

⚠WARNING

Current Taylor-Dunn® brakes are asbestos free. However, there is the possibility that the original brakes were replaced with aftermarket parts containing asbestos. Since this possibility exists, all brake parts should be handled as if they contain asbestos. Refer to appendix C for recommended handling precautions.

NOTE: The brake pad must be removed to accurately measure the lining thickness. Refer to **Replace the Front or Rear Brake Pads** *section for information on removing the brake pads.*

Measure the brake pad lining at the thinnest point on the pad. If the brake pad lining is 1/16-inch or less then the brake pad must be replaced.

It is recommended to replace the left and right side brake pads as a set.

Front Disc Brake Rotor

⚠WARNING

Current Taylor-Dunn® brakes are asbestos free. However, there is the possibility that the original brakes were replaced with aftermarket parts containing asbestos. Since this possibility exists, all brake parts should be handled as if they contain asbestos. Refer to appendix C for recommended handling precautions.

NOTE: The front brake rotor is an integral part of the front hub. If the brake rotor is worn beyond its service limits, then the front hub must be replaced. Refer to **Front Axle Service** *for information on replacing the front hub.*

NOTE: The wheel must be removed to accurately measure the rotor thickness. Refer to **Tires and Wheels** *section for information on removing the wheel.*

1. Measure the run out of the rotor at its maximum diameter. If the run out exceeds 0.005 inches, then the rotor must be machined. Do not machine the rotor beyond its service limits.
2. The minimum thickness of the brake rotor is 0.250 inches. Measure the thickness of the brake rotor in 3 places. If the rotor thickness is less than the minimum thickness, then the rotor must be replaced.

⚠WARNING

Do not use a rotor that is worn beyond its service limits. A rotor worn beyond its service limits could fail and cause loss of brakes resulting in severe bodily injury and/or property damage.

Rear Brake Shoes

⚠WARNING

Current Taylor-Dunn® brakes are asbestos free. However, there is the possibility that the original brakes were replaced with aftermarket parts containing asbestos. Since this possibility exists, all brake parts should be handled as if they contain asbestos. Refer to appendix C for recommended handling precautions.

NOTE: The wheel must be removed to accurately measure the brake shoes. Refer to **Tires and Wheels** *section for information on removing the wheel.*

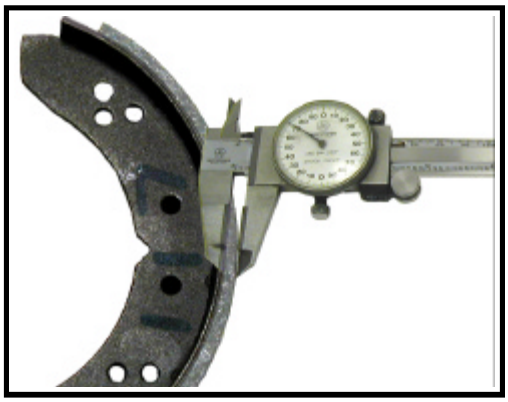

Measure the brake shoe lining at the thinnest point on the shoe. If this is 1/16-inch or less then the brake shoe must be replaced.

NOTE: If this is a riveted lining, then the measurement must be to the top of the rivets.

It is recommended to replace the left and right side brake shoes as a set.

Rear Brake Drum

⚠WARNING

Current Taylor-Dunn® brakes are asbestos free. However, there is the possibility that the original brakes were replaced with aftermarket parts containing asbestos. Since this possibility exists, all brake parts should be handled as if they contain asbestos. Refer to appendix C for recommended handling precautions.

If the brake drum is grooved or worn beyond the service limit then the brake drum must be replaced.

K60: The maximum diameter of the brake drum should stamped in the casting of the drum.

K45: The maximum diameter of the brake drum is 9.015 inches.

Measure the inside diameter of the brake drum in 3 places. If any measurement is greater than the maximum diameter specified above, then the drum must be replaced.

If the difference between any measurement is 0.005 inches, then the drum should be machined.

⚠WARNING

Do not use a brake drum that is worn beyond its service limits. A drum worn beyond its service limits could fail and cause loss of brakes resulting in severe bodily injury and/or property damage.

ADJUST THE SERVICE BRAKES

The hydraulic disc brake system is automatically adjusted. A low brake pedal or lack of braking power could be caused by:

- Brake fluid level low in the master cylinder. See ***Check the Master Cylinder Fluid*** section.
- Air in the brake lines. See ***Bleed the Brakes*** section.
- Worn brake pads. See ***Inspect the Service Brake*** section.
- Worn brake rotor. See ***Inspect the Service Brake*** section.
- Binding brake pedal linkage.

If you are experiencing a low brake pedal or lack of braking power, the entire brake system should be inspected.

Rear Drum Brake Adjustments

NOTE: This vehicle is equipped with self-adjusting brakes. The need to adjust the brakes manually may be an indication that the auto-adjust mechanism is not functioning properly. Refer to **Inspecting the Auto-Adjust Brake Mechanism** *for information on the auto-adjust mechanism.*

⚠WARNING

1. Make sure the ignition switch is "OFF", then remove the key.
2. Place the shift lever in park.
3. Set the park brake.
4. Place blocks under the front wheels to prevent vehicle movement.
5. Disconnect the negative ground cable from the battery.

6. Raise the rear of the vehicle and support with jack stands.
7. Release the park brake.
8. Remove the rubber plug from the adjusting access hole located at the bottom of the brake backing plate.

Rubber plug, K 60 Shown

9. Turn the star wheel until the brakes lock the wheel (rotate the star wheel down).

Star wheel seen through the access hole after the plug is removed

10. Release the auto-adjust lever inside the brake, and back off the star wheel just enough so that the wheel spins freely with a minimum of drag.
11. Repeat steps 8 through 10 for the other side.
12. Lower the vehicle.
13. Reconnect the main positive and negative at the batteries.
14. Remove the blocks from behind the wheels.
15. Test drive the vehicle.

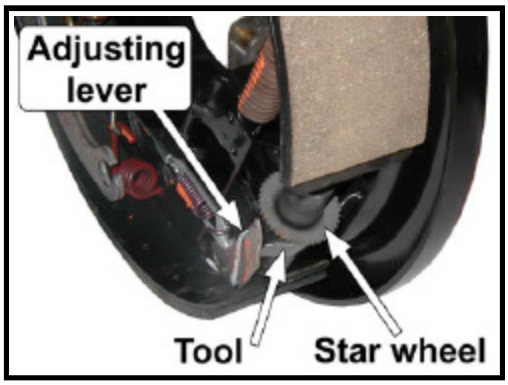

Inside view of released adjusting lever with the tool inserted through the access hole (K 60 Shown)

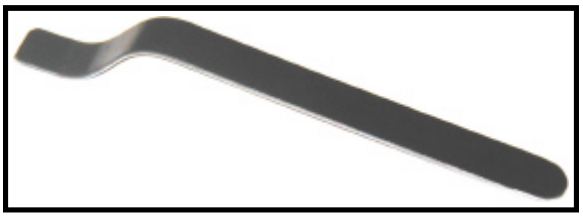

Example of a tool used to release the adjusting lever

ADJUST THE PARKING BRAKE

Rear Drum Brake

There are two adjustments for the parking brake. The primary adjustment is on the park brake handle itself. The secondary adjustment is the park brake cable. The park brake cable does not require routine adjustments. It should only be adjusted if any part of the brake linkages are replaced.

⚠WARNING

1. Make sure the ignition switch is "OFF", then remove the key.
2. Place the shift lever in park.
3. Hold the vehicle in place with the service brake.

Primary Adjustment (handle)

4. If the park brake is set, release the park brake.
5. Rotate the knob on the park brake handle clockwise to tighten the park brake or counter clockwise to loosen the park brake.
6. Set the park brake and check to be sure it is adjusted properly.
7. Release the park brake and test drive the vehicle.

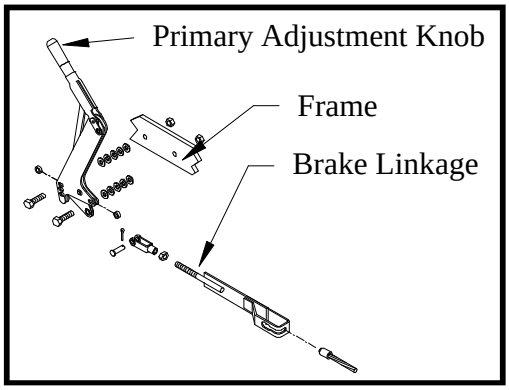

Secondary Adjustment (cable)

⚠WARNING

1. Make sure the ignition switch is "OFF", then remove the key.
2. Place the shift lever in park.
3. Set the park brake.
4. Place blocks under the front wheels to prevent vehicle movement.
5. Disconnect the negative ground cable from the battery.

6. Release the park brake.
7. Rotate the knob on the parking brake handle couterclockwise until it stops.
8. Loosen the park brake cable clevis jam nut at the equalizer.
9. Adjust the cable to remove all slack from the linkages.
10. Tighten the jam nut.
11. Perform the Primary Adjustment Procedure.

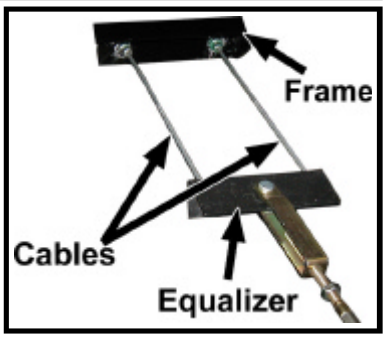

K60 shown

CHECK MASTER CYLINDER FLUID

⚠WARNING

Do not ingest brake fluid or allow contact with skin or eyes. Always wear protective clothing and a face shield when working with or around brake fluid.

SKIN CONTACT

Flush area immediately with water for several minutes. If a rash or skin irritation develops, get medical attention immediately.

EYE CONTACT

Immediately flush the eye with water for 15 minutes and call physician.

INGESTION

Get medical attention immediately.

⚠WARNING

1. **Make sure the ignition switch is "OFF", then remove the key.**
2. **Place the shift lever in park.**
3. **Set the park brake.**
4. **Place blocks under the front wheels to prevent vehicle movement.**
5. **Disconnect the negative ground cable from the battery.**

6. Thoroughly clean the area around the master cylinder cap.
7. Remove the master cylinder cap.
8. If the fluid in the master cylinder is contaminated then the entire brake system must be flushed. Refer to ***Bleed the Brakes*** for information regarding flushing the brake system.
9. Fill with brake fluid from a new sealed container to within 1/4-inch of the top of the master cylinder chamber and reinstall the cap.
10. Reconnect the main positive and negative cables at the batteries.
11. Remove blocks from behind the wheels.
12. Release the parking brake and test drive the vehicle.

⚠WARNING

- **Only use DOT 3 brake fluid from a new sealed container.**
- **DOT 3 brake fluid is corrosive and will damage paint finishes.**
- **Dispose of brake fluid in accordance with local state and federal regulations.**
- **Read and follow all warnings on the brake fluid container.**

BLEED THE BRAKE SYSTEM

⚠WARNING

Do not ingest brake fluid or allow contact with skin or eyes. Always wear protective clothing and a face shield when working with or around brake fluid.

SKIN CONTACT

Flush area immediately with water for several minutes. If a rash or skin irritation develops, get medical attention immediately.

EYE CONTACT

Immediately flush the eye with water for 15 minutes and call physician.

INGESTION

Get medical attention immediately.

NOTE: Start this procedure at the wheel furthest from the master cylinder, then work toward the wheel closest to the master cylinder.

⚠WARNING

1. **Make sure the ignition switch is "OFF", then remove the key.**
2. **Place the shift lever in park.**
3. **Set the park brake.**
4. **Place blocks under the front wheels to prevent vehicle movement.**
5. **Disconnect the negative ground cable from the battery.**

6. Thoroughly clean the area around the master cylinder cap and remove the cap.

7. Add brake fluid from a new sealed container to the master cylinder. Fill to 1/4” from the top of the master cylinder chamber.

⚠WARNING

- **Only use DOT 3 brake fluid from a new sealed container.**
- **DOT 3 brake fluid is corrosive and will damage paint finishes.**
- **Dispose of brake fluid in accordance with local state and federal regulations.**
- **Read and follow all warnings on the brake fluid container.**

8. The master cylinder fluid level will drop as the brakes are bled. Periodically check and fill the master cylinder during this procedure. Do not allow the fluid level in the master cylinder to drop too low as this will allow air into the brake lines.
9. Attach a clear hose to the bleeder valve on the brake cylinder that is to be bled. Route the hose into a clear container for waste brake fluid.
10. Pump the brake pedal a few times and then press and hold light pressure to the brake pedal.
11. Open the bleeder valve on the hydraulic brake body.
12. Depress the foot pedal to the floor and then close the bleeder valve. Do not release pressure on the brake pedal until the bleeder valve is closed.
13. Slowly release the foot pedal, allowing it to return to its released position.

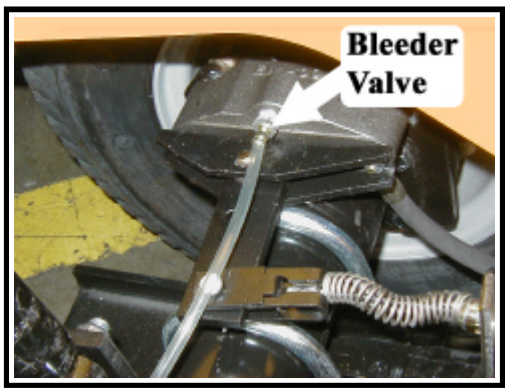

Bleeder valve with hose attached

NOTE: Check and fill the master cylinder frequently during the bleeding process. Do not allow the fluid level in the master cylinder to drop low enough to allow air to enter the brake lines. If air enters the brake lines during the bleeding process, then you will have to start again from the beginning.

⚠WARNING

Always use brake fluid from a new sealed container. Never reuse any brake fluid that has been removed from the brake system. Use of contaminated brake fluid will degrade the braking performance and may cause property damage or severe bodily injury.

14. Repeat the above steps until you are sure that all of the air is expelled from the brake line. Any air bubbles that can be seen in the clear hose attached to the bleeder is an indication that there is still air in the brake lines.
15. Repeat this process with each of the other wheels.

    NOTE: When finished, top off the master cylinder with fluid. See **Check Master Cylinder Fluid** *for information on filling the master cylinder.*

16. Reconnect the main positive and negative cables at the batteries.
17. Remove the blocks from behind the wheels.
18. Release the park brake and test drive the vehicle.

FLUSH THE BRAKE SYSTEM

⚠WARNING

1. Make sure the ignition switch is "OFF", then remove the key.
2. Place the shift lever in park.
3. Set the park brake.
4. Place blocks under the front wheels to prevent vehicle movement.
5. Disconnect the negative ground cable from the battery.

6. Raise the rear wheels off of the ground and support with jack stands.

⚠WARNING

Always use a lifting strap, hoist, and jack stands, of adequate capacity to lift and support the vehicle. Failure to use lifting and support devices of rated load capacity may result in severe bodily injury.

7. If equipped with front brakes, raise the front wheels off of the ground and support with jack stands.
8. Release the park brake.
9. Remove both rear wheels and, if equipped with front brakes, the front wheels. Refer to ***Tires and Wheels*** section for information regarding removing the wheels.
10. Remove the wheel cylinders from each axle. Refer to ***Replace the Wheel Cylinder*** section for information regarding removing the wheel cylinder.
11. Attach a clear hose to the bleeder valve on each of the wheel cylinders and route the hoses into a container for waste brake fluid.
12. Position the wheel cylinders so that the bleeder screw is pointing to the ground and open all bleeder screws.
13. Pump the master cylinder until all fluid has been pumped from the brake lines and all wheel cylinders.
14. Close all bleeder screws.
15. Fill the master cylinder with fluid.
16. Open one of the bleeder screws and pump the master cylinder until all fluid has been pumped from the master cylinder and close the bleeder screw.
17. Repeat the above two steps for each wheel cylinder.
18. Reinstall the wheel cylinders and bleed the brakes. Refer to ***Bleed the Brakes*** for information regarding bleeding the brakes.
19. Set the park brake.
20. Install the wheels and lower the vehicle to the ground.
21. Reconnect the main positive and negative cables at the batteries.
22. Release the park brake and test drive the vehicle.

REPLACE FRONT DISC BRAKE PADS

NOTE: It is recommended that both the left and right brake pads be replaced as a set.

⚠WARNING

Current Taylor-Dunn® brakes are asbestos free. However, there is the possibility that the original brakes were replaced with aftermarket parts containing asbestos. Since this possibility exists, all brake parts should be handled as if they contain asbestos. Refer to appendix C for recommended handling precautions.

NOTE: Installing new brake pads will raise the brake fluid level in the master cylinder.

⚠WARNING

1. **Make sure the ignition switch is "OFF", then remove the key.**
2. **Place the shift lever in park.**
3. **Set the park brake.**
4. **Place blocks under the rear wheels to prevent vehicle movement.**
5. **Disconnect the negative ground cable from the battery.**

6. Thoroughly clean the area around the master cylinder cap.
7. Remove fluid from the master cylinder until it is 1/2 full.

8. Raise the front of the vehicle and support with jack stands.

⚠WARNING

Always use a lifting strap, hoist, and jack stands, of adequate capacity to lift and support the vehicle. Failure to use lifting and support devices of rated load capacity may result in severe bodily injury.

9. Remove the tire/wheel assembly. Refer to ***Tires and Wheels*** section for information on removing the tire and wheel assembly.

10. Remove the two bolts holding the brake caliper assembly to the steering knuckle and remove the caliper assembly from the rotor. Do not allow the caliper assembly or brake body to hang from the brake hose.
11. Slide the hydraulic brake body off of the mounting bracket and remove the brake pads.
12. Place a steel plate across the brake body pistons and using two c-clamps, carefully press the pistons back into the housing.
13. Place the new brake pads onto the brake body and slide the mounting bracket in place making sure that the mounting bracket engages the slots on the brake pads.
14. Install the caliper assembly back onto the steering knuckle.
15. Fill the master cylinder to the proper level and depress the brake pedal a few times to fill up the brake bodies.

    NOTE: Make sure the fluid level does not drop below approximately 1/2 full. If air enters the brake lines, then the you will need to bleed the system. Refer to **Bleed the Brake System** *for information regarding bleeding the brakes.*

16. Check the fluid in the master cylinder and fill to the proper level.
17. Install the wheels and lower the vehicle to the ground.
18. Reconnect the main positive and negative cables at the batteries.
19. Release the park brake and test drive the vehicle.

REPLACE REAR BRAKE PADS OR SHOES

⚠WARNING

Current Taylor-Dunn® brakes are asbestos free. However, there is the possibility that the original brakes were replaced with aftermarket parts containing asbestos. Since this possibility exists, all brake parts should be handled as if they contain asbestos. Refer to Appendix C for recommended handling precautions.

⚠WARNING

1. **Make sure the ignition switch is "OFF", then remove the key.**
2. **Place the shift lever in park.**
3. **Set the park brake.**
4. **Place blocks under the front wheels to prevent vehicle movement.**
5. **Disconnect the negative ground cable from the battery.**

6. Raise the rear of the vehicle and support with jack stands.

⚠WARNING

Always use a lifting strap, hoist, and jack stands, of adequate capacity to lift and support the vehicle. Failure to use lifting and support devices of rated load capacity may result in severe bodily injury.

7. Remove the brake drum. Refer to ***Transmission*** section for information regarding removing the brake drum.
8. Disconnect the auto-adjust lever from the brake shoe.

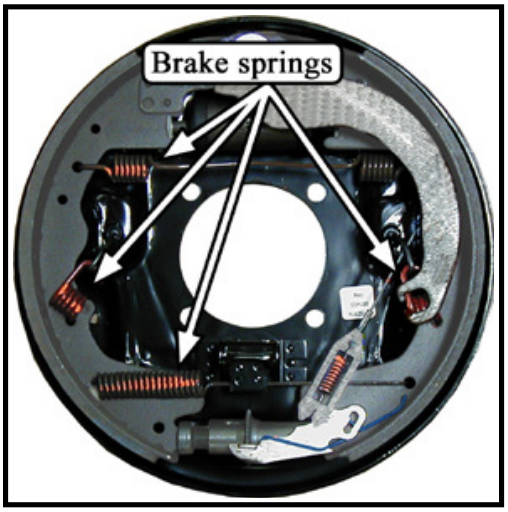

K60 shown, refer to Parts Section for illustration of K45

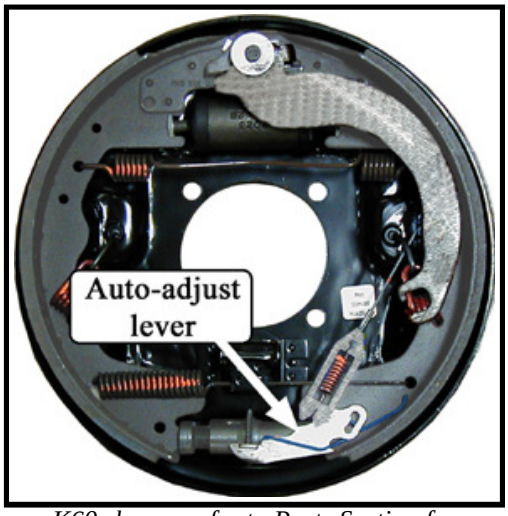

K60 shown, refer to Parts Section for illustration of K45

9. Remove the upper and lower return springs and brake shoe retaining springs.

10. Remove the brake shoes.
11. Remove and thoroughly clean the adjustor assembly.
12. Lightly lubricate the adjustor screw threads with high temperature grease and install the adjustor screw all of the way into the adjustor nut.

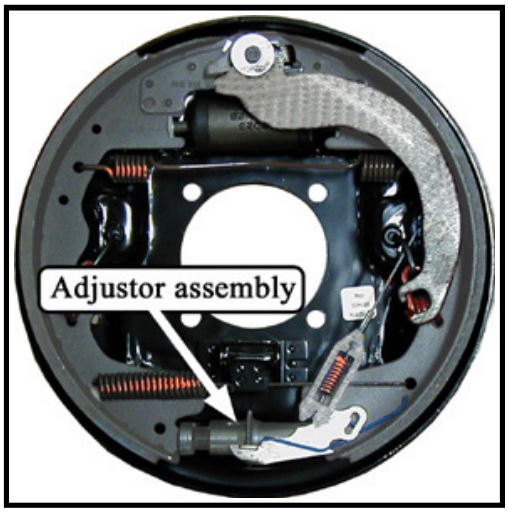

K60 shown, refer to Parts Section for illustration of K45

⚠WARNING

Do not allow grease to contact any of the braking surfaces. If any braking surface is contaminated with grease, it may cause the brakes to fail resulting in property damage and/or

13. Install in reverse order.
    a. Before installing the brake drum, inspect the auto-adjust mechanism for proper operation.
    b. Inspect the brake drum. Refer to ***Inspect the Service Brake*** section for information regarding inspecting the brake drum.
14. Adjust the brakes. Refer to ***Rear Brake Drum Adjustments*** section for information regarding adjusting the brakes.
15. Lower the vehicle.
16. Reconnect the main positive and negative at the batteries.
17. Remove the blocks from behind the wheels.
18. Test drive the vehicle.

REPLACE THE MASTER CYLINDER

⚠WARNING

Do not ingest brake fluid or allow contact with skin or eyes. Always wear protective clothing and a face shield when working with or around brake fluid.

SKIN CONTACT

Flush area immediately with water for several minutes. If a rash or skin irritation develops, get medical attention immediately.

EYE CONTACT

Immediately flush the eye with water for 15 minutes and call physician.

INGESTION

Get medical attention immediately.

⚠WARNING

1. Make sure the ignition switch is "OFF", then remove the key.

2. Place the shift lever in park.

3. Set the park brake.

4. Place blocks under the front wheels to prevent vehicle movement.

5. Disconnect the negative ground cable from the battery.

NOTE: Most vehicle configurations do not require lifting the vehicle to remove the master cylinder. Lifting the vehicle may not be required.

6. If required, raise the vehicle and support with jack stands.
7. Place a drain pan under the master cylinder.
8. Disconnect the brake line(s) to the master cylinder and pump out the fluid in the master cylinder by depressing the pedal several times.
9. Remove the master cylinder bolts and remove the master cylinder from the vehicle.
10. Install in reverse order.
11. Fill the master cylinder with brake fluid from a sealed container.
12. Pump the brake pedal a short distance of one to two inches until no bubbles are seen coming from the inlet ports inside of the master cylinder chamber.
13. If the vehicle was raised, lower it to the ground.
14. Bleed the brakes. refer to ***Bleed the Brakes*** section for information regarding bleeding the brakes.
15. Reconnect the main positive and negative cables at the batteries.
16. Remove the blocks from behind the wheels.
17. Release the park brake and test drive the vehicle.

TAYLOR - DUNN

Engine Service

The engine service and repair information is located in a supplemental manual part number M7-001-20CD which was supplied with your vehicle.

An electronic version of the engine manual is inculded on the CD.

If you do not have this manual, it can be obtained through your local Taylor-Dunn® dealer.

Transmission Service

The transmission service and repair information is located in a supplemental manual part number M7-001-21 which was supplied with your vehicle.

An electronic version of the transmission manual is inculded on the CD.

If you do not have this manual, it can be obtained through your local Taylor-Dunn® dealer.

Rear Axle Assembly Service

TABLE OF CONTENTS

CHECK OIL LEVEL

⚠WARNING

1. Make sure the ignition switch is "OFF", then remove the key.
2. Place the shift lever in park.
3. Set the park brake.
4. Place blocks under the front wheels to prevent vehicle movement.
5. Disconnect the negative ground cable from the battery.

NOTE: The fill plug on 3rd member housing is also the level plug.

6. Remove the fill plug on the 3rd member housing.
7. The oil level should be at the bottom of the hole threads. Fill as required.
8. Reconnect the battery and remove the blocks from the wheels.
9. Test drive.

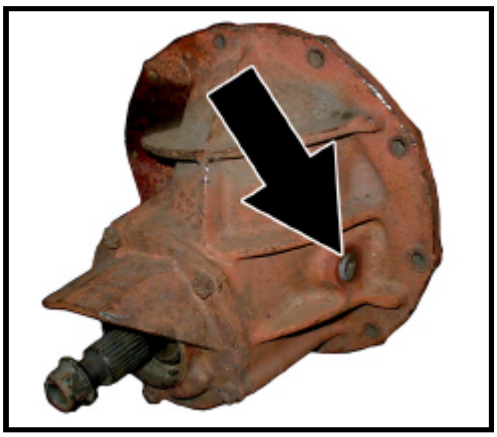

Fill/level plug on 3rd member

CHANGE AXLE OIL

The 3rd member must be removed to change the rear axle oil. Refer to Dissassemble and Repair for information regarding removing the 3rd member.

DISASSEMBLY AND REPAIR

Disassemble

NOTE: Bearings and races must be replaced as a set. If any one bearing or race is worn, its mate must also be replaced. It is recommended to replace all bearings and races in the 3rd member as a set.

1. Remove the rear axle assembly from the vehicle. Refer to ***Rear Axle Assembly: Remove and Install*** for information regarding removing the rear axle assembly.
2. Place the assembly on a suitable work srface with the 3rd member facing “UP” and the axle shafts level.
3. Remove the left and right axles.
4. Remove the chain case and backing plate from the 3rd member. Refer to section ***Chain Case: Disassemble*** for information regarding removing the chain case.
5. Remove the nuts holding the 3rd member to the axle housing and remove the 3rd member from the housing.
6. Install a spacer on the pinion shaft so that the pinion nut can be installed and tightened.
7. While rotating the pinion shaft, tighten the pinion nut to 100 ft-lbs.
8. Measure and record the ring and pinion gear backlash. This setting will be used during reassembly.
9. Remove the pinion housing and pinion gear from the 3rd member.

   NOTE: Do not lose the spacers and shims in the pinion housing or the pinion housing shim(s).

10. If required, remove the rear tapered bearing from the pinion shaft and discard.

    NOTE: Do not remove bearings or races unless they requires replacement. Removing pressed bearings or races will damage the bearing or race. Replacing this bearing will require re-shimming of the pinion shaft.

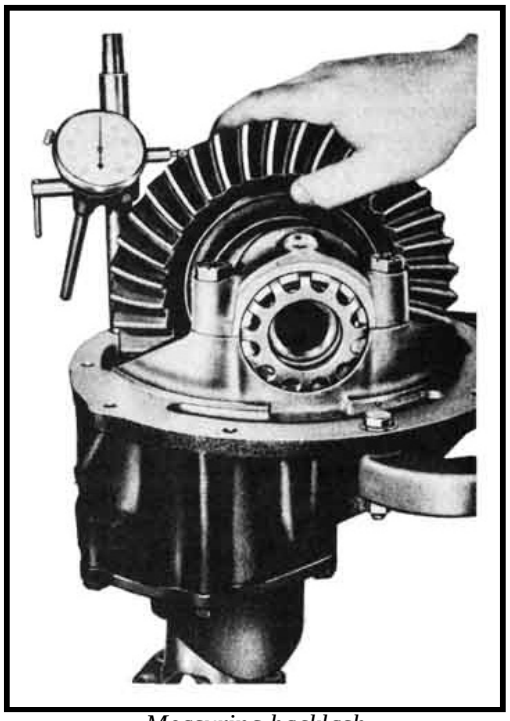

Measuring backlash

11. If required, remove the bearing races from the pinion housing.
12. If required, remove the rear pinion pilot bearing.
13. Mark the differential bearing caps and 3rd member housing so that they can be reassembled in their original location. Refer to illustration at end of section.

    NOTE: The caps cannot be interchanged or replaced. If the caps are lost or damaged then the entire 3rd member assembly must be replaced.

14. Remove the differential bearing caps, bearing adjusting nuts and races.

15. Remove the differential assembly from the 3rd member. If required drain the oil from the housing.
16. Mark the ring gear and differential housing so that the ring gear can be reinstalled in the same orientation.
17. Remove the bearings from the differential housing and discard.

    NOTE: Removing the bearings will damage the bearings. Do not remove the bearings unless they require replacement.

18. Remove the ring gear from the differential housing.
19. Remove the differential shaft locking roll pin.
20. Split the 2-piece differential housing.
21. Drive the differential pinion shaft out of the housing with a brass drift punch.
22. Remove the differential gears, axle gears, and thrust washers.

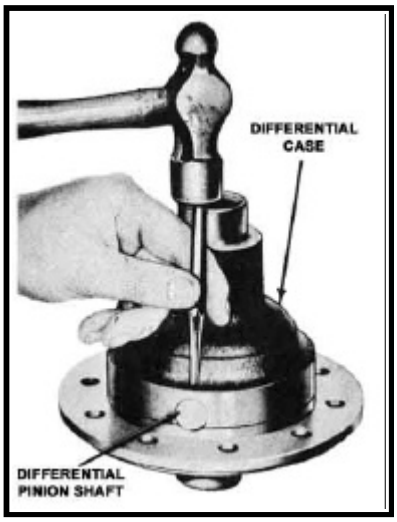

Assemble

NOTE: Thoroughly clean and inspect all parts before reassembly. Apply a small amount of differential oil to all gears and bearings before reassembly.

NOTE: If the ring and pinion gear set is to be replaced then the shims for the pinion housing may have to be adjusted. Refer to section **Selecting the Pinion Housing Shim** *for information on adjusting the shim.*

NOTE: Most of our gear sets are non-hunting or semi-hunting gears. With this type of gear the pinion and ring gears must be aligned correctly. There will be two teeth marked on the ring gear and one tooth marked on the pinion gear. The one tooth on the pinion gear must be installed so that it is between the two teeth on the ring gear. The gear ratios are; 2.50, 2.70, 2.75, 3.25 and 3.00.

Pinion housing

1. If the rear pinion bearing was removed, install a new bearing.
2. Install the bearing races into the pinion housing.
3. Place the pinion gear into the 3rd member.
4. Install the pinion housing onto the 3rd member.
5. Install the pinion bearing spacers, shims and front bearing.
6. Install a spacer on the pinion shaft so that the pinion nut can be installed and tightened.
7. While rotating the pinion shaft, tighten the pinion nut to 100 ft-lbs.
8. Check the torque required to rotate the shaft. If the torque is not between 6 -10 in-lbs. then the bearings must be re-shimmed. Add or subtract shims as required until the torque is within specifications.

Differential Assembly

9. Reassemble the differential housing in reverse order.
10. Place the ring gear onto the differential housing matching the mark made during disassembly.
11. Install two of the ring gear bolts finger tight to align the gear.
12. Press the ring gear onto the differential housing.
13. Install the ring gear bolts and cross tighten to 65-80 ft-lbs.
14. If the differential or pinion pilot bearings were removed, install new bearings.
15. Place races onto the differential bearings and place the differential assembly onto the 3rd member. Position the assembly so that it is just touching the pinion gear.
16. Install the bearing adjusting nuts making sure that the nuts are not cross threaded. Position the nuts so they are in contact with the bearing races.

⚠CAUTION

Cross threading the adjusting nuts nuts will damage the 3rd member housing and bearing caps. If the housing and/or nuts are damaged, the entire 3rd member assembly will have to be replaced.

17. Install the bearing caps in their original locations and torque the bolts to 12-15 ft-lbs. making sure that the adjusting nuts still turn freely.

NOTE: In the following procedure, "Left adjusting nut" refers to the nut on the ring gear side of the differential assembly. "Right adjusting nut" refers to the nut on the pinion gear side of the differential assembly.

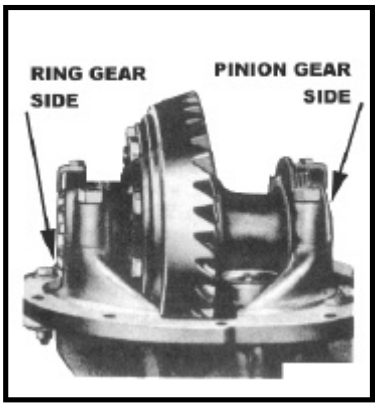

The differential bearing preload is set by measuring the case spread of the 3rd member housing. As the bearing adjusting nuts are tightened, the two differential bearing caps will be pushed (spread) away from each other. A dial indicator must be used to measure the case spread as the nuts are tightened. Mount the dial indicator so that it is 4 inches above the top of the bearing caps and parallel to the center line of the carrier bearings.

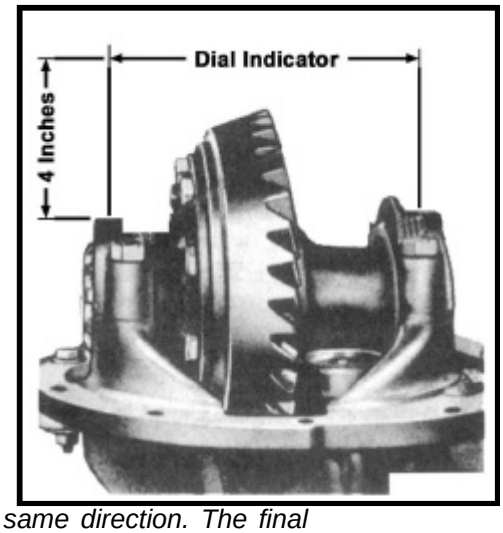

NOTE: Be sure to continually rotate the ring gear while adjusting the bearings. This makes sure that the bearings and races remain seated correctly.

NOTE: One hole on adjusting nut = approximately 0.003" change in backlash. Left and right nuts MUST be turned the same amount AND in the same direction. The final direction of rotation MUST be in the tightening direction, to loosen a nut 1-hole, back off 2-holes and then tighten 1 hole. The ring gear should be rotated any time the nuts are being adjusted.

18. Loosen the right side nut.
19. Tighten the left nut until all backlash is removed from the ring and pinion gear.
20. Tighten the right nut until a case spread of 0.010” is indicated on the dial indicator.

    NOTE: If new ring and pinion gears are used, refer to the recommended backlash that is supplied with the gear set

21. Measure the backlash. If the backlash is not within 0.002” of the original measurement taken on disassembly or the recommended setting for new gears, then readjust the bearings as follows:

RE-SHIMMING THE PINION HOUSING

The pinion housing shim may require replacement if the ring and pinion gear or pinion housing is replaced.

Pinion housing shims are available from 0.005” to 0.021” in increments of 0.001”. Locate the number printed on the flat surface of the pilot bearing shaft of the pinion gear. It should be a number ranging from -5 to +5. This is the amount in 0.001” increments to add to the “standard” shim. For example, if the number on the shaft is ‘-3’ then the standard shim (0.015) plus ‘-3’ equals 0.012. The correct shim would be 0.012”.

If you cannot locate the number on the shaft, start with the standard shim and adjust as required per the contact pattern chart below.

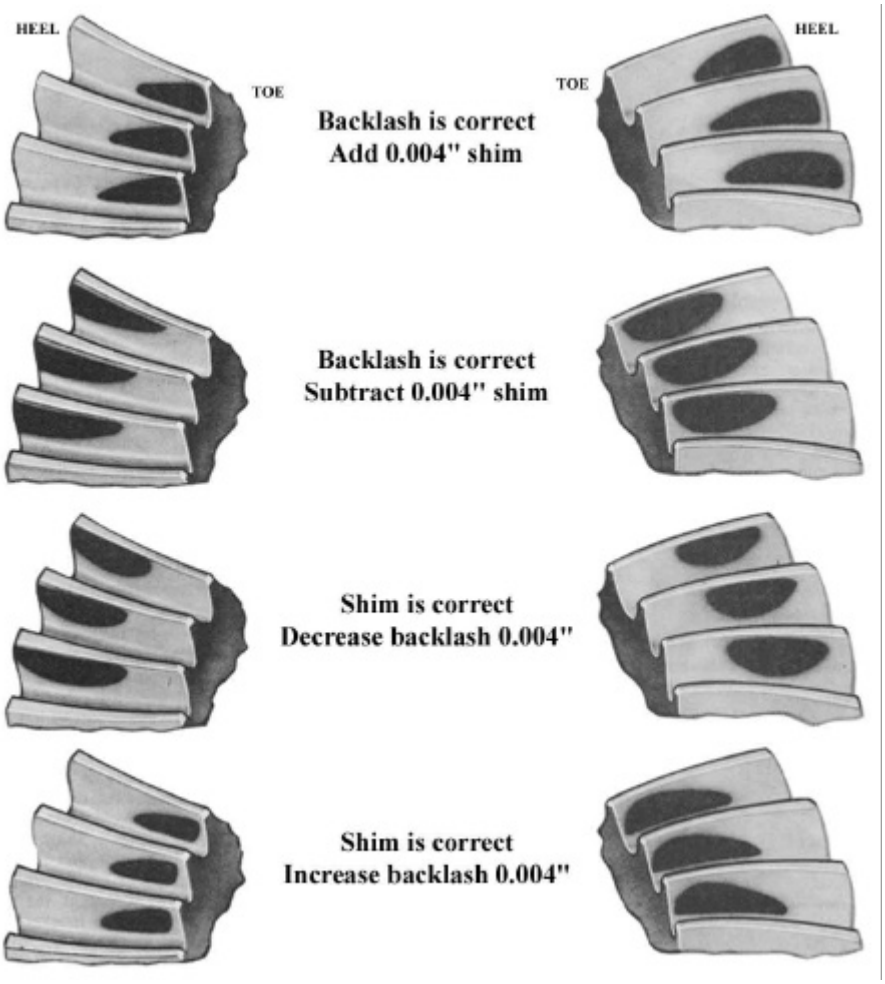

REAR AXLE ASSEMBLY EXPLODED VIEW

REAR AXLE ASSEMBLY

Removal

⚠WARNING

1. Make sure the ignition switch is "OFF", then remove the key.
2. Place the shift lever in park.
3. Set the park brake.
4. Place blocks under the front wheels to prevent vehicle movement.
5. Disconnect the negative ground cable from the battery.

6. Remove the two u-bolts holding the drive shaft universal joint to the yoke on the pinion shaft and tie the shaft up out of the way.
7. Disconnect the brake hose from the t-fitting.
8. Disconnect both parking brake cables from the equalizer and frame.
9. Remove the nuts only from the lower spring hanger bolts and the front spring mounting bolts.

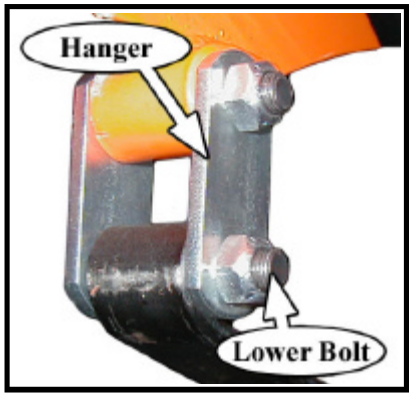

⚠WARNING

Always use a lifting strap, hoist, and jack stands, of adequate capacity to lift and support the vehicle. Failure to use lifting and support devices of rated load capacity may result in severe bodily injury.

10. Raise the rear of the vehicle just high enough to remove the lower spring hanger bolts and remove the bolts.
11. Raise the rear of the vehicle approximately 8" and support the frame with jack stands.
12. Remove the front spring bolts and roll the rear axle assembly out from under the frame.

Installation

Install the axle in reverse order.

Bleed the brake system. Refer to ***Bleed the Brakes*** section for information regarding bleeding the brakes.

TAYLOR - DUNN

Suspension

TABLE OF CONTENTS

REPLACE THE REAR SPRINGS

Leaf (elliptical)

If a spring has failed or is fatigued, then it is recommended that both rear springs are replaced as a set.

HINT : In most vehicles it will be easier if the springs are replaced one at a time.

⚠WARNING

1. Make sure the ignition switch is "OFF", then remove the key.
2. Place the shift lever in park.
3. Set the park brake.
4. Place blocks under the front wheels to prevent vehicle movement.
5. Disconnect the negative ground cable from the battery.

6. Raise the rear of the vehicle and support with jack stands.

⚠WARNING

Always use a lifting strap, hoist, and jack stands, of adequate capacity to lift and support the vehicle. Failure to use lifting and support devices of rated load capacity may result in severe bodily injury.

7. Tie up or support the rear axle so it cannot fall out of the vehicle.
8. Remove the nuts from the u-bolts holding the spring to the axle tube.
9. Support the spring so that it cannot fall out of the vehicle.
10. Remove the lower bolt from the spring hanger.
11. Remove the spring bolt from the other end of the spring and remove the spring from the vehicle.
12. Inspect the spring bolts and spring hangers for signs of wear or damage. If any wear or damage is found, then they must be replaced.
13. Install the new spring in reverse order.
14. If the spring hanger bolts do not have a grease fitting, lube the spring bushings before installing the spring.
15. Torque the spring hanger bolts to 20 ft-lbs.
16. Lower the vehicle.
17. Reconnect the main positive and negative cables at the batteries.
18. Remove the blocks from behind the wheels.
19. Release the parking brake and test drive the vehicle

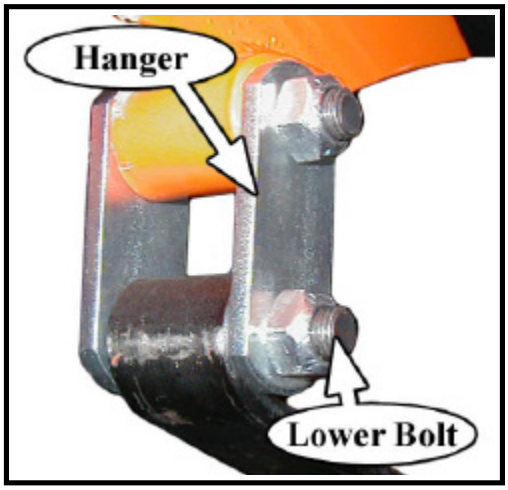

Typical Spring hanger

⚠WARNING

Damaged or worn spring bolts or hangers could result in sudden failure of the suspension causing severe bodily injury or property damage.

REPLACE THE FRONT SPRINGS

Leaf (elliptical)

If a spring has failed or is fatigued, then it is recommended that both front springs are replaced as a set.

HINT : In most vehicles it will be easier if the springs are replaced one at a time.

⚠WARNING

1. Make sure the ignition switch is "OFF", then remove the key.
2. Place the shift lever in park.
3. Set the park brake.
4. Place blocks under the front wheels to prevent vehicle movement.
5. Disconnect the negative ground cable from the battery.

6. Raise the front of the vehicle and support with jack stands.

⚠WARNING

Always use a lifting strap, hoist, and jack stands, of adequate capacity to lift and support the vehicle. Failure to use lifting and support devices of rated load capacity may result in severe bodily injury.

7. Tie up or support the front axle so it cannot fall out of the vehicle.
8. Unbolt the spring from the front axle beam.
9. Support the spring so that it cannot fall out of the vehicle.
10. Remove the lower bolt from the spring hanger.
11. Remove the spring bolt from the other end of the spring and remove the spring from the vehicle.
12. Inspect the spring bolts and spring hangers for signs of wear or damage. If any wear or damage is found, then they must be replaced.

⚠WARNING

Damaged or worn spring bolts or hangers could result in sudden failure of the suspension causing severe bodily injury or property damage.

13. Install the new spring in reverse order.
14. If the spring hanger bolts do not have a grease fitting, lube the spring bushings before installing the spring.
15. Torque the spring hanger bolts to 20 ft-lbs.
16. If the spring bolts are equipped with grease fittings, lube them at this time.
17. Lower the vehicle.
18. Reconnect the main positive and negative cables at the batteries.
19. Remove the blocks from behind the wheels.
20. Release the parking brake and test drive the vehicle.

REPLACE THE SPRING BUSHINGS

It is recommended that all front spring bushings are replaced as a set.

Your vehicle will be equipped with one of two types of spring bushings, internal and external (see illustration to the right):

- The internal bushing is a plastic insert that is pressed into the spring eye. There are one of these bushings for each spring eye.
- The external bushing consists of two plastic bushings on each end of the spring eye.
- Refer to the parts list to identify the bushings used in your vehicle.

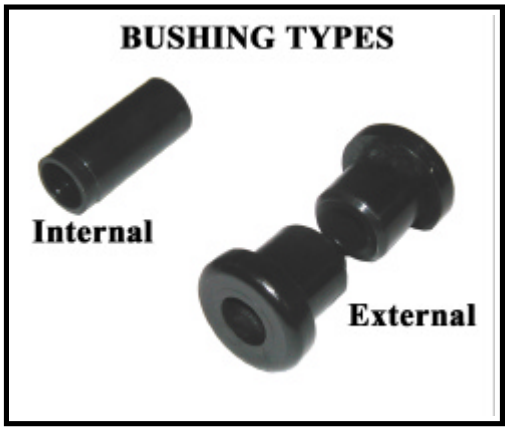

⚠WARNING

1. Make sure the ignition switch is "OFF", then remove the key.
2. Place the shift lever in park.
3. Set the park brake.
4. Place blocks under the front wheels to prevent vehicle movement.
5. Disconnect the negative ground cable from the battery.

6. Raise the front or rear of the vehicle depending on which spring is to be removed and support with jack stands.

⚠WARNING

Always use a lifting strap, hoist, and jack stands, of adequate capacity to lift and support the vehicle. Failure to use lifting and support devices of rated load capacity may result in severe bodily

7. Remove the spring from the vehicle.
   NOTE: Refer to **Replace the Front Springs** *section for information regarding removing the front springs.*
8. Remove the spring hanger bolts from the frame.
9. Remove the spring bushing(s):
   - For internal bushing, press the spring bushings out of the two spring eyes and from the mounting eye on the vehicles frame.
   - For external bushing, Remove the bushings from the spring eye.
10. Install the new bushings in reverse order.
    HINT: Apply a light coating of grease to the bushing before pressing into the spring eye.

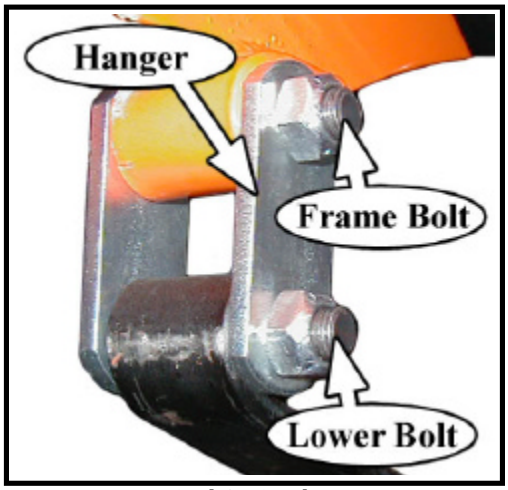

Typical Spring hanger

11. Install the spring onto the vehicle.
    NOTE: Refer to **Replace the Front Springs** *section for information regarding installing the front springs.*

Tires and Wheels

TABLE OF CONTENTS

TIRE INFLATION

⚠WARNING

1. **Make sure the ignition switch is "OFF", then remove the key.**
2. **Place the shift lever in park.**
3. **Set the park brake.**
4. **Place blocks under the front wheels to prevent vehicle movement.**
5. **Disconnect the negative ground cable from the battery.**

There are many tire options available with varying tire pressures. Refer to the side wall of your tire for information regarding the tire pressure for your tires.

The illustration to the right is an example of the side wall information on a tire.

Tire pressures must be checked when the tire is cold.

TIRE INSPECTION

⚠WARNING

1. **Make sure the ignition switch is "OFF", then remove the key.**
2. **Place the shift lever in park.**
3. **Set the park brake.**
4. **Place blocks under the front wheels to prevent vehicle movement.**
5. **Disconnect the negative ground cable from the battery.**

6. Check the tire pressure. Refer to ***Tire Inflation*** section for information on checking the tire pressure.
7. Inspect the tire tread depth. Minimum recommended tread depth is 1/16-inch. There are a series of tread depth wear indicators around the circumference of the tire. They will appear as 1/2-inch bands across the tread as the tire approaches its wear limit (see illustration to the right). Replace the tire if any tread depth indicator can be seen or any part of the tread depth is 1/16-inch or less. Refer to ***Replace the Tire*** section for information regarding replacing the tire.

8. Inspect for uneven tire wear on the front tires. Uneven tire wear could be a result of an improperly inflated tire or a misaligned or damaged front end.
   NOTE: Refer to **Tire Inflation** *section or* **Steering Component Service** *section for information on proper tire inflation or front end wheel alignment.*
9. Inspect the inner and outer side walls for cracks. If any cracks are seen, then the tire should be replaced. Refer to ***Replace the Tire*** section for information regarding replacing the tire.
10. Inspect the valve stem for cracks. If any cracks are seen, then the valve stem should be replaced. It is also recommended that the valve stem be replaced whenever the tire is replaced.
    NOTE: Refer to **Replace the Tire** *section for information regarding replacing the valve stem.*
11. Inspect the tread and side walls for debris in the rubber that could lead to a puncture. If any debris is found it should be removed and the tire inspected for a leak.

REPLACE THE TIRE/WHEEL

⚠WARNING

1. Make sure the ignition switch is "OFF", then remove the key.
2. Place the shift lever in park.
3. Set the park brake.
4. Place blocks under the front wheels to prevent vehicle movement.
5. Disconnect the negative ground cable from the battery.

6. Raise the wheel to be replaced off of the ground and support with jack stands.
7. Remove the 4 or 5 wheel nuts and remove the wheel.
8. Install in reverse order.
9. Following the pattern shown on the following page, cross tighten the wheel nuts in two stages as follows:
   1st stage to approximately 20 ft-lbs.
   2nd stage to 80-90 ft-lbs.
10. Reconnect the main positive and negative cables at the batteries.
11. Lower the wheel to the ground.
12. Remove the blocks from behind the wheels.
13. Release the parking brake and test drive the vehicle.

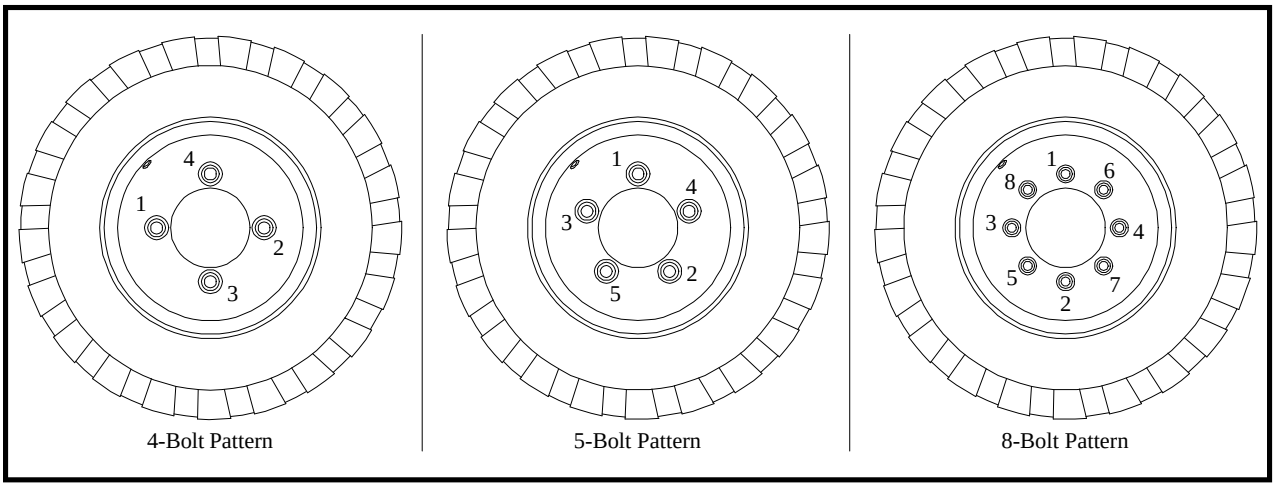

Pattern for tightening the wheel nuts

⚠WARNING

Re-torque all wheel nuts to their final value after 1-week (20-hours) of operation. Failure to re-torque the wheel nuts may result in the wheel coming off of the vehicle causing severe bodily injury and/or property damage.

REPAIR THE TIRE (PNEUMATIC)

⚠WARNING

Do not attempt to repair a tire with a damaged side wall or a slice in the tread. This type of repair could fail prematurely resulting in severe bodily injury and/or property damage.

NOTE: To properly repair a puncture, the tire must be removed from the wheel. Refer to **Replace the Tire** *section for information on removing the tire from the wheel.*

It is recommended to repair a tire with a combination vulcanized plug and internal patch.

Tire repairs should only be performed by personnel trained in tire repair.

The tire repair procedure will be unique to the type of repair equipment or repair components used. Refer to the instructions provided with your equipment or repair components.

REPLACE THE TIRE (PNEUMATIC)

NOTE; To replace the tire, the tire/wheel assembly must be removed from the vehicle. Refer to **Replace the Tire/Wheel** *section for information on removing the tire/wheel assembly.*

⚠WARNING

Explosion Hazard. Fully deflate the tire before attempting to remove the tire from the wheel. Do not over inflate the tire when seating the bead. Failure to deflate the tire or over inflating the tire to seat the bead may cause explosive failure of the tire resulting in severe bodily injury or death.

Tire replacement should only be performed by personnel trained in tire replacement.

The tire replacement procedure will be unique to the type of replacement equipment being used. Refer to the instructions provided with your equipment.

Always use a new valve stem when replacing a tire.

1. Remove the tire from the wheel.
2. Cut the old valve stem off of the wheel.
3. Remove the valve stem cap from the new valve stem.
4. Lubricate the valve stem with liquid soap.
5. Install a new valve stem using a valve stem tool.
   NOTE: The valve stem tool is available at most auto repair shops.
6. Install the tire onto the wheel following the instructions provided with your tire replacement equipment.
7. Inflate the tire to the proper pressure and check for leaks.
8. Install the valve stem cap.

TAYLOR - DUNN

Battery Service

TABLE OF CONTENTS

CLEANING

⚠WARNING

Explosive mixtures of Hydrogen gas are present within battery cells at all times. Do not work with or charge battery in an area where open flames (including gas furnace or water heater pilots), sparks, cigarettes, or any other sources of combustion are present. Always provide ample ventilation in rooms where batteries are being charged. Failure to do so may result in severe bodily injury and/or property damage.

⚠WARNING

Battery electrolyte is poisonous and dangerous. It contains sulfuric acid. Avoid contact with skin eyes or clothing. Wear rubber gloves and safety glasses while servicing batteries. DO NOT INGEST! This may result in severe bodily injury.

⚠WARNING

A battery is a live electrical source. It cannot be disconnected or neutralized. Do not drop any tool or conductive object onto the battery. A conductive object that comes in contact with the battery terminals will initiate a short circuit of the battery. This could cause the battery to explode resulting in severe bodily injury and/or property damage.

⚠CAUTION

Battery electrolyte will stain and corrode most surfaces. Immediately and thoroughly clean any surface outside of the battery that the battery electrolyte comes in contact with. Failure to clean may result in property damage.

⚠WARNING

1. **Make sure the ignition switch is "OFF", then remove the key.**
2. **Place the shift lever in park.**
3. **Set the park brake.**
4. **Place blocks under the front wheels to prevent vehicle movement.**
5. **Disconnect the negative ground cable from the battery.**

6. Dry dirt can be readily blown off with low-pressure air or brushed off.
7. Wetness or wet dirt on the battery indicates battery acid. Using a nonmetallic brush with flexible bristles, wash the battery off with a strong solution of baking soda and hot water (1 lb. of soda to a gallon of water). Continue until all fizzing stops, which indicates that the acid has been neutralized. Then rinse thoroughly with clear water. DO NOT get any of the solution into the battery cells.
8. Reconnect the battery, remove the blocks from the wheels and test drive.

TESTING

NOTE: A combination of the Load Test and Specific Gravity Test should be used to accurately determine the condition of the battery.

⚠WARNING

Explosive mixtures of Hydrogen gas are present within battery cells at all times. Do not work with or charge battery in an area where open flames (including gas furnace or water heater pilots), sparks, cigarettes, or any other sources of combustion are present. Always provide ample ventilation in rooms where batteries are being charged. Failure to do so may result in severe bodily injury and/or property damage.

⚠WARNING

Battery electrolyte is poisonous and dangerous. It contains sulfuric acid. Avoid contact with skin eyes or clothing. Wear rubber gloves and safety glasses while servicing batteries. DO NOT INGEST! This may result in severe bodily injury.

⚠WARNING

A battery is a live electrical source. It cannot be disconnected or neutralized. Do not drop any tool or conductive object onto the battery. A conductive object that comes in contact with the battery terminals will initiate a short circuit of the battery. This could cause the battery to explode resulting in severe bodily injury and/or property damage.

⚠WARNING

1. **Make sure the ignition switch is "OFF", then remove the key.**
2. **Place the shift lever in park.**
3. **Set the park brake.**
4. **Place blocks under the front wheels to prevent vehicle movement.**
5. **Disconnect the negative ground cable from the battery.**

Load Test

NOTE: The battery must be fully charged before performing this test.

1. Clean the battery. Refer to ***Cleaning*** section for information on cleaning the battery.
2. Load test the battery using a battery load test meter (available at most auto parts distributors). Follow the instructions provided with the test meter.
   - If the battery fails the load test, then it should be replaced.
   - If all battery fails the test you should check the charging system before replacing the batteries. Refer to the ***engine manual*** for information on checking the charging system.

Specific Gravity Test

NOTE: The battery must be fully charged before performing this test.

The specific gravity of a cell is an indication of the actual state of charge of the cell. A fully charged cell should have a reading of 1275 to 1300 (see the illustration to the right). A discharged battery will read 1100. Ideally, all cells in a battery will have the same reading. Any cells in a battery that vary by more than 30-points may is indication of a bad cell.

Typical Hydrometer Float

Clean the battery. Refer to ***Cleaning*** section for information on cleaning the battery.

Using part number **77-200-00** hydrometer, check and record the specific gravity of each cell in the battery.

If, after charging, none of the cells exceed a hydrometer reading of 1250 then there may be a fault in the charging system. If the charging system checks OK then the battery is no longer accepting a charge and should be replaced.

NOTE: Refer to the **engine manual** *for information on checking the charging system.*

The highest reading will be the cell that is accepting the most charge. This reading will be used to gauge all other cells.

Compare the specific gravity readings to the highest reading, if the difference between any of the cells is more than 30-points, then that battery should be replaced.

Reconnect the battery, remove the blocks from the wheels and test drive.

WATERING

⚠WARNING

Explosive mixtures of Hydrogen gas are present within battery cells at all times. Do not work with or charge battery in an area where open flames (including gas furnace or water heater pilots), sparks, cigarettes, or any other sources of combustion are present. Always provide ample ventilation in rooms where batteries are being charged. Failure to do so may result in severe bodily injury and/or property damage.

⚠WARNING

Battery electrolyte is poisonous and dangerous. It contains sulfuric acid. Avoid contact with skin eyes or clothing. Wear rubber gloves and safety glasses while servicing batteries. DO NOT INGEST! This may result in severe bodily injury.

⚠WARNING

A battery is a live electrical source. It cannot be disconnected or neutralized. Do not drop any tool or conductive object onto the battery. A conductive object that comes in contact with the battery terminals will initiate a short circuit of the battery. This could cause the battery to explode resulting in severe bodily injury and/or property damage.

⚠WARNING

1. **Make sure the key-switch is in the "OFF" position, then remove the key.**
2. **Place the forward-reverse switch in the center "OFF" position.**
3. **Set the park brake.**
4. **Place blocks under the front wheels to prevent vehicle movement.**
5. **Disconnect the main positive and negative cables at the batteries.**

⚠WARNING

Do not overfill the batteries. Over filling the batteries may cause the batteries to boil over and result in severe bodily injury or property damage.

⚠WARNING

1. **Make sure the ignition switch is "OFF", then remove the key.**
2. **Place the shift lever in park.**
3. **Set the park brake.**
4. **Place blocks under the front wheels to prevent vehicle movement.**
5. **Disconnect the negative ground cable from the battery.**

6. Clean the battery. Refer to ***Cleaning*** section for information on cleaning the battery.
7. Check the electrolyte level in all battery cells. If low, fill to the correct level with distilled water using part number **77-201-00** battery filler, never add additional battery electrolyte to a battery.
8. Reconnect the battery, remove the blocks from the wheels and test drive.

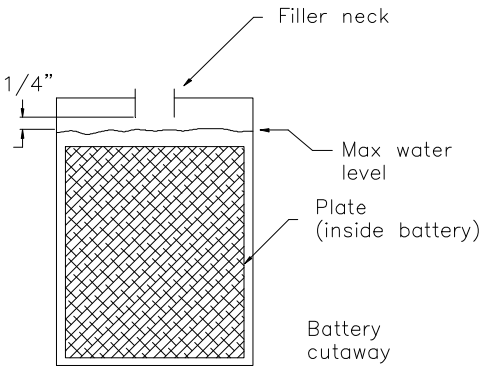

STORAGE AND RETURNING TO SERVICE

Storage

⚠CAUTION

If the battery is removed from the vehicle, do not place it directly on the ground, concrete or solid metal surface. It is recommended to store them on a wooden pallet or equivalent. Storing on the ground, concrete or solid metal surface will cause the battery to discharge and may result in premature failure of the battery.

Thoroughly clean the battery and battery compartment. Refer to ***Cleaning*** in this section for information regarding cleaning the battery.

Check the electrolyte level and charge the battery. Refer to ***Watering*** in this section for information regarding checking the electrolyte level.

Store the vehicle or battery in a cool, dry, well ventilated area.

If storing for more than one month, the battery should be charged as follows:

Storage Temperature (F)	Charging Interval (months)
Over 60	1
Between 40 and 60	2
Below 40	6

Returning to Service

⚠WARNING

Explosive mixtures of Hydrogen gas are present within battery cells at all times. Do not work with or charge battery in an area where open flames (including gas furnace or water heater pilots), sparks, cigarettes, or any other sources of combustion are present. Always provide ample ventilation in rooms where batteries are being charged. Failure to do so may result in severe property damage and or serious

⚠WARNING

Battery electrolyte is poisonous and dangerous. It contains sulfuric acid. Avoid contact with skin eyes or clothing. Wear rubber gloves and safety glasses while servicing batteries. DO NOT INGEST! This may result in serious bodily injury.

⚠WARNING

A battery is a live electrical source. It cannot be disconnected or neutralized. Do not drop any tool or conductive object onto the battery. A conductive object that comes in contact with the battery terminals will initiate a short circuit of the battery. This could cause the battery to explode resulting in property damage and/or bodily injury.

⚠WARNING

1. Make sure the ignition switch is "OFF", then remove the key.
2. Place the shift lever in park.
3. Set the park brake.
4. Place blocks under the front wheels to prevent vehicle movement.
5. Disconnect the negative ground cable from the battery.

6. Thoroughly clean the batteryand battery compartment. Refer to ***Cleaning*** in this section for information regarding cleaning the battery.

⚠CAUTION

Battery electrolyte will stain and corrode most surfaces. Immediately and thoroughly clean any surface outside of the battery that the battery electrolyte comes in contact with. Failure to clean may result in property damage.

7. Check the electrolyte level and charge the battery. Refer to ***Watering*** in this section for information regarding checking the electrolyte level.
8. Test the battery. Refer to ***Testing*** section for information on testing the battery.
9. The battery is now ready to be put back into service.

TAYLOR - DUNN

Wire Diagrams

TABLE OF CONTENTS

A full size print of the diagram is included on the CD.

COMPLETE VEHICLE

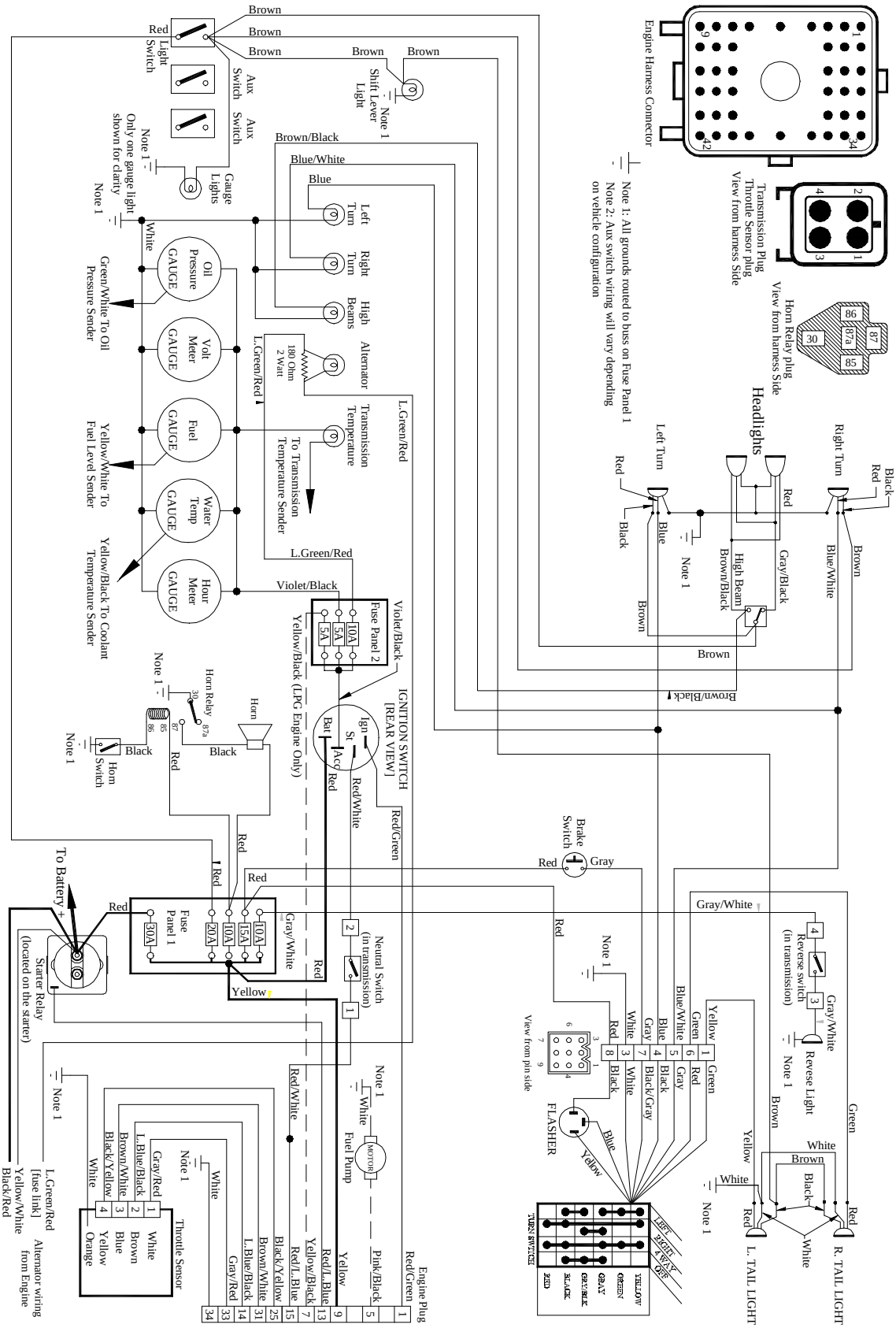

Illustrated Parts

TABLE OF CONTENTS

Front Axle and Steering Knuckle

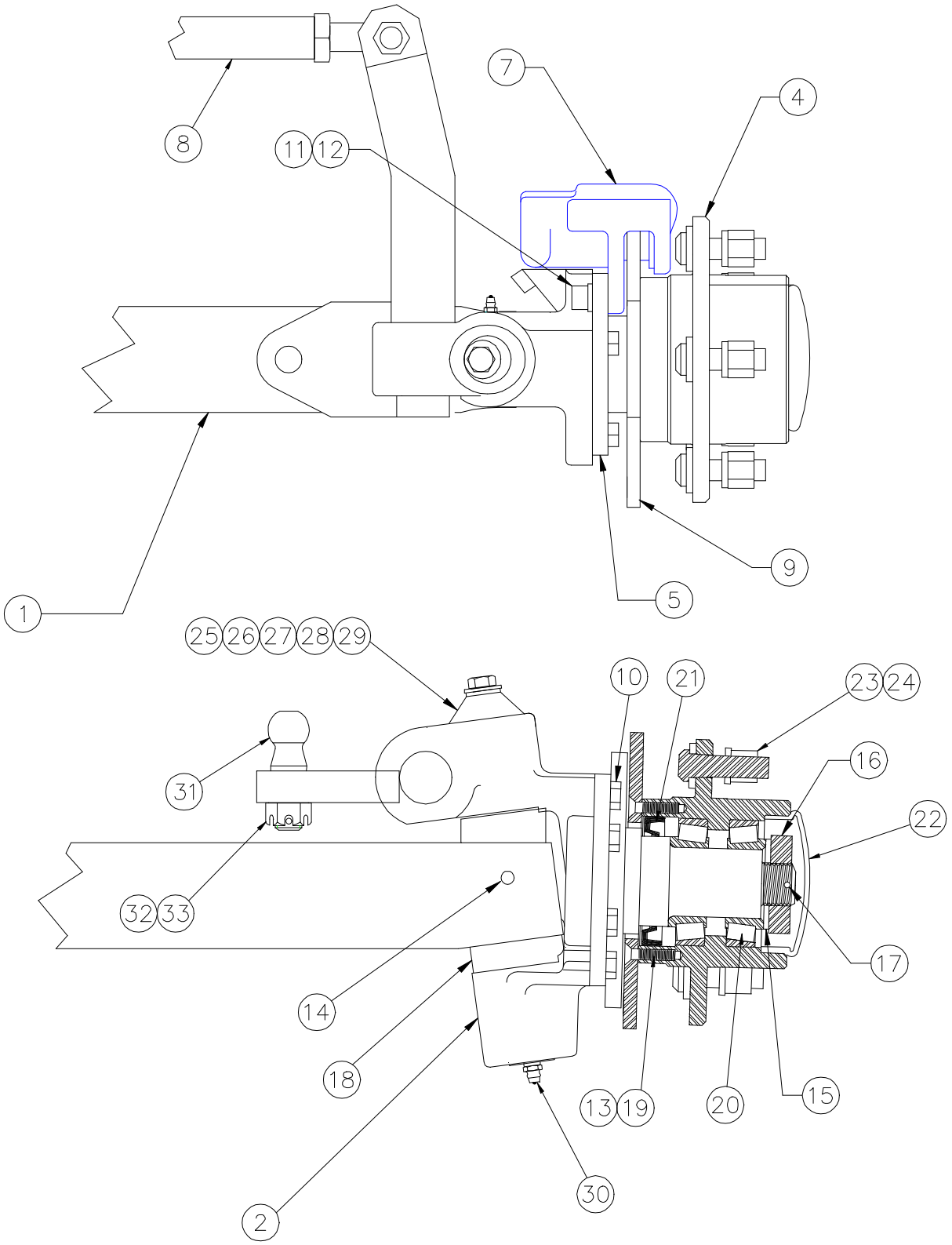

Front Axle and Steering Knuckle			
ITEM #	PART #	DESCRIPTION	QTY
	800-00233	Complete axle assembly, includings hubs and brakes	
1	*	Axle beam	1
2	*	Steering knuckle, left	1
3	*	Steering knuckle, right	1
4	*	Wheel hub	2
5	*	Brake mounting bracket	2
9	*	Rotor	2
10	*	Hex bolt (brake bracket)	8
	*	Split lock washer (brake bracket)	8
13	*	Bolt (rotor)	12
14	*	Roll pin	2
15	*	Key flat washer	2
16	*	Spindle nut	2
17	*	Cotter pin	2
18	*	Thrust bearing	2
19	*	Countersunk lock washer	12
20	*	Bearing	4
21	*	Grease seal	2
22	*	Hub bearing cap	2
25	*	Dust seal	2
26	*	Washer	2
27	*	Hex bolt (dust seal)	2
28	*	King pin	2
29	*	Hex nut (dust seal)	4
30	*	Grease fitting	4
	*	Race, outer	2
	*	Race, inner	2
	*	Spindle bushing, upper	2
	*	Spindle bushing, lower	2

* - Not available at time of printing

Front Brakes

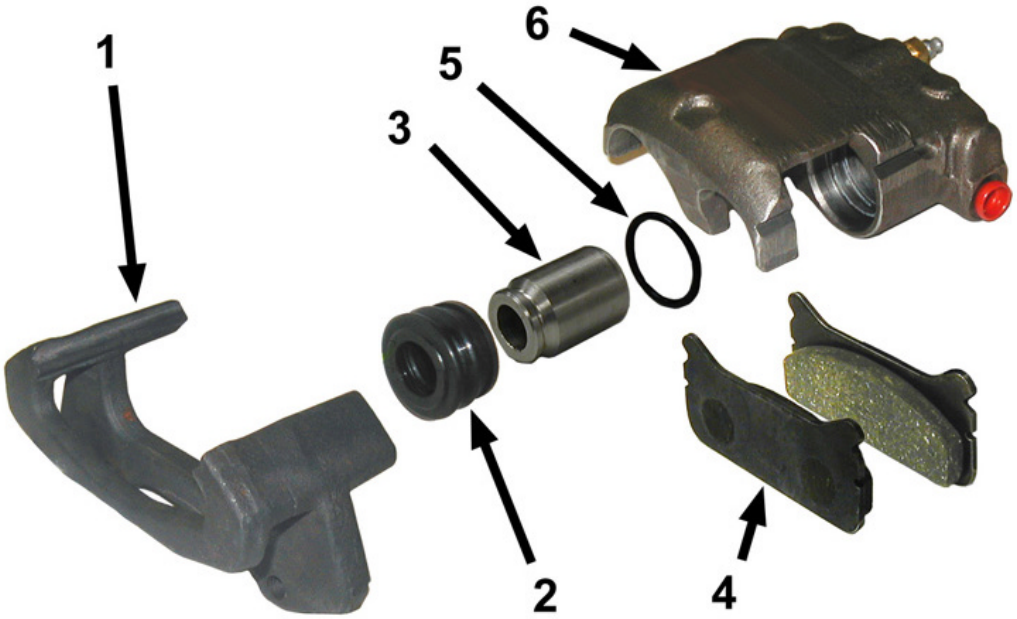

Front Brakes			
ITEM #	PART #	DESCRIPTION	QTY
1	*	Mounting bracket	2
2	*	Boot	4
3	*	Piston	4
4	*	Brake pad	4
5	*	O-ring	4
6	*	Brake body	2
Not shown	*	Bleeder	2
	*	Adapter, bleeder	2
	*	Socket head plug	2
	*	Hex socket bolt (bracket mounting)	4
	*	Split lock washer (bracket mounting)	4

* - Not available at time of printing

Steering Linkage

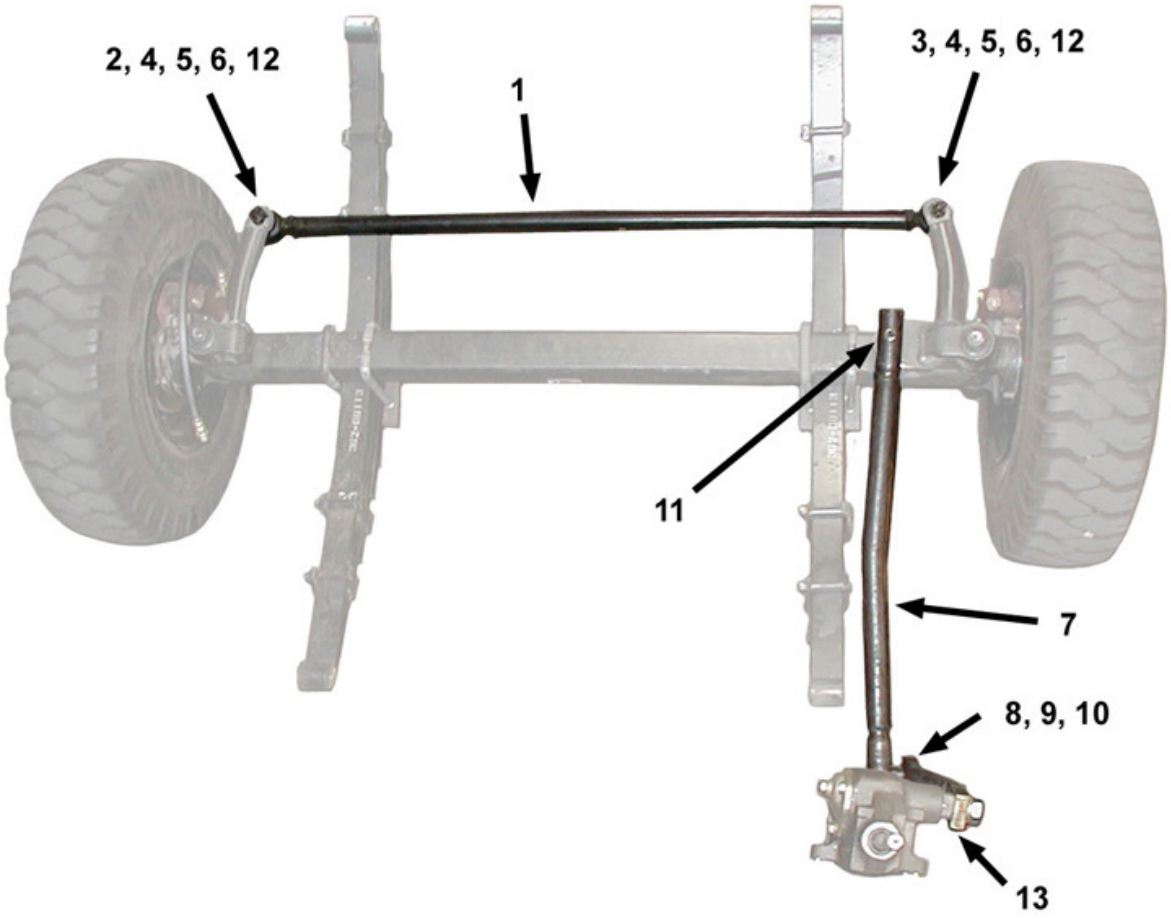

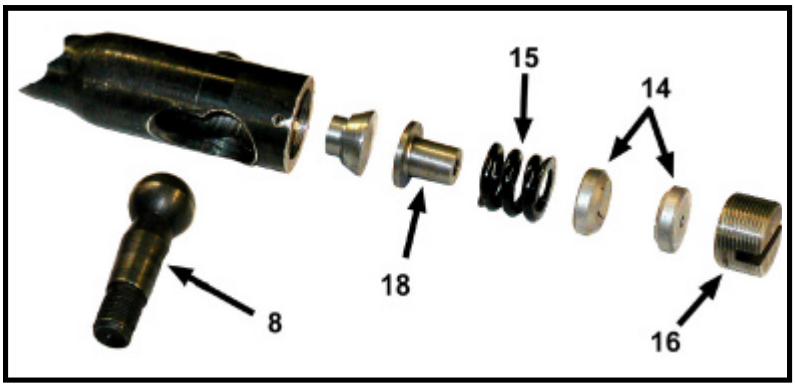

Drag link rod end detail

Steering Linkage			
ITEM #	PART #	DESCRIPTION	QTY
1	*	Tie rod	1
2	*	Boll joint, left thread	1
3	*	Ball joint, right thread	1
4	*	Jam nut, ball joint	2
5	*	Castle nut (ball joint)	2
6	*	Cotter pin (ball joint)	2
7	18-060-00	Drag link	1
8	331-00427	Ball stud	1
9	*	Castle nut (ball stud)	1
10	*	Cotter pin (ball stud)	1
11	*	Grease fitting (drag link)	2
12	*	Grease fitting (ball joint)	2
13	18-108-02	Pitman arm	1
14	*	Cup, rod end	4
15	*	Spring, rod end	2
16	*	Nut, rod end	2
17	*	Cotter pin (rod end)	2
18	*	Spring guide, rod end	2
19	*	Stop, rod end	2

* - Not available at time of printing

Steering Column

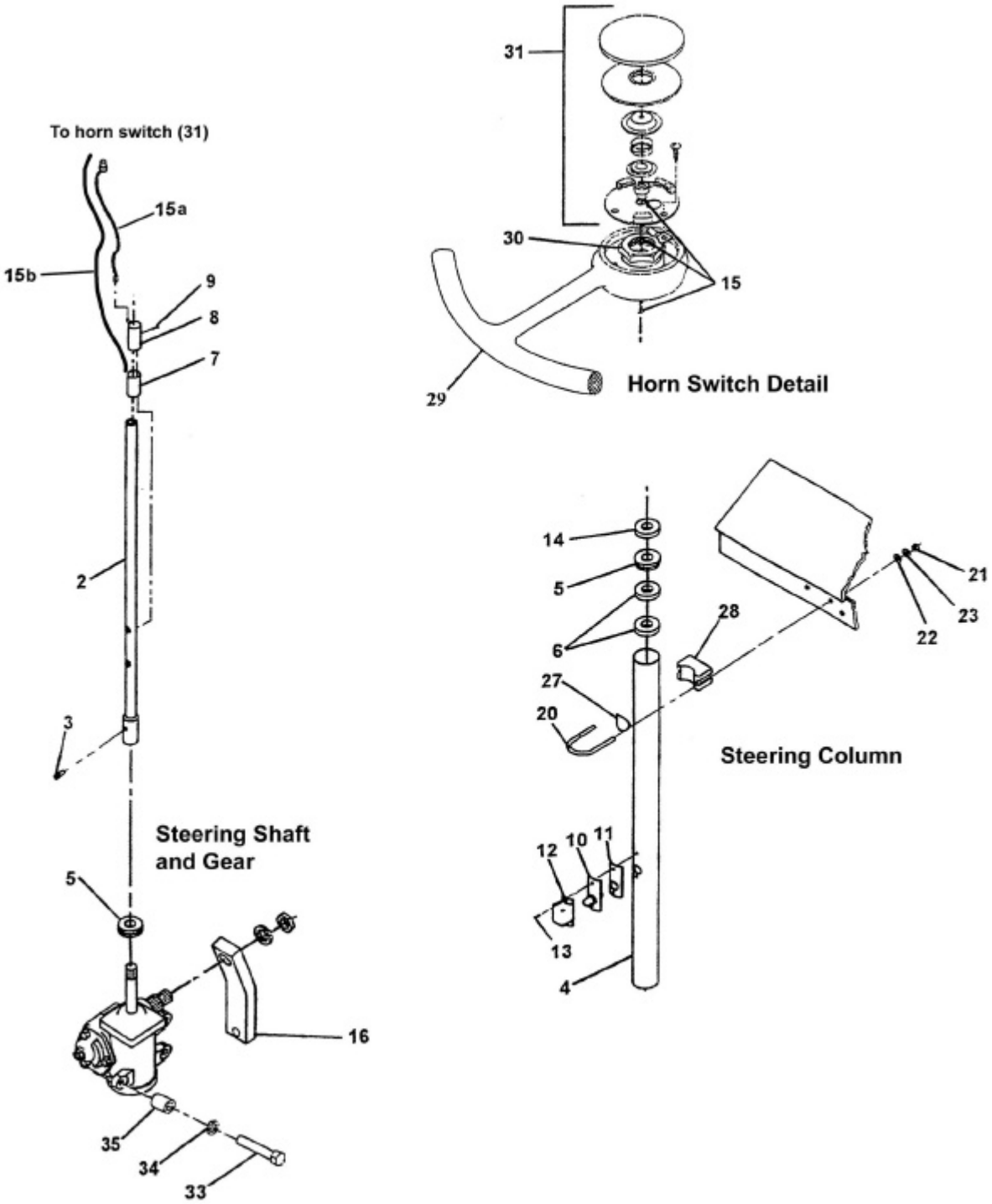

Steering Column			
ITEM #	PART #	DESCRIPTION	QTY
2	836-00104	Steering shaft	1
3	331-00558	5/15-18 x 1/4 Setscrew	1
4	349-00973	Steering column tube	1
5	408-00013	Bushing	2
6	408-00014	Bushing	2
7	361-00129	Spacer	1
8	214-00029	Contact ring assembly	1
9	341-00608	8-32 Nylon machine screw	1
10	738-72	Horn contact	1
11	738-66	Spacer	1
12	794-80	Cover	1
13	*	8-32 x 1/4 Sheet metal screw	2
14	903-00048	Dust seal	1
15a	*	Horn wire	1
15b	*	Horn wire	1
16	See steering linkage	Pitman arm	1
20	341-00205	U-bolt	1
21	*	3/8NC KEPS nut	2
22	*	3/8 Cut flat washer	2
23	*	3/8 Split lock washer	2
27	350-03079	Saddle	1
28	417-00001	Block	1
Not shown	310-00274	Mounting bracket (between #28 and frame)	1
29	836-00005	Steering wheel	1
30	*	5/8NF Jam nut	1
31	903-00097	Horn switch	1
33	*	7/16NC x 2-1/4 Hex bolt	3
34	*	7/16 Split Lock washer	3
35	361-00126	Spacer	

* - Not available at time of printing

Steering Gear

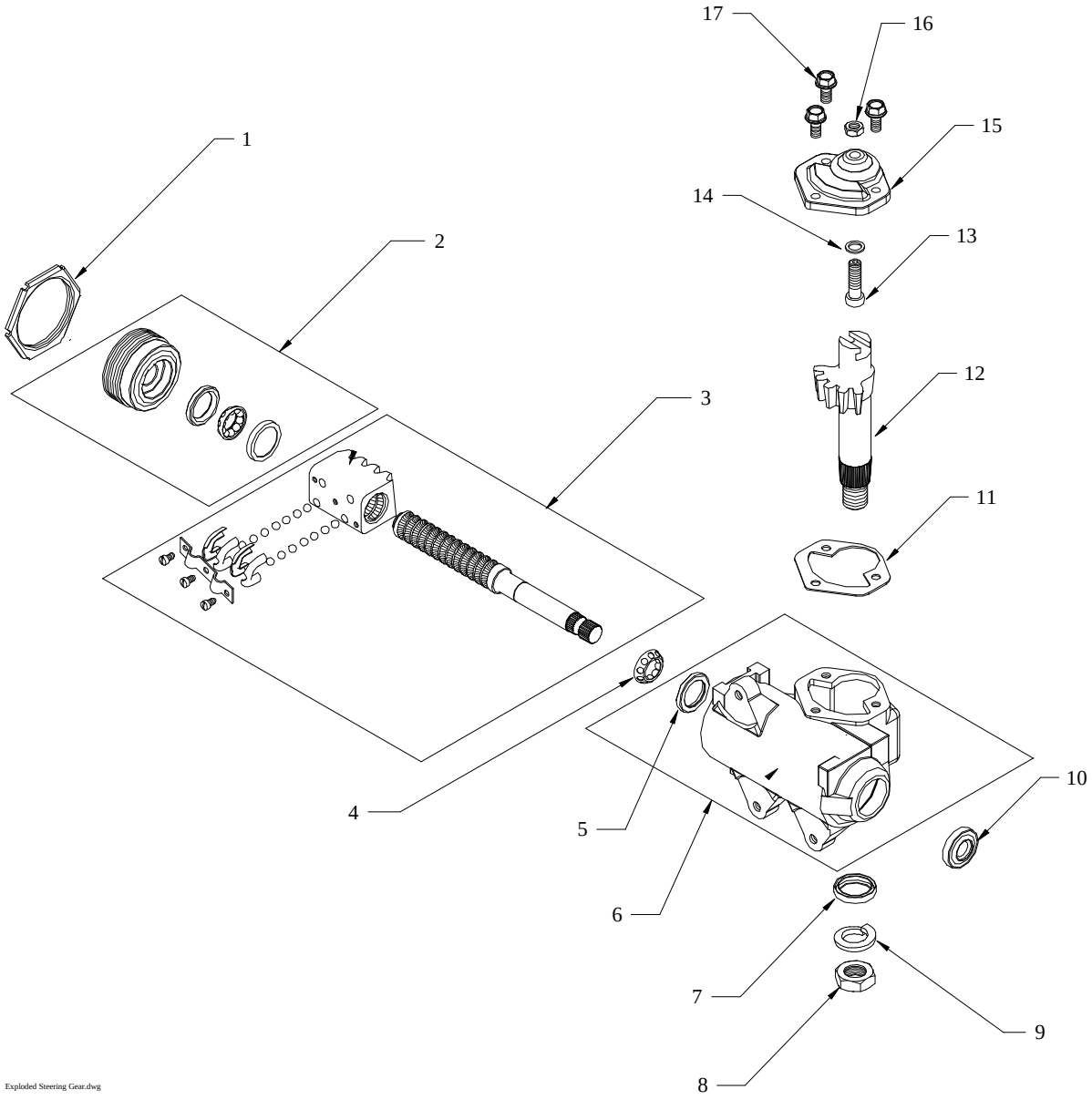

Steering Gear 18-308-15			
ITEM #	PART #	DESCRIPTION	QTY
1	18-308-70	Locknut	1
2	18-308-71	Adjuster assembly	1
3	18-308-73	Worm assembly	1
4	18-308-23	Upper worm bearing	1
5	18-308-22	Upper worm bearing race	1
6	18-308-77	Housing	1
7	18-308-78	Seal, pitman shaft	1
8	18-308-80	Nut, pitman shaft	1
9	18-308-81	Lock washer	1
10	18-308-79	Seal, input shaft	1
11	18-308-82	Gasket	1
12	18-308-76	Pitman shaft	1
13	18-308-75	Gear lash adjuster	1
14	18-308-85	Shim kit	1
15	18-308-84	Side cover	1
16	18-308-86	Jam nut	1
17	18-308-83	Bolt, side cover	3

Front Suspension

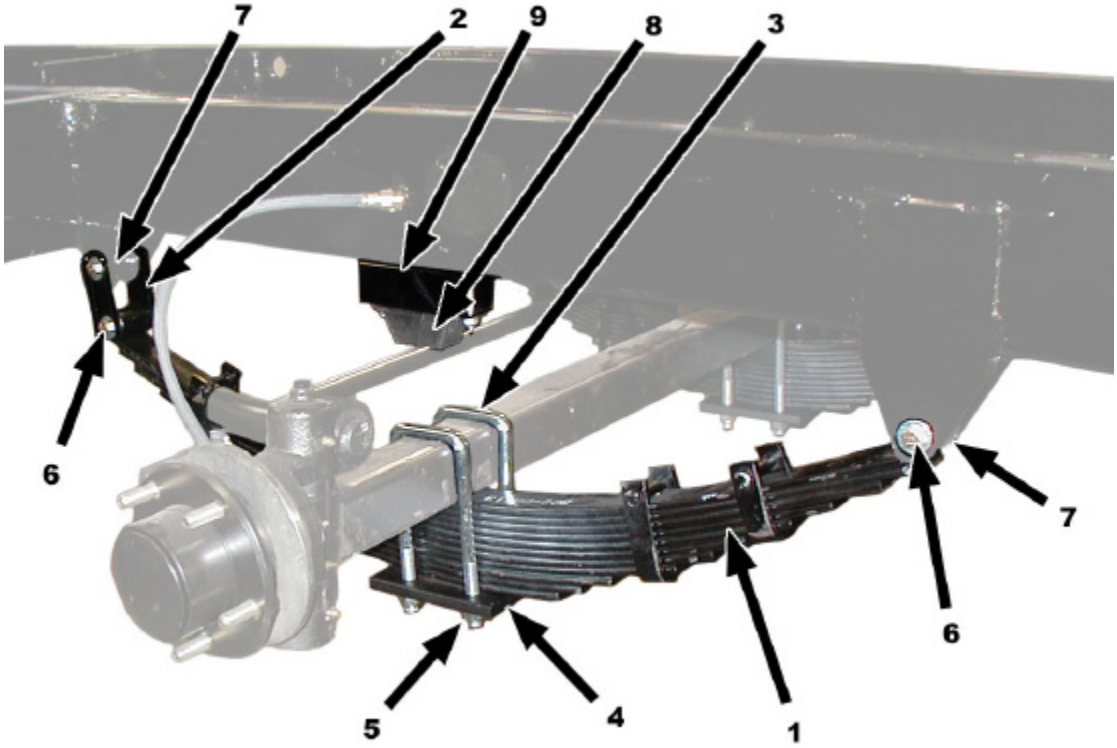

Front Suspension			
ITEM #	PART #	DESCRIPTION	QTY
1	*	Leaf spring	2
2	350-01622	Spring hanger	4
3	965-68	U-bolt	4
4	965-67	Spring plate	2
5	88-159-84	Hex lock nut (u-bolt)	8
6	*	Hex bolt (spring)	6
	*	Bushing, spring eye	4
7	313-00096	Bushing, frame	2
	*	Hex lock nut (spring bolt)	6
8	436-00033	Bump stop	2
	*	Hex bolt (bump stop)	4
	*	Hex nut (bump stop)	4
9	*	Spacer, bump stop	2

* - Not available at time of printing

Rear Axle Assembly (K45)

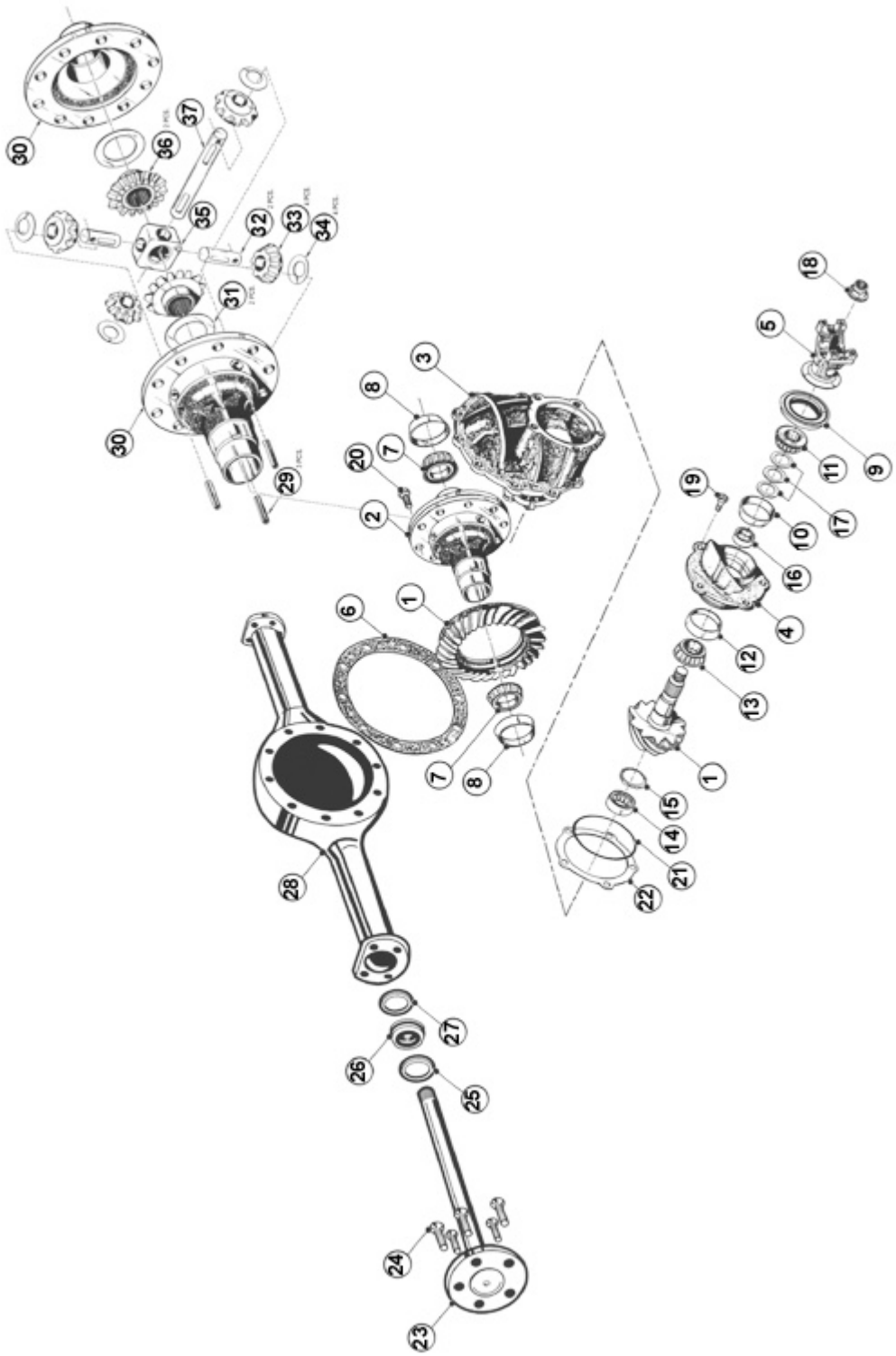

Rear AxleAssembly (K45)			
ITEM #	PART #	DESCRIPTION	QTY
1	*	Ring and Pinion gear sett	1
2	*	Carrior asembly	1
3	*	Carrior housing (3rd member)	1
4	*	Pinion gear housing	1
5	*	Input yoke	1
6	*	Gasket	1
7		Bearing	2
8	*	Race	2
9	*	Seal	1
10	*	Race	1
11	*	Rearing	1
12	*	Race	1
13	*	Bearing	1
14	*	Pilot bearing	1
15	*	Pilor bearing retainer	1
16	*	Spacer	1
17	*	Shims	**
18	*	Pinion nut	1
19	*	Bolt	5
20		Bolt, ring gear	10
21	*	O-ring	1
22	*	Shim	***
23	*	Axle shaft, Right	1
	*	Axle shaft, Left	1
24	*	Wheel stud	10
25	*	Seal	2
26	*	Bearing assembly	2
27	*	Bearing retainer	2
28	*	Axle housing	1
29	*	Roll pin	3
30	*	Carrioer housing	1
31	*	Thrust washer	2
32	*	Pinion shaft, short	2
33	*	pinion gear (spider)	2
34	*	Thrust washer	2
35	*	Center block	1
36	*	Axle gear	2
37	*	Pinion shaft, long	1

** - Not available at time of printing*
*** - Refer to service section for shimming instructions.*
Shim part #'s: Not available at time of printing
**** - Refer to service section for shimming instructions.*
Shim part #'s: Not available at time of printing

Rear Axle Assembly (K60, Page 1)

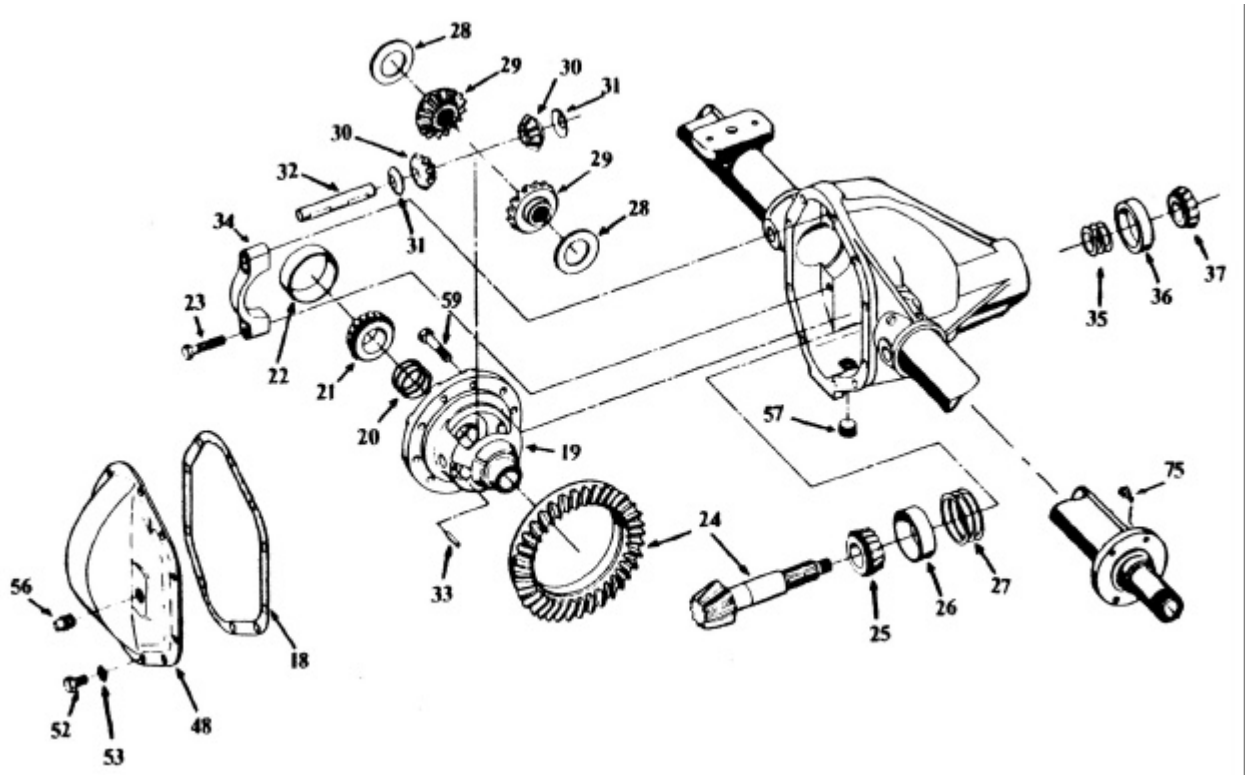

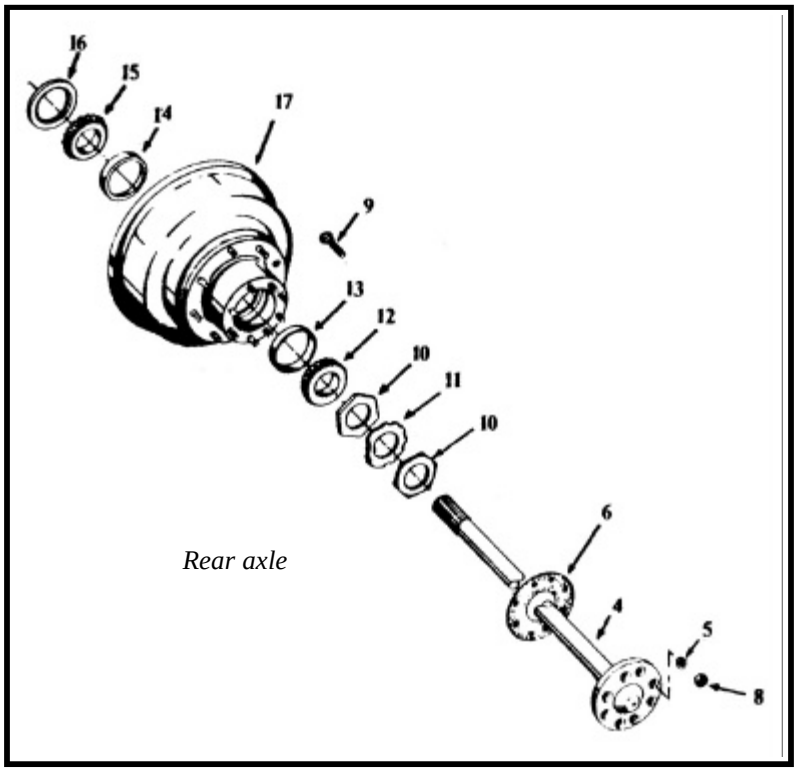

Rear axle

Rear Axle Assembly (K60, page 1)			
ITEM #	PART #	DESCRIPTION	QTY
	800-00211	Complete assembly, including brakes	1
4	*	Axle, left	
	*	Axle, right	
5	*	Tapered insert	
6	*	Gasket	
8	*	Axle nut	
10	*	Hub nut	
11	*	Lock washer	
11	*	Outer bearing	
13	*	Outer bearing race	
14	*	Inner bearing race	
15	*	Inner bearing	
16	*	Seal	
17	*	Brake drum	
18	*	Gasket	
19	*	Carrior housing	
20	*	Shims	
21	*	Carrior bearing	
22	*	Carrior bearing race	
23	*	Bolt	
24	*	Ring and pinion gear set	
25	*	Inner bearing	
26	*	Inner race	
27	*	Shims	
28	*	Thrust washer	
29	*	Axle gear	
30	*	Side gear	
31	*	Thrust washer	
32	*	Spider shaft	
33	*	Lock pin	
34	-	Beaing cap (included with housing)	
35	*	Shims	

* - Not available at time of printing

Rear Axle Assembly (K60, Page 2)

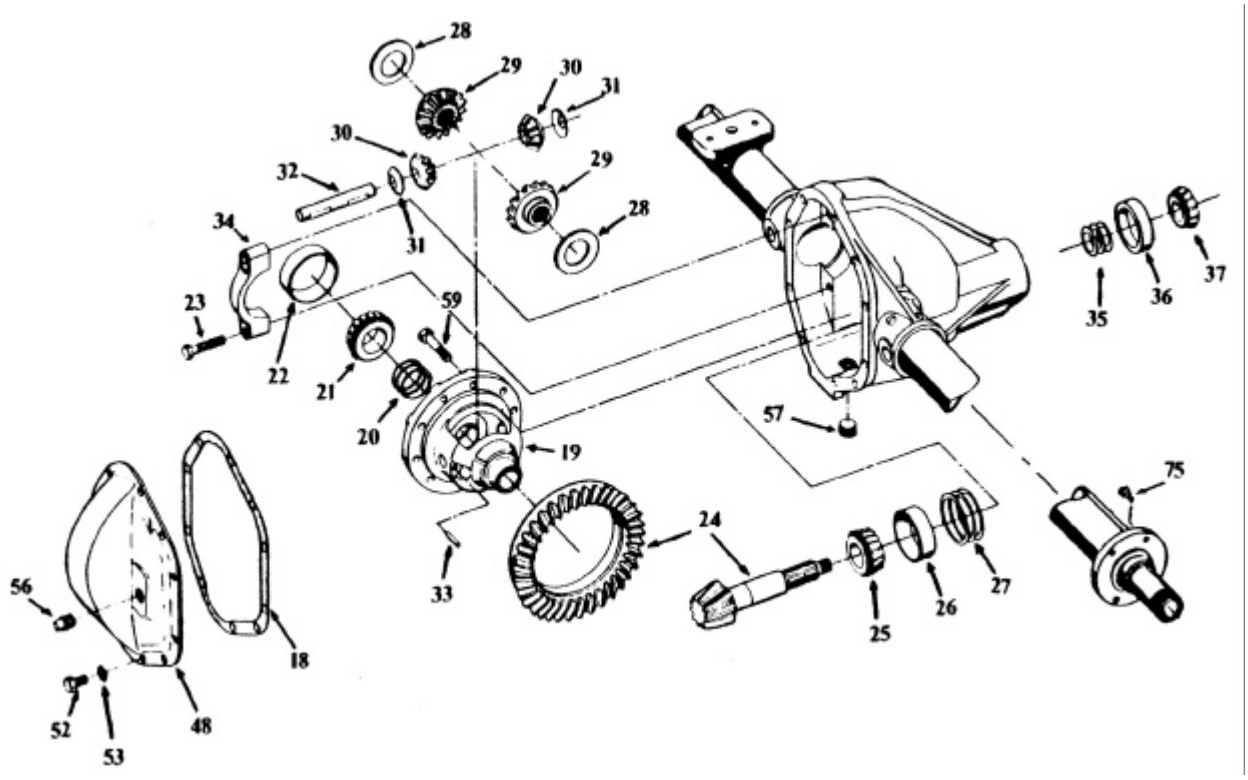

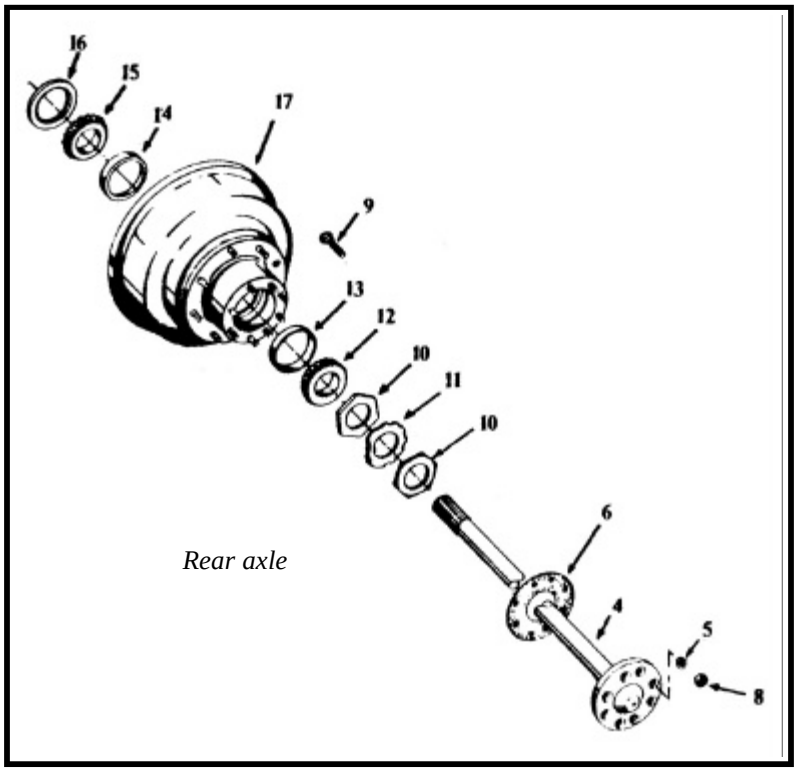

Rear axle

Rear Axle Assembly (K60, Page 2)			
ITEM #	PART #	DESCRIPTION	QTY
36	*	Outer race	
37	*	Outer bearing	
48	*	Carrior cover	
52	*	Bolt (cover)	
53	*	Washer	
56	*	Level plug	
57	*	Drain plug	
59	*	Bolt (reng gear)	
75	*	Bolt	

* - Not available at time of printing

Rear Brakes (K60)

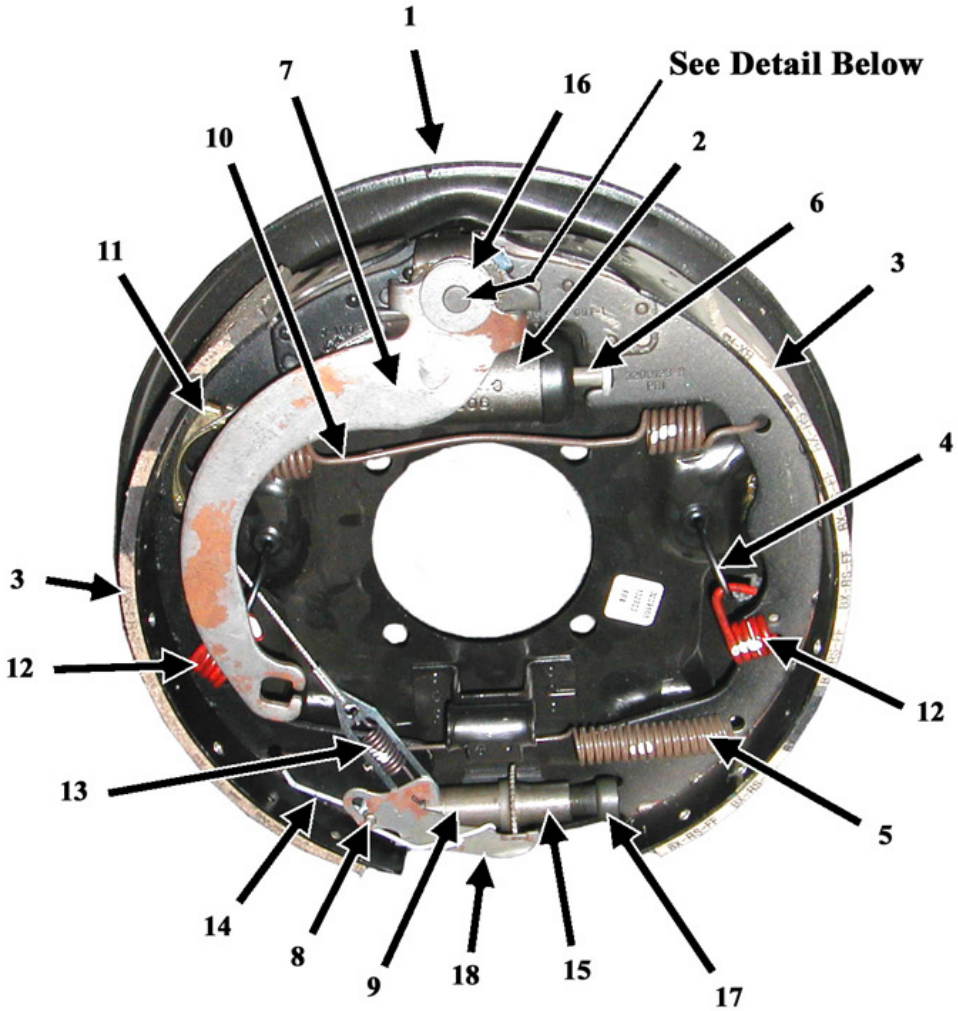

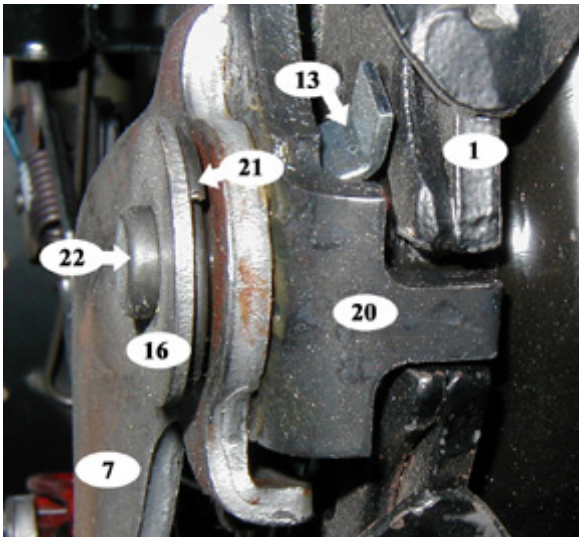

REAR BRAKES (K60)			
ITEM #	PART #	DESCRIPTION	QTY
1	41-351-99	Backing Plate (R)	1
1	41-351-98	Backing Plate (L)	1
2	99-502-99	Wheel Cylinder (R)	1
2	99-502-98	Wheel Cylinder (L)	1
3	42-352-60	Brake shoe kit (left and right, 4 shoes)	1
4	41-352-10	Pin, Brake Shoe Hold Down	4
5	85-209-10	Spring	2
6	41-683-10	Wheel Cylinder Push Rod	4
7	51-352-99	Park Brake Lever (R)	1
7	51-352-98	Park Brake Lever (L)	1
8	41-352-00	Pin, Brake Adjuster	2
9	41-678-10	Socket, Brake aAjuster	2
10	85-211-10	Spring	2
11	27-352-00	Cable Guide	2
12	85-352-30	Spring	4
13	96-828-00	Cable	2
14	85-352-00	Spring (blk)	1
14	85-352-10	Spring (yel)	1
15	97-352-99	Nut, Brake adjuster (R)	1
15	97-352-98	Nut, Brake adjuster (L)	1
16	97-352-10	Washer	2
17	96-352-99	Screw, Brake Adjuster (R)	1
17	96-352-98	Screw, Brake Adjuster (L)	1
18	51-352-00	Lever, Brake adjuster	1
20	42-351-99	Cam, Park Brake (R)	1
20	42-351-98	Cam, Park Brake (L)	1
21	85-352-20	Compression Spring	2
22	96-000-10	Brake Anchor Bolt	2
Not Shown	88-079-85	1/4-NF Hex Nut (for #22)	2
	96-827-14	Sheathed Cable	1
	96-826-13	Brake Cable	2
	96-754-00	Clevis, 5/16-Pin x 2-516 Long	2
	96-826-09	Clevis Lock	2
	96-762-00	3/8 Clevis	1
	96-771-00	3/8 x 3/4 Clevis Pin	1

Rear Brakes (K45)

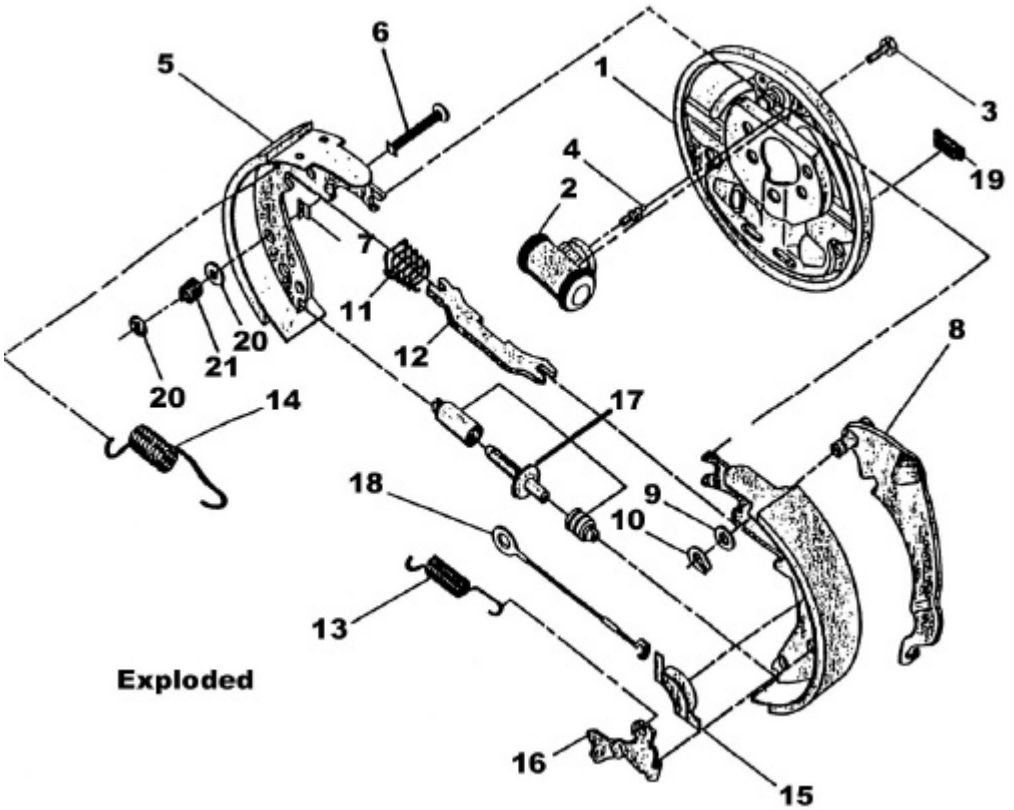

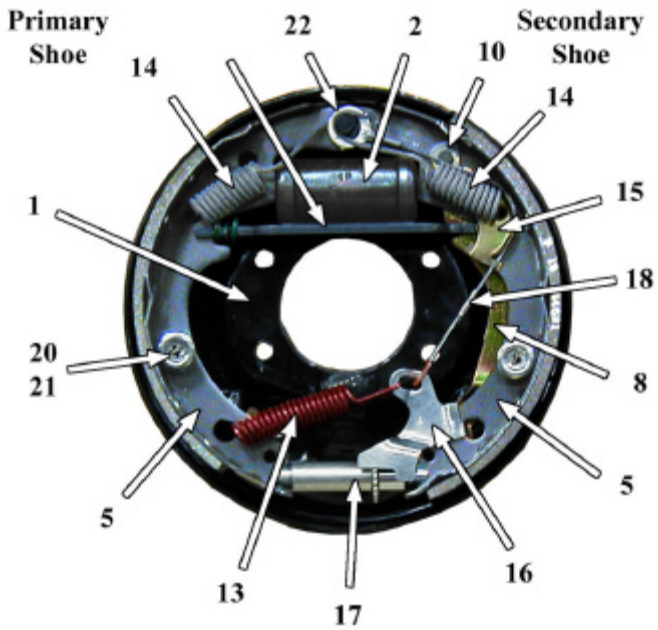

Rear Brakes (K 45)			
ITEM #	PART #	DESCRIPTION	QTY
-	311-00268	Complete brake assembly (left)	1
-	311-00267	Complete brake assembly (right)	1
1	*	Backing plate	2
2	935-00040	Wheel cylinder	2
3	341-00365	Bolt and Lockwasher	4
4	904-00258	Bleeder screw	2
5	935-00044	Brake shoe (primary)	2
6	935-00045	Brake shoe (secondary)	2
7	-	-	-
8	935-00072	Park brake lever (left)	1
	935-00061	Park brake lever (right)	1
9	935-00004	Washer	2
10	935-00003	Horeshoe clip	2
11	935-00025	Spring	2
12	311-00168	Strut	2
13	935-00027	Spring	2
14	935-00026	Spring	2
15	935-00034	Cable guide	2
16	935-00020	Cam lever (left)	1
	935-00021	Cam lever (right)	1
17	935-00029	Adjustor screw (left)	1
	935-00030	Adjustor screw (right)	1
18	935-00028	Cable	2
19	935-00073	Inspection plug	2
20	935-00070	Cup	8
21	311-00178	Spring	4
Not shown	329-00036	Brake drum	2

* - Not available at time of printing

Rear Suspension

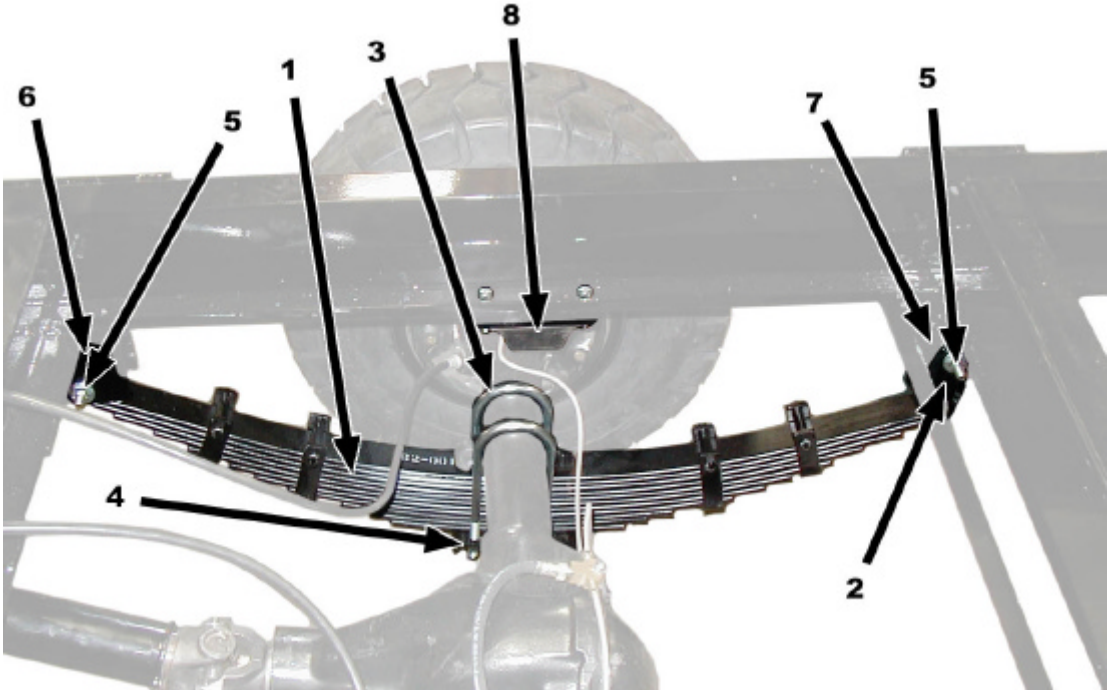

Drive Shaft

Illustration not available

Rear Suspension			
ITEM #	PART #	DESCRIPTION	QTY
1	362-00117	Leaf spring (K 60)	2
	362-00113	Leaf spring (K 45)	2
2	350-01622	Spring hanger	4
3	341-00307	Spring U-bolt (K60)	4
	341-00381	Spring U-bolt (K45)	4
4	350-00793	Spring plate (K60)	2
	350-02550	Spring plate (K45)	2
-	88-159-84	1/2NF Hex lock nut (spring u-bolt, K60)	8
-	88-130-86	7/16NF Hex lock nut (spring u-bolt, K45)	8
5	88-130-21	7/16NC x 3-1/2 Hex bol, grade 8 (spring)	6
	88-129-81	7/16NC Lock nut	6
6	313-00096	Bushing, spring eye	4
7	313-00096	Bushing, frame	2
8	436-00033	Bump stop	2
	*	Hex bolt (bump stop)	4
	*	Hex nut (bump stop)	4

Drive Shaft			
ITEM #	PART #	DESCRIPTION	QTY
	See rear axle	Yoke, Pinion shaft	1
	*	Universal joint	2
	88-088-62	5/16 Split lock washer (K60)	4
	88-099-80	5/16NF Hex nut (K60)	4
	*	Bolt (K45)	4
	301-00216	U-bolt (K60)	2
	*	Clamp (K45)	
	812-00150	Drive shaft (K45, includes U-joints)	1
	812-00149	Drive shaft (K60, includes U-joints)	1

* - Not available at time of printing

Engine

Refer to supplemntary manual M7-001-25

Transmission

Refer to supplemntary manual M7-001-21

Exhaust

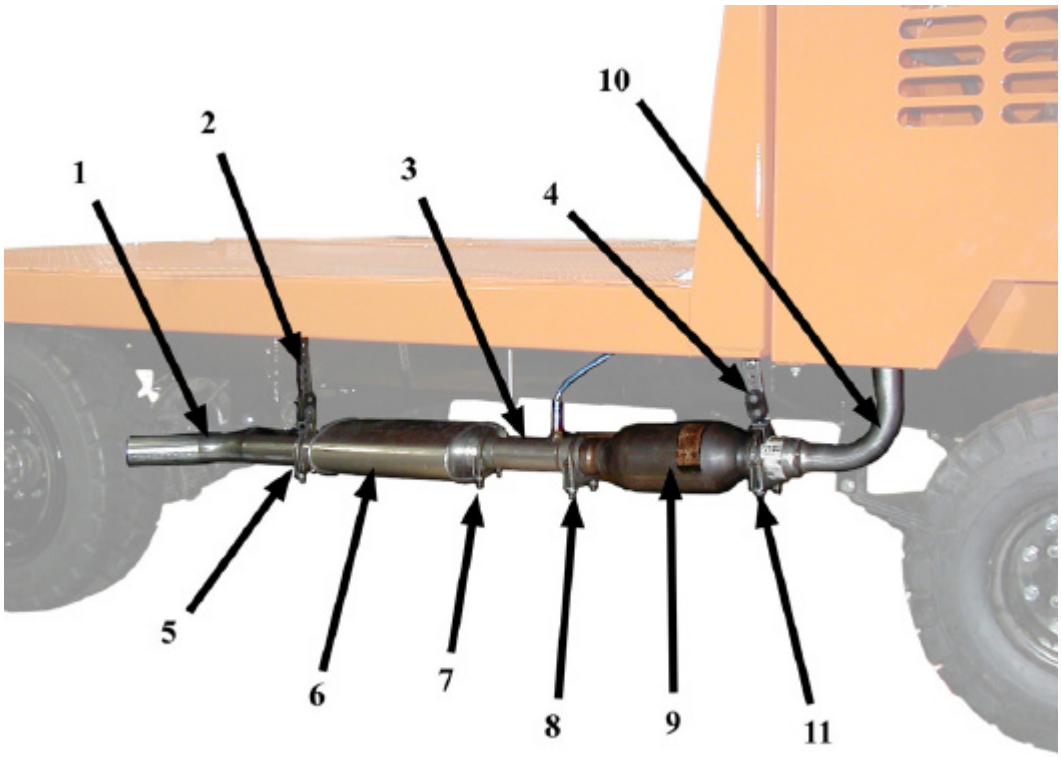

Fuel Tank (gas)

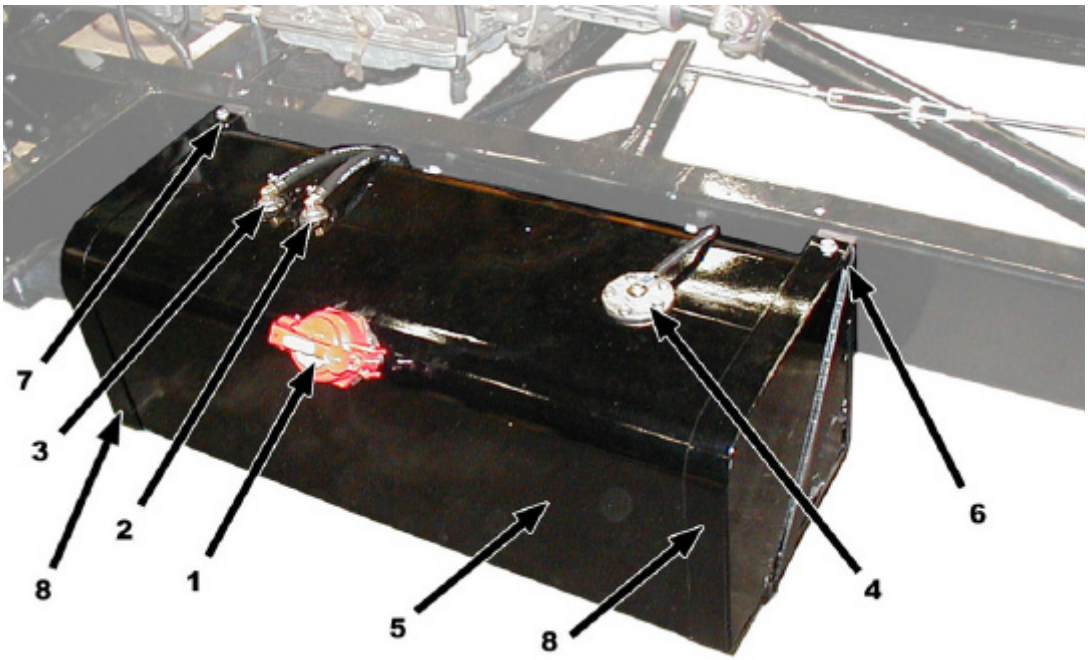

Exhaust			
ITEM #	PART #	DESCRIPTION	QTY
1	66-045-03	Exhaust pipe, tail pipe	1
2	66-400-53	Hanger	2
3	66-045-02	Exhaust pipe, to muffler	1
4	66-400-53	Hanger	2
5	500973	Clamp (muffler)	1
6	500703-D	Muffler	1
7	500973	Clamp (muffler)	1
8	66-400-55	Clamp (catalitic converter)	1
9	*	Catalitic converter	1
10	66-045-05	Exhaust pipe, Engine to catalitic converter	1
11	66-400-55	Clamp (catalitic converter)	1

Fuel Tank			
ITEM #	PART #	DESCRIPTION	QTY
1	316-00042	Fuel cap	1
2	66-410-11	Fuel pickup tube	1
3	96-526-15	Fuel return	1
4	110-00046	Gasket, fuel level sending unit	1
	123-00005	Sender, fuel level	1
5	309-00209	Tank, gasoline	1
6	364-00292	Welded support, rear	1
7	364-00291	Welded support, front	1
8	350-01595	Support	2

* - Not available at time of printing

Cooling system

Illustration not available at time of printing

Cooling System			
ITEM #	PART #	DESCRIPTION	QTY
-	500103-FX	Radiator	1
-	K4C-000-34	Radiator cap	1
-	98-520-01	Hose, upper radiator	1
-	98-520-10	Hose, lower radiator	1
-	230-00012	Temperature sender (located on the left side of the engine block)	1
-	*	Hose clamp, radiator	4
-	98-520-21	Reducer for upper radiator hose	1
	916-96	Transmission cooling line (To radiator)	45"
	916-96	Transmission cooling line (From radiator)	45"
	K4F-000-05	Hose barb, 3/8	
	109-00520	90º fitting for transmission cooling line to radiator	
	510-6	1/2 X 3/8 X 3/8 REDUCING TEE (transmission)	1
	515-5	PIPE NIPPLE, 3/8 X 1-1/2 (transmission)	1
	922-67	INV FLARE MALE,90DEG SWIV. (transmission)	
	96-526-15	1/8 NPT X 90ÊBARB 5/16 HOSE (transmission)	
	96-608-01	Hose clamp (radiator)	4

* - Not available at time of printing

Master Cylinder

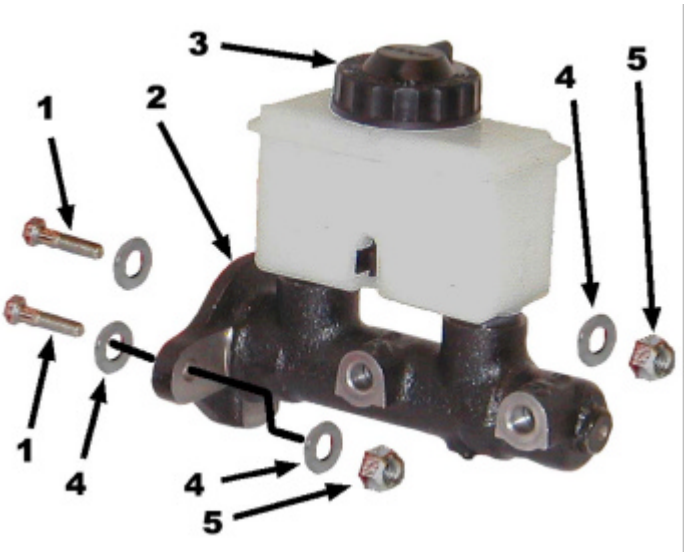

Brake Pedal Assembly

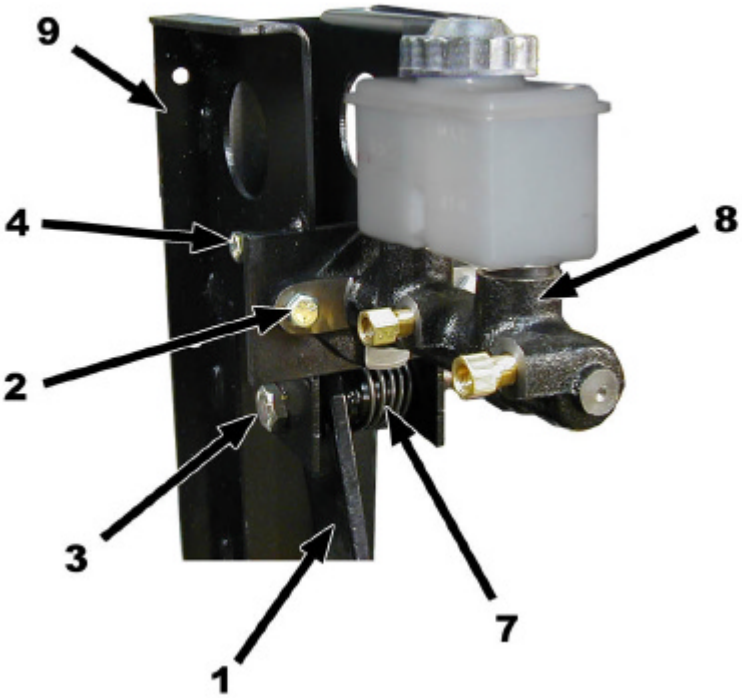

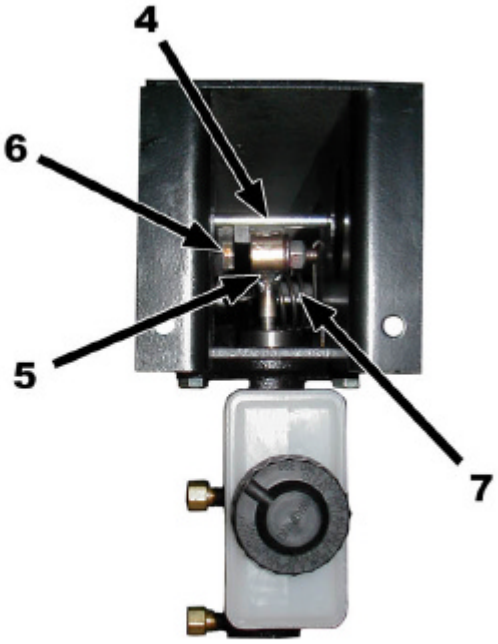

Viewed from above

Master Cylinder (99-511-20)			
ITEM #	*PART #*	*DESCRIPTION*	*QTY*
1	88-080-14	Bolt, 5/16" X 1-1/2" NC, Hex Head	2
2	88-088-61	Washer, 5/16"	4
3	88-089-81	Locknut, 5/16"	2
4	See Usage Table	Master Cylinder (includes item #6 and #7)	1
Not Shown	99-511-51	Rubber Boot, Master Cylinder	1
6	99-511-52	Cap Seal, Master Cylinder	1
7	99-511-53	Cap, Master Cylinder	1

Brake Pedal Assembly			
ITEM #	PART #	DESCRIPTION	QTY
1	00-600-02	Brake pedal, with bushing	1
Not shown	348-00014	Brake pedal pad	1
Not shown	313-00094	Bushing, brake pedal (ream to 0.500" after install)	1
2	See master cylinder	Bolt	2
3	*	Pivot bolt	1
	*	Nut, Pivot bolt	1
4	*	Pedal stp bolt	1
	*	Nut, pedal stop bolt	
5	50-009-30	Push rod	1
6	*	Push rod bolt	1
	*	Push rod collar	1
	*	Push rod bolt nut	1
7	362-00110	Return spring	1
9	00-600-06	Housing	1

* - Not available at time of printing

Brake Lines

Illustration not available at time of printing

Brake Lines			
ITEM #	PART #	DESCRIPTION	QTY
	130-00045	Brake line, rear axle, right side K60	1
	130-00046	Brake line, rear axle, left side K60	1
	130-00122	Brake line, rear axle, right side K45	1
	130-00123	Brake line, rear axle, left side K45	1
	99-563-00	T-fitting, rear axle	1
	99-574-00	Spacer (located inside the t-fitting)	1
	300-00238	Bracket, T-fitting (K60 rear axle)	1
	99-580-20	Hose, rear axle (K60)	1
	99-580-00	Hose, rear axle (K45)	1
	99-576-00	Clip, brake hose	3
	*	T-fitting, front axle	1
	99-580-00	Hose front axle	2
	*	Adapter, master cylinder	2
	99-567-00	Adapter, 90º (front brake body)	2
	71-110-00	Brake light switch	1
	99-575-00	Coupler	1
	*	Brake line, master cyliner to brake switch	1
	*	Brake line, master cylinder to front t-fitting	1
	*	Brake line, brake switch to coupler	1
	*	Brake line, coupler to rear axle t-fitting	1
	*	Brake line, left front	1
	*	Brake line, right front	1

* - Not available at time of printing

Brake linkage (parking brake)

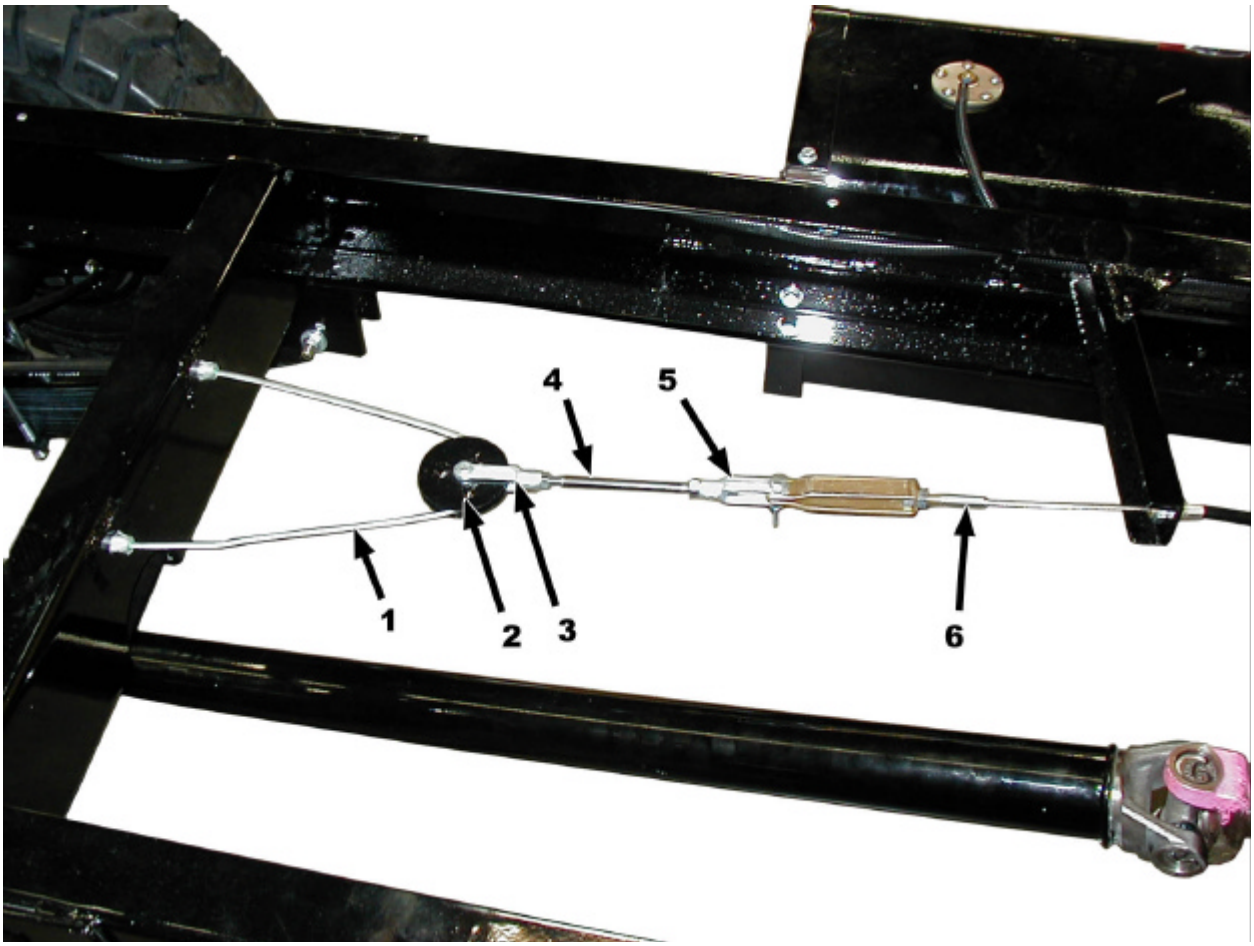

Park Brake Linkage			
ITEM #	PART #	DESCRIPTION	QTY
1	96-826-14	Brake cable2 (equalizer to brakes, K 45)	1
	*	Brake cable2 (equalizer to brakes, K 60)	2
2	00-243-03	Equalizer (K 45)	1
	01-204-32	Equalizer (K 60)	1
3	96-763-00	5/16 IN. CLEVIS CAST	1
4	50-002-01	Threaded rod	1
5	96-763-00	5/16 IN. CLEVIS CAST	1
6	96-820-25	Brake cable1 (handle to equalizer)	1
	*	Cotter pin (brake cable1)	2
	*	Clevis (brake cable1)	1
	*	Clevis pin	2
	*	Hex bolt	2
	*	Hex nut	2
	*	E-clip (brake cable2)	2
Not shown	51-340-30	Park brake handle	1

* - Not available at time of printing

Wheels and Tires

Illustration not available at time of printing

Wheels and Tires			
ITEM #	PART #	DESCRIPTION	QTY
	*	Front Tire/tube/wheel assembly (K 45 / K 60)	2 or 4
	13-974-10	Rear tire/tube/wheel assembly (K 60)	2
	*	Rear tire/tube/wheel assembly (K 45)	2
	442-00046	Tire, Tube and Liner 6.50 x 10	
	*	Tire, 650 x 10 LR E	
	*	Tire, 28 x 9 x 15 LR F	
	*	Tube, 650 x 10	
	*	Tube, 28 x 9 x 1	
	368-00322	Wheel Asembly (front K 45 / K 60, rear K 45)	
	*	Wheel assembly (rear K 60)	
	*	Wheel liner , 650 x 10	
	*	Wheel liner , 28 x 9 x 1	
	361-00131	Wheel spacer (K45)	2

* - Not available at time of printing

Instrument Panel (dash)

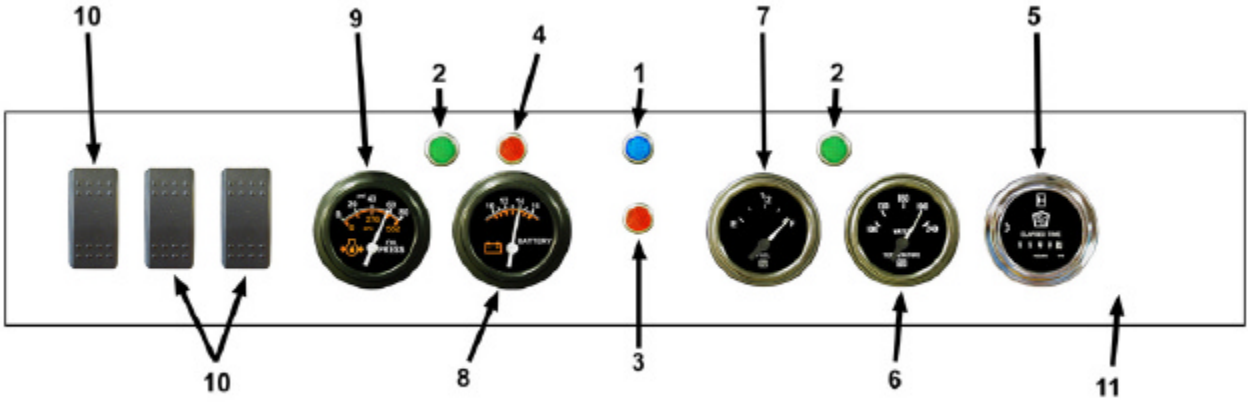

Battery

Illustration not available at time of printing

Instrument Panel			
ITEM #	PART #	DESCRIPTION	QTY
1	72-018-25	Blue panel light	1
2	72-018-22	Green panel light	2
3	72-018-23	Red panel light (transmission temperature warning)	1
4	*	Red panel light (alternator warning)	1
5	*	Hour meter	1
6	216-00042	Engine temperature	1
7	216-00036	Fuel gauge	1
8	216-00052	Battery voltmeter	1
9	636-25	Oil pressure	1
10	71-039-11	Switch	3
11	347-00144	Mounting plate	1
Not shown	700-19	Ignition switch	1
	310-00403	Mounting bracket	1

Battery			
ITEM #	PART #	DESCRIPTION	QTY
	77-054-10	Battery	1
	*	Hold down rod	2
	*	Hex nut	2
	00-661-08	Hold down clamp	1

* - Not available at time of printing

Miscellaneous Electrical

Illustration not available at time of printing

Miscellaneous Electrical			
ITEM #	PART #	DESCRIPTION	QTY
	235-00036	Transmission temperature switch	1
	69-010-15	Resistor, 180 Ohm/ 2 Watt (alternator light)	1
	235-00057	Head light dimmer switch	1
	71-110-00	Brake light switch	1
	71-141-22	Turn signal switch with harness	1
	71-900-05	Turn signal flasher	1
	78-010-30	Fuse panel	2
	79-820-02	Fuse, 5 Amp	
	79-820-04	Fuse, 10 Amp	
	79-820-05	Fuse, 15 Amp	
	79-820-06	Fuse, 20 Amp	
	79-820-08	Fuse, 30 Amp	
	75-147-02	Main harness	1
	202-00247	Battery cable, positive	1
	*	Ground strap, battery to frame	
	*	Ground strap, frame to engine	
	72-022-00	Tail lights	2
	72-051-00	Front turn/running lights	2
	72-076-00	Head light assembly	2
	K4L-000-20	Reverse light	1
	636-31	Oil pressure sender	1
	505-7	Reducing bushing for oil pressure sender	1

* - Not available at time of printing

Miscellaneous Frame, Body, Engine

Illustration not available at time of printing

Frame and Body			
ITEM #	PART #	DESCRIPTION	QTY
	*	Engine cowling	
	*	Engine cover	
	*	Engine cover support	
	458-55	Driver seat	
	01-600-97	Mounting channel	2
	*	Driver seat suport rails	
	337-00092	Front bumper	
	*	Deck (standard)	
	00-600-03	Rear deck	
	916-08	MAXX CONTROL SHIFTER, W/PARK	
	915-85	Shifter mounting kit	1
	370-00062	Shift cable	
	91-045-01	Hood prop rod assembly	
	494-48	Clamp, Air filter hose (ar air filter)	1
	96-608-01	Hose clamp (intake except on air filter)	3
	502477	FAN SHROUD	1
	98-550-00	Intake hose (engine)	
	98-550-10	Intake hose (filter)	
	01-601-11	BRACKET,ENGINE ASY MOUNTING	
	129-00162	SHOCK ABSORBER-BUMPER	
	324-00198	Engine hood	
	01-600-65	Stake side (optional)	
	350-03811	Steering gear cover (floorboard)	1
	00-600-07	Hand brake mounting bracket	1

Decals

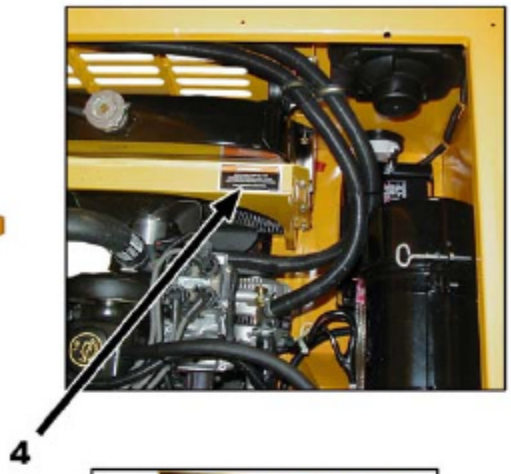

Under Hood

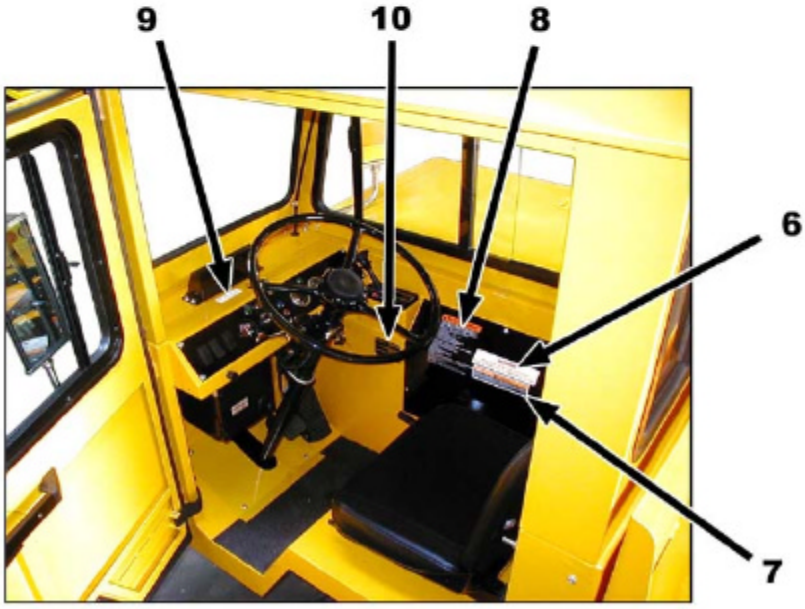

Decals			
ITEM #	PART #	DESCRIPTION	QTY
1	962-91	KALAMAZOO	1
2	94-306-01	DECAL-FUEL/OIL CHECK	1
3	94-301-09	DECAL"TAYLOR-DUNN"1 1/2 HI BLK	3
4	94-306-04	DECAL-ROTATING PARTS WARNING	1
5	94-306-03	DECAL-HEAT WARNING	1
6	94-309-00	DECAL-BRAKE WARNING	1
7	94-384-01	DECAL,NOT MOTOR VEHICLE	1
8	94-313-20	DECAL, SAFETY WARNING	1
9	94-301-41	Brake fluid	1
10	94-373-17	Data plate	1
11	94-313-00	Battery warning	1

Cab (optional)

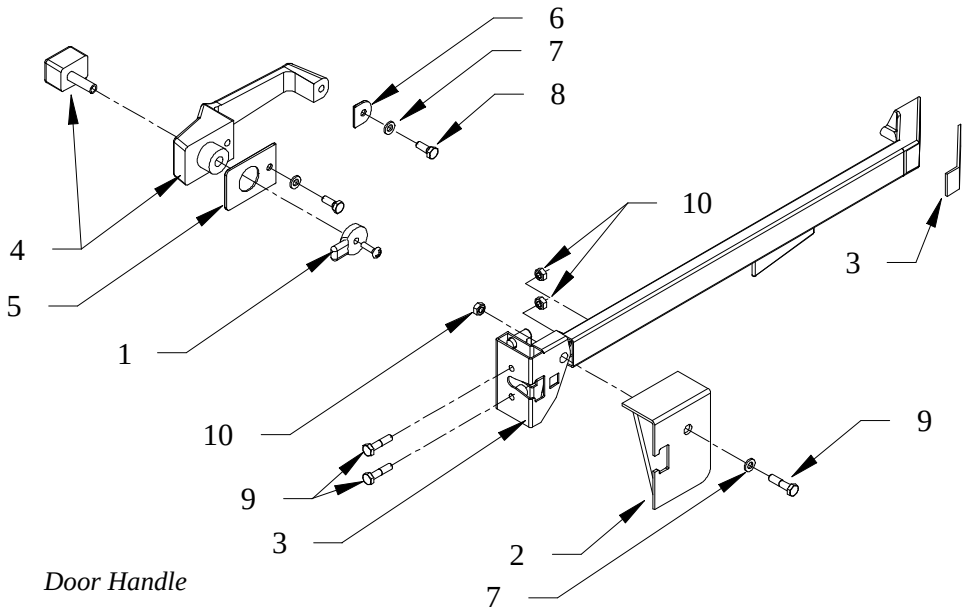

Door Handle

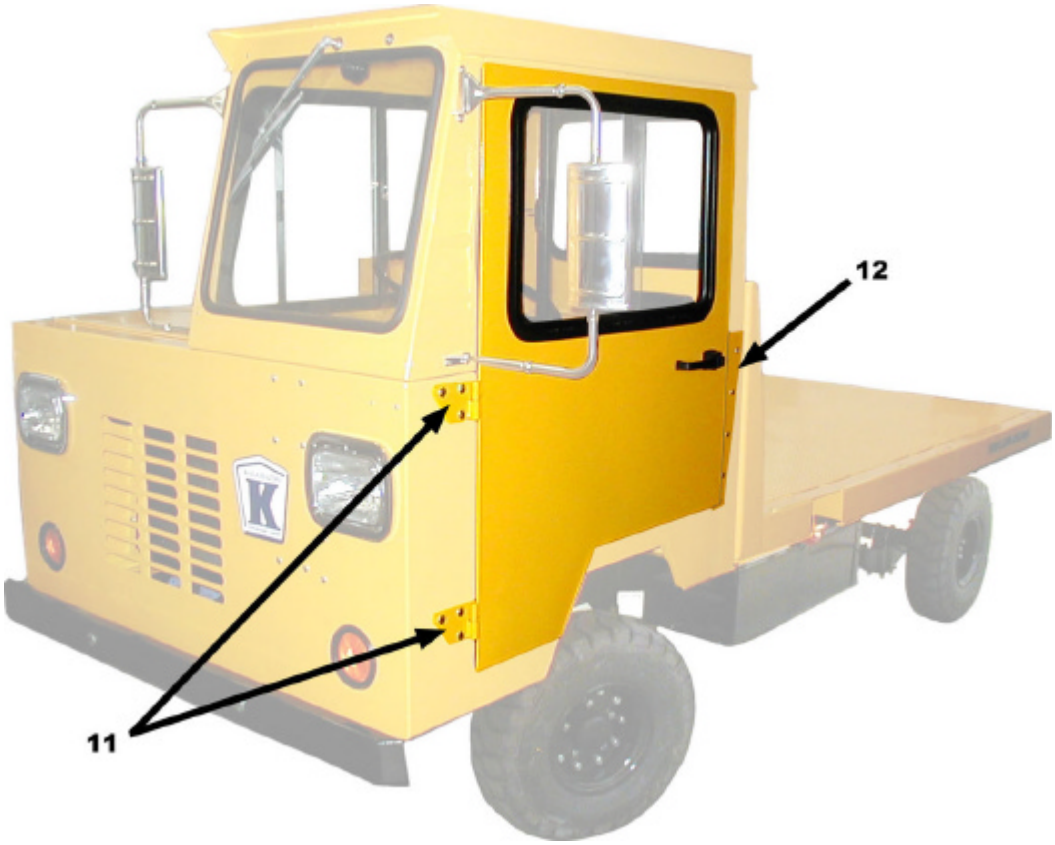

Cab (optional)			
ITEM #	PART #	DESCRIPTION	QTY
1	91-015-80	PUSH PLATE, DOOR LOCK	1
2	91-015-92	PLATE,LEFT, LATCH COVER	1
3	97-318-55	LATCH,INTERIOR,LT	1
4	97-318-70	HANDLE,EXTERIOR,KEYED ALIKE	1
5	97-318-71	GASKET,MAIN,FOR 97-318-70	1
6	97-318-72	GASKET,TAIL,FOR 97-318-70	1
7	88-068-61	1/4 SAE Flat washer	3
8	89-060-12	6mm x 1.0 x 15mm Hex bolt	2
9	89-060-12	6mm x 1.0 x 15mm Hex bolt	1
10	89-060-14	6mm x 1.0 Hex nut	3
11	91-015-65	WLDMT,HINGE,DRIVER SIDE	
12	00-600-62	Door stop post	1
-	01-601-18	POST, STRIKE (door)	1
-	01-155-96	STRAP DOOR STOP	1
-	91-012-39	STRAP, DOOR RESTRAINT, 11"	1
-	98-603-00	GROMMET,RUBBER 3/8 IN. ID	
-	98-615-00	GROMMET,RUBBER,3/4 IN ID	
-	98-618-00	GROMMET, RUBBER 5/8 ID	
-	01-600-20	CAB WELDMENT, OVERHEAD	1
-	01-600-27	DOOR, LT, FOR K45 W/CAB	1
-	74-050-00	MOTOR,WNDSHLD WIPER,& HDWE	1
-	74-051-00	WINDSHIELD WIPER ARM	1
-	74-052-00	WINDSHIELD WIPER BLADE	1
-	75-152-09	HARNESS,WIPERS	1
-	90-852-70	WINDSHIELD, CAB, K60/K45	1
-	90-886-10	WINDOW, CAB DOOR, K45/K60	1
-	90-886-20	WINDOW, CAB REAR, K45/K60	1
-	90-886-30	WINDOW, RIGHT, CAB, K45/60	1
-	91-202-20	SIDE MIRROR, JR. WEST COAST	2

Heater (optional)

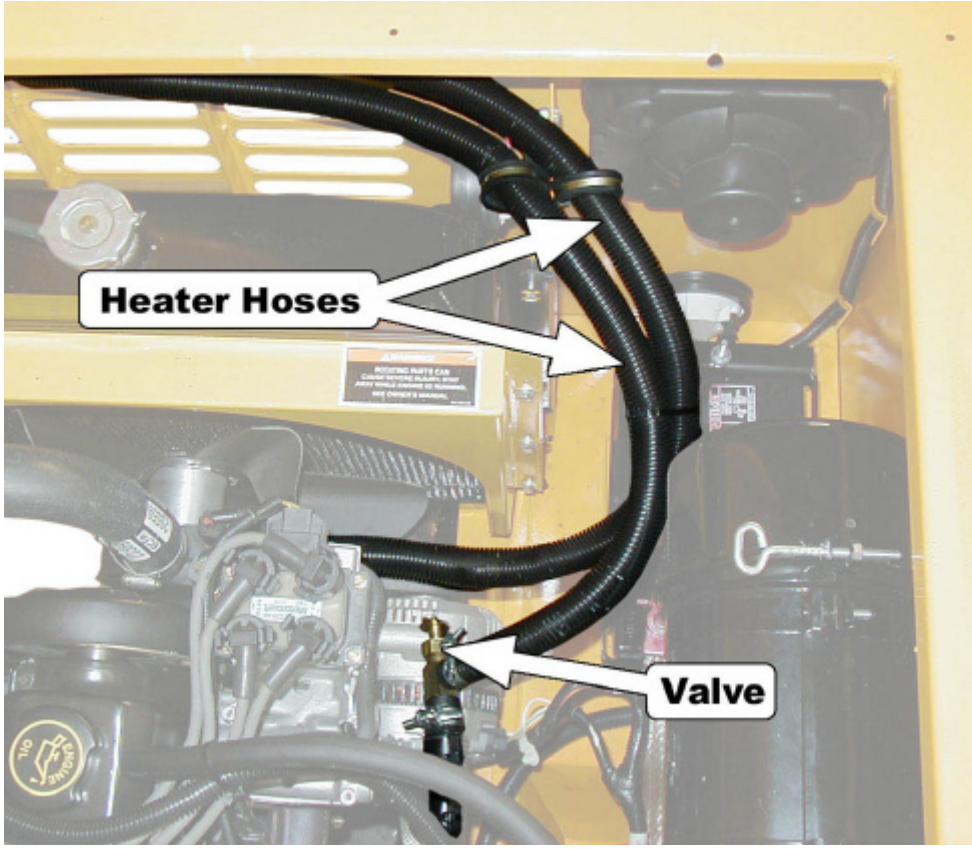

Heater (optional)			
ITEM #	PART #	DESCRIPTION	QTY
	223-00002	HEATER HOSE KIT (all hoses, clamps and valve)	1
	223-00001	Heater Assembly	1
	00-600-61	VENT, HEATER, WELDMENT	1
	00-600-60	MOUNT, HEATER	1

Hitches (optional)

Pintle Hitch

Auto Coupling Hitch

Trailer Hitches			
ITEM #	PART #	DESCRIPTION	QTY
	97-808-00	Automatic Coupling hitch	
	97-804-01	Pintle hitch	
	88-140-14	1/2NC x 1-1/2 Hex bolt	4
	88-149-80	1/2NC Hax nut	4
	88-148-62	1/2 Split lock washer	4

TAYLOR - DUNN

Appendixes

Contents

APPENDIX A: SPECIAL TOOLS

DESCRIPTION	PURPOSE	PART NUMBER
Test Light	Used for testing electrical circuits. Powered by the truck batteries, switchable for 12, 24, 36, and 48 volts.	62-027-00
Accelerator Test Harness	Used to test the solid state accellerator module part number series 62-033-XX.	62-027-31
Sevcon® Handset Analyzer (read only)	Used to test the Sevcon® control systems and reset the Smart View display maintenance meter (includes instructions).	62-027-61
Sevcon® Handset Analyzer with Speed Adjust Capability	Same as 62-027-61 (above) plus allows a limited range of speed adjustment.	62-027-62
Disc Brake Boot Installation Tool	Used to install the rubber boot on all disc brake bodies.	41-350-13
Pin Removing Tool	Used to remove pins and sockets from AMP connectors.	75-440-55
Pin Removing Tool	Used to remove pins and sockets from MOLEX connectors.	75-442-55
Hydrometer	Used to check the specific gravity of battery electrolyte.	77-200-00
Battery Filler	Used to safely add water to batteries.	77-201-00

APPENDIX B: SUGGESTED TORQUE LIMITS FOR STANDARD HARDWARE

HARDWARE IDENTIFICATION

Standard Head Markings

NOTE: Torque value used should be for lowest grade of hardware used. If a grade 2 nut is used on a grade 8 bolt, use grade 2 torque value.

NOTE: Toque values specified are for clean dry threads.

Hex Bolts

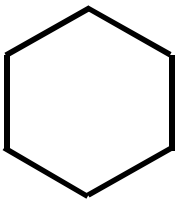

S.A.E. Grade 2

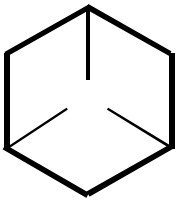

S.A.E. Grade 5

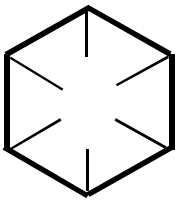

S.A.E. Grade 8

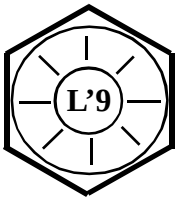

L'9

Other Bolts

Truss Head, grade 2

Carriage Bolt, grade 2
(unless marked as above)

Hex Nuts

Nuts with no markings are to be treated as S.A.E. Grade 2

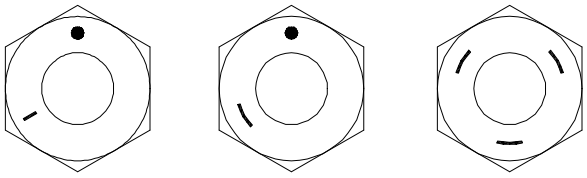

S.A.E. Grade 5

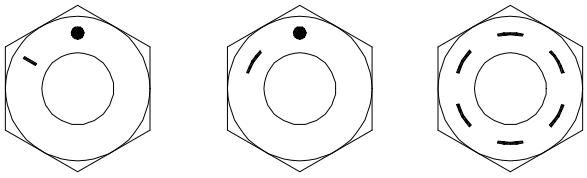

S.A.E. Grade 8

Hex Lock Nuts (stover)

Lock nuts use a letter to indicate the grade of the nut. Grade A' locknuts would be the equivelent of Grade '2' hex nuts, Grade 'B' as Grade '5' and Grade 'C' as Grade '8'.

NOTE: Nuts with no markings are to be treated as S.A.E. Grade A

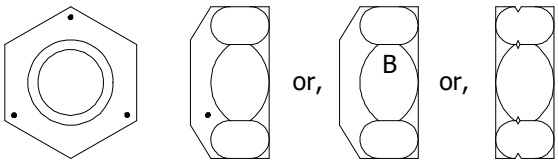

S.A.E. Grade B

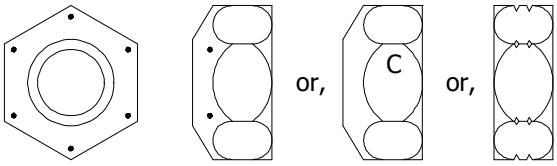

S.A.E. Grade C

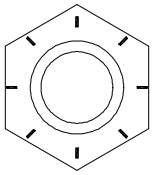

Grade L'9

Other Nuts

Other nuts used by Taylor-Dunn® should be treated as S.A.E. grade A

Suggested Torque Values (non-critical hardware)

Diameter and TPI	Grade 2 Tightening Torque (ft-lb)	Grade 5 Tightening Torque (ft-lb)	Grade 8 Tightening Torque (ft-lb)	L'9 Tightening Torque (ft-lb)
1/4-20	4-7	7-10	10-14	11
1/4-28	5-8	8-12	11-16	12
5/16-18	9-14	14-21	20-29	22
5/16-24	10-15	15-23	22-33	25
3/8-16	16-24	25-37	35-52	40
3/8-24	18-27	28-42	40-59	45
7/16-14	26-38	40-59	56-84	65
7/16-20	29-43	44-66	62-93	70
1/2-13	39-59	60-90	85-128	95
1/2-20	44-66	68-102	96-144	110
9/16-12	56-84	87-131	123-184	140
9/16-18	63-94	97-146	137-206	160
5/8-11	78-117	120-180	170-254	195
5/8-18	88-132	136-204	192-288	225
3/4-10	138-207	213-319	301-451	350
3/4-16	154-231	238-357	336-504	390
7/8-9	222-334	344-515	485-728	565
7/8-14	245-367	379-568	534-802	625
1-8	333-500	515-773	727-1091	850
1-14	373-560	577-866	815-1222	930
1.125-7	472-708	635-953	1030-1545	1700
1.125-12	530-794	713-1069	1156-1733	1850
1.25-7	666-999	896-1344	1454-2180	2950
1.25-12	738-1107	993-1489	1610-2414	3330

Suggested Torque Values (critical hardware)

Torque Table

Group	Description	Torque Range Ft-Lbs	In-Lbs	Nm
Brakes				
	Brake bolt (disc brake body)	11 - 11	132 - 132	15 - 15
	Brake line tube nut fittings	12 - 13	144 - 156	16.3 - 17.7
	Brake spider bolts (Dana 160mm hyd brakes)	25 - 35	300 - 420	34 - 47.6
	Brake spider bolts (Dana 160mm mech brakes)	15 - 19	180 - 228	20.4 - 25.8
	Brake spider bolts (Dana 7x1-3/4 brakes)	16 - 20	192 - 240	21.8 - 27.2
Electrical				
	Battery terminals	8 - 9	96 - 108	10.9 - 12.2
Front Axle				
	Front spindle nut	-	-	-
	Note: Refer to maintenance section in the service manual			
	King pin	-	-	-
	Note: Refer to maintenance section in the service manual			
Rear Axle/Transmission				
	3rd member Gear case cover (GT drive)	45 - 50	540 - 600	61.2 - 68
	Axle bolt (GT drive)	275 - 275	3300 - 3300	374 - 374
	Axle hub nut (Dana)	95 - 115	1140 - 1380	129.2 - 156.4
	Axle tube to center section (Dana F-N-R)	25 - 35	300 - 420	34 - 47.6
	Carrier cap bolts (Dana)	100 - 120	1200 - 1440	136 - 163.2
	Differential Cover plate (Dana H12)	18 - 25	216 - 300	24.5 - 34
	Drain plug (Dana H12)	25 - 40	300 - 480	34 - 54.4
	Drain plug (GT drive)	21 - 25	252 - 300	28.6 - 34
	Gear case to 3rd member (GT drive)	18 - 20	216 - 240	24.5 - 27.2
	Motor mounting (GT/Dana)	6.5 - 7	78 - 84	8.8 - 9.5
	Pinion nut (F2/F3)	175 - 175	2100 - 2100	238 - 238
	Pinion nut (GT drive)	154 - 169	1848 - 2028	209.4 - 229.8
	Ring gear (Dana)	35 - 45	420 - 540	47.6 - 61.2
	Wheel lug nut	75 - 90	900 - 1080	102 - 122.4
Steering				
	Ball joint clamp	28 - 32	336 - 384	38.1 - 43.5
	Ball joint nut	40 - 45	480 - 540	54.4 - 61.2
	Pitman nut (18-308-21 steering gear)	75 - 100	900 - 1200	102 - 136
	Pitman nut (18-308-25 steering gear)	181 - 217	2172 - 2604	246.2 - 295.1
	Rod end nut	20 - 25	240 - 300	27.2 - 34
	Steering shaft pinch bolt	24 - 26	288 - 312	32.6 - 35.4
	Steering wheel nut (18-308-21 steering gear)	28 - 32	336 - 384	38.1 - 43.5
	Steering wheel nut (18-308-25 steering gear)	72 - 86	864 - 1032	97.9 - 117
Suspension				
	Leaf spring hangers	-	-	-
	Note: Refer to maintenance section in the service manual			

APPENDIX C: BRAKE LINING HANDLING PRECAUTIONS

⚠WARNING

Taylor-Dunn does not currently supply asbestos fiber-brake pads/shoes with any vehicle. However, there is the possibility that the original brake pads/shoes were replaced with aftermarket pads/shoes containing asbestos. Since this possibility does exist, the brake pads/shoes should be handled as if they do contain asbestos.

Never use compressed air or dry brush to clean the brake assemblies. Use an OSHA approved vacuum cleaner or any alternate method approved by OSHA to minimize the hazard caused by airborne asbestos fibers and brake dust.

Do not grind, sand, break, or chisel the brake pads/shoes, as this will cause unnecessary dust, possibly releasing asbestos fibers in the air.

Always wear protective clothing and a respirator when working on the brake pads/shoes or their associated components.

Inhaled asbestos fibers have been found to cause cancer and respiratory diseases.

Do not drive the vehicle if any worn or broken part is detected in any part of the brake system. The cause of the damage must be repaired immediately.

Model B 1-00

Taylor-Dunn® Mfg.
2114 W. Ball Rd.
Anaheim, CA 92804
(800)-688-8680
(714) 956-4040
(FAX) (714) 956-0504

Mailing Address:
P.O. Box 4240
Anaheim, California 92803

Visit our Website:
www.taylor-dunn.com