OPERATION
AND
MAINTENANCE MANUAL
WITH
PARTS LIST

MODEL:	GT 3-70 AND GT 3-71
SERIAL NO. :	59050 - 66517
YEAR:	1980 - 1981
MANUAL NO. :	MG-370-06

- IMPORTANT -

READ AND FOLLOW INSTRUCTIONS GIVEN IN SAFETY & OPERATIONS AND THOSE SECTIONS RELATED TO YOUR SERVICE AND REPAIR RESPONSIBILITIES

TAYLOR-DUNN

Commercial and Industrial Vehicles Since 1949

2114 W. Ball Rd., Anaheim, CA 92804 (714)956-4040 Fax (714)956-0504
Mailing Address: P.O. Box 4240, Anaheim, California 92803

TABLE OF CONTENTS

SECTION A
PAGE 1

INSPECTION, SAFETY AND INTRODUCTION
ARRIVAL INSPECTION CHECKLIST

Visual inspection should be made to determine that the truck has remained in good condition during transit. If any damage is found, the details should be noted on the delivery receipt immediately. After delivery the truck should be most carefully checked for HIDDEN DAMAGE. Any concealed damage not noted on the delivery receipt, should be reported, in writing, to the delivering carrier within 48 hours.

The following checklist has been prepared to aid you during arrival and inspection of your vehicle.

a. Open all packages and examine any accessories which may be shipped detached from vehicle.

b. Examine wiring for visible evidence of damage, check all connections to insure that none have loosened during transit.

c. Check all battery connections and electrolyte level in each cell.

d. Inspect battery charger in accordance with manufacturers installation instructions.

e. Check tires for damage and proper inflation. Check wheel lugs to insure their being tight.

f. If vehicle is equipped with hydraulic brakes, check hydraulic lines for evidence of damage.

g. Check brake fluid level in master cylinder.

h. Examine entire vehicle for damage such as dents or cracks.

i. Check operation of controls to see that they are working freely.

NOTE: Occasionally you may receive a "Power Traction" equipped vehicle with the oil level below the oil level point. This is a perfectly normal situation and is not harmful to the unit. It occurs during vehicle transit when oil drains from the chain case into the drive axle housing. A short period of normal operation will restore the chain case oil level to the proper point. To hurry the process, drive the vehicle in reverse for a few minutes then proceed with normal operation.

Upon completion of the visual inspection, an operational test should be made after reading the remainder of Section A and operating instructions contained in Section B.

SECTION A
PAGE 2

INSPECTION, SAFETY, AND INTRODUCTION

SAFETY

The safe and satisfactory use of any vehicle is a responsibility shared by many persons.

As the manufacturer, we feel that it is our responsibility to emphasize vehicle characteristics and make safety recommendations regarding those characteristics. That is the primary purpose of this portion of the manual.

Persons who operate this vehicle need to be aware of, and to observe, the safe driving rules established by local authorities, and need also to be aware of the vehicle operating characteristics and safety recommendations of the manufacturer, to assist them in exercising the judgment necessary to prevent injury to themselves or to others.

IMPORTANT:
Persons who service and maintain the vehicle need to be aware of how their activities relate to safe vehicle operation, and of potential hazards involved in the service and maintenance processes, to assist them in applying sensible judgment to those processes.

STEERING This vehicle has a very small minimum turning radius and high ratio steering gear. These are essential for low effort steering at slow speeds.

CAUTION: These characteristics, so desirable at slow speeds, require that great care be exercised at high speeds to avoid turning so sharply that one or more wheels lose contact with the ground, or that the vehicle is caused to overturn. Be especially careful while traveling down-hill, and avoid traveling across the face of a hill unless there is a cart path. Avoid sharp turns, even at slow speeds, while on a hill.

SPEED CAUTION: This vehicle is designed to attain its maximum safe operating speed on level ground. That speed can easily be exceeded when traveling down-hill. If this is allowed to occur, vehicle stability and braking performance become unpredictable. Do not exceed, under any conditions, the vehicle maximum design speed of 15 MPH.

CONTROLS Bring the vehicle to a complete standstill before operating the forward/reverse switch to change direction of travel. Operation of this control while the vehicle is in motion can result in complete loss of power and brakes. Do not use the accelerator to hold the vehicle at a standstill on an incline. This can cause complete power loss. Use only the brakes to hold the vehicle at rest while on a hill.

BRAKES The brake system relies on contact of rear tires with the ground for effectiveness. As tire to ground contact is reduced, braking effect is reduced. While driving, the operator must consider terrain, speed, and steering maneuvers to prevent tires from losing contact with the ground, with consequent reduction of braking action.

SECTION A
PAGE 3

INSPECTION, SAFETY AND INTRODUCTION
SAFETY
(CONT)

MAINTENANCE Many operating characteristics relate to maintenance in ways which are not readily obvious. Those characteristics most closely related to vehicle operating safety are indicated in Sections D and E.

Also to be considered is the safety of personnel who perform service and maintenance duties. Two characteriscs need special emphasis.

1. This electric vehicle does not "idle" noisily, is never "out of gear", and is set into motion whenever the battery to motor circuit is closed, intentionally or otherwise. Whenever practical, disconnec one or both battery leads to avoid unintentional starting of the motor during servicing and maintenance.

2. Batteries emit gases which can be explosive, especially while they are being charged. Personnel who are involved with servicing vehicles, or maintaining vehicles, need to be made familiar with this hazard. A detailed explanation is contained on Page 1 and 3 of Section J8.

CAUTION:

1. When performing maintenance on any part of the vehicle electrical system disconnect main battery leads, place forward/reverse switch in neutral. Remove key from keylock in dash panel.

2. Never replace a circuit fuse with one having a higher rating than the original equipment fuse. Fuses have been selected to provide full circuit protection for all operating conditions. A FUSE WILL ONLY BLOW DUE TO A SHORT-CIRCUIT. Therefore, always locate and correct the cause of short-circuit before replacing a blown fuse. Using a fuse of higher rating is an UNSAFE PRACTICE and could cause serious damage to equipment.

3. Intentional or unintentional mis-use of controls could result in an accident.

INTRODUCTION

This vehicle is designed as a golf cart for carrying two people and two golf bags. It is designed to be driven in and around the golf course, both on grass and paved surfaces. It is not designed to travel in excess of 15 MPH under any conditions. Speeds in excess of this can cause motor damage and unstable steering.

MODEL NUMBER

This manual covers GT-370-00 and GT-371-00, starting with Serial Number 59050

SERIAL NUMBER

This Serial Number of your unit is stamped into the top of the left main frame tubing member, just below the deck board on the left side of the cart. The Model Number and Serial Number are on a name plate riveted to the kick panel below the passenger seat. In ordering parts or referring to your unit, please use these numbers. Replacement parts can be purchased directly from distributors located across the United States.

SECTION B
PAGE 1

OPERATING INSTRUCTIONS

The controls on your Taylor-Dunn Vehicle have been designed and located for convenicence of operation and efficient performance. Before driving your vehicle for the first time, familiarize yourself with each of the controls after carefully reading the instructions contained in this manual.

STEERING

The steering system is of the automotive type. Turn the Steering wheel to the right (or clockwise) for a right turn and left (or counterclockwise) for a left turn.

PARKING BRAKE

To engage park brake, step firmly on park brake pedal. To release park brake pedal, pull brake pedal release knob and the park brake pedal will return to the full release or off position.

The seat operated park brake, on models so equipped, is designed to automatically apply the park brake anytime the operators seat is unoccupied. When the seat is depressed, the park brake is automatically release; provided the foot operated park brake is released.

CAUTION:
Never leave the vehicle on a hill or incline without applying the foot operated park brake since depressing the drivers seat will automatically release the seat park brake, allowing the vehicle to move unexpectidly and therefore, could result in an accident.

SERVICE BRAKE

The brake pedal is designed and located for right foot operation. It is the pedal located to the left of the accelerator pedal. It functions the same as the brake pedal in your automobile. Depressing the pedal applies the braking action. The greater the effort applied to the pedal with your foot, the greater the braking action to your vehicle. Removing your foot from the pedal allows immediate release of the braking action.

FORWARD-REVERSE SWITCH

The forward-reverse switch is located to the right of, and below the drivers seat and can be operated only when the key is in the unlocked position. To place the handle in the FORWARD position, move it downward. To place the handle in the REVERSE position, move it upward.

CAUTION:
The forward-reverse switch serves the same purpose as the transmission in your automobile. Treat it with the same respect and care. DO NOT SHIFT from forward to reverse or vice-versa while the vehicle is in motion.
Shifting while in motion, especially near top speed, causes great strain to your vehicle and will eventually cause severe damage.

ACCELERATOR PEDAL

The accelerator pedal is located to the right of the brake pedal. It is designed for right foot operation similar to your automobile. Depressing the pedal turns the power on to the motor. It also controls the amount of power delivered to the motor in 4 steps. When driving your vehicle you will be able to feel the 4 steps of power, with full power when accelerator is fully depressed and minimum power when only partially depressed. You will have the same control of power in both directions of travel. Your forward/reverse switch determines the direction of travel and your accelerator pedal controls the speed.

HORN BUTTON (Optional)

The horn button is located on the switch panel to the left of the steering column. Depressing the button sounds horn. Releasing button will immediately silence horn.

LIGHT SWITCH (Optional)

The switch for operating headlights and taillights is located on the switch panel to the left of the steering column. The ON-OFF positions are labeled.

BATTERY CHARGER

Refer to Section J8 for proper instructions to operate your battery charger.

SPECIAL ACCESSORIES

Refer to the appropriate section of this manual for separate operating instructions pertaining to any special feature or accessory your vehicle may have.

SECTION B
PAGE 3

OPERATING YOUR VEHICLE

CAUTION: Before operating vehicle, apply service brake as necessary to preclude unexpected movement of vehicle and release the foot operated park brake. Pull Park brake release knob and observe that the park brake pedal returns to the full release or off position.

To put your vehicle into operation, unlock forward/reverse switch by turning keyed lock counterclockwise. Select direction you wish to travel by moving the handle of forward/reverse switch into position. Slowly depress accelerator pedal until vehicle is moving at the desired speed. Steer vehicle as required utilizing the foot brake and accelerator to control your speed as desired. For greatest efficiency, it is recommended that you travel at the fastest speed that you can safely maintain. You will find that your vehicle will consume almost as much current at low speed as it does at higher speeds. Therefore, without taking any unnecessary risk traveling at the faster speed will deliver more miles per battery charge than continual use in the lower speed range.

CAUTION: Do not "hold" vehicle at a standstill on a hill or incline using your accelerator only. Continued "stalled" condition as described will damage motor and electrical controls. Use either your service brake or park brake to hold the vehicle on a hill safely.

When you leave your vehicle, it is best to always place forward/reverse switch in neutral position. Set park brake to prevent vehicle from rolling free, and lock and remove key.

Drive safely and enjoy your Taylor-Dunn Vehicle.

SECTION D
PAGE 1

MAINTENANCE GUIDE CHECKLIST

This checklist is provided for your convenience as a guide for servicing your vehicle. If followed you will enjoy a good running and trouble free unit. It has been set up for average normal use. More frequent service is recommended for extreme or heavy usage. If desired your Taylor-Dunn dealer will gladly perform these services for you as he has expert service men in the field for this purpose. Do not hesitate to call your Service Manager if any questions arise.

CAUTION: When performing maintenance on any part of the electrical system, disconnect main battery leads, place Forward/Reverse switch in neutral, turn key to off position and remove from switch. Set Parking Brake.

MAINTENANCE SERVICE	REFER SECTION	EVERY WEEK	EVERY MONTH	EVERY 3 MONTHS	EVERY YEAR
Check & record Sp. gravity & water level of each cell. Fill, as necessary, using distilled water (See Chart in Section J8)	J8	X	X	X	X
* Examine battery terminal connections Clean and tighten as necessary, but not while batteries are being charged.	J8	X	X	X	X
* Apply lube to speed control sliding contact area with electrically non-conductive applicator. Use T-D Grease 94-421-00 or a quality hi-temp grease with a 500° min. drop point.	J6 & E		X	X	X
	CAUTION:	NEVER USE A SUBSTITUTE GREASE THAT CONTAINS GRAPHITE, METAL PARTICLES OR IS ELECTRICALLY CONDUCTIVE			
NOTE: *Switch may require cleaning and lubrication more often than once a month depending on vehicle operating environment. See Sect. J6 for additional information.					
* Check tire pressure	J1	X	X	X	X
Adjust belt tension	J2	X	X	X	X
Adjust motor mount & chain (See Chart, Section J2)	J2		X	X	X
* Lubricate steering linkage with grease (8 Zerk fittings)	E			X	X
* Lubricate front wheel bearings (2 Zerk fittings)	E			X	X
* Lubricate linkage pivot points and suspension points with all purpose engine oil.	E		X	X	X
Wash off batteries with water, (Use soda if necessary)	J8		X	X	X
Check all wire connections. Be sure they are all clean and tight.			X	X	X

* Items related to safety recommendations

SECTION D
PAGE 2

MAINTENANCE SERVICE	REFER SECTION	EVERY WEEK	EVERY MONTH	EVERY 3 MONTHS	EVERY YEAR
Check brake lining for wear, adjust as necessary	J2			X	X
Drain differential and refill with SAE 30 oil (refer to lubrication diagram)	J2 & E				3 years

MASTER CONROL SWITCH

Lubricate Monthly. Apply lube to Speed Control Sliding Contact area with electrically non-conductive applicator. Use T-D Grease 94-421-00 or a quality hi-temp grease with a 500 F. Min. Drop Point.

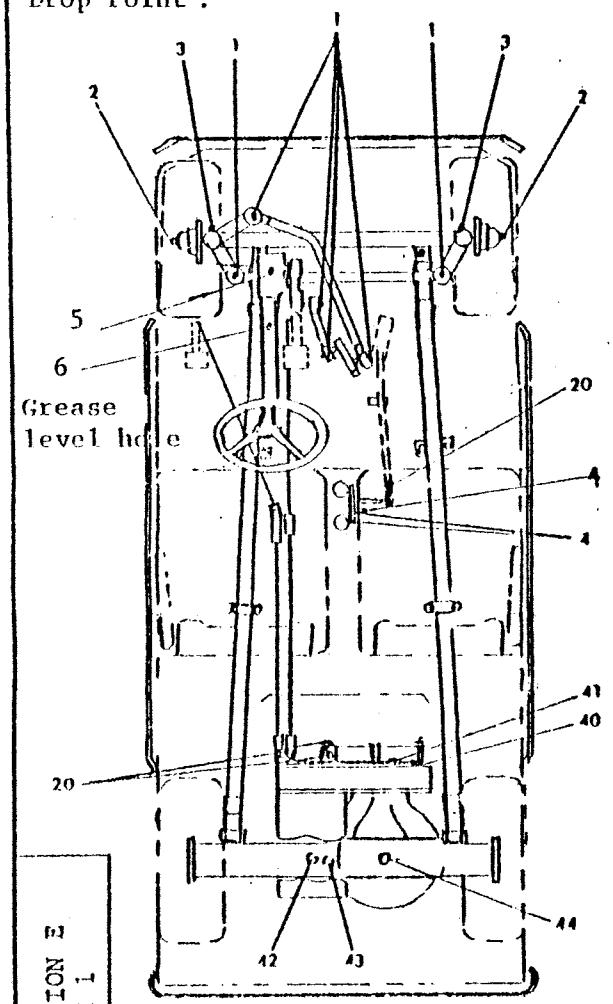

POWER TRACTION DRIVE

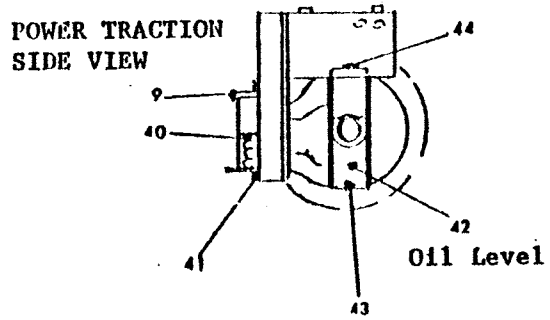

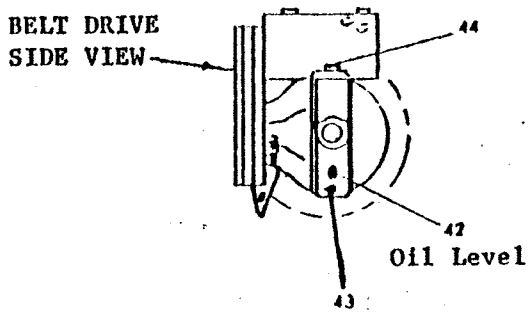

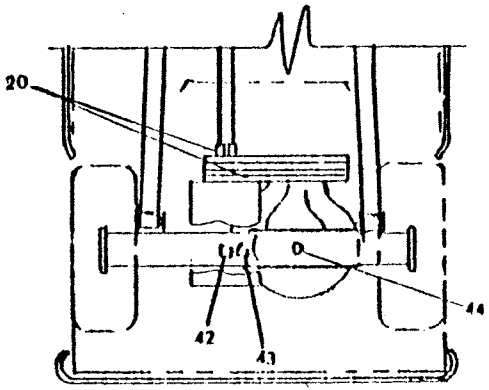

BELT DRIVE

		NO. OF PLACES	FREQUENCY
A.	PRESSURE GUN GREASE		
*	1. Ball Joints	6	3 Month
*	2. Front Wheel Hub	2	3 Months
*	3. Front Wheel	2	3 Month
*	5./6. Steering Gear Box Fill to Grease Level Hole.	1	1 Year
B.	T-D Grease 94-421-00		
*	4. Master Control Switch	4	1 Month or Sooner
C.	ALL PURPOSE ENGINE OIL		
*	20. Linkage Pivot Points	6	1 Month
D.	POWDERED GRAPHITE		
	Key Lock	1	1 Year
E.	SAE 30 OIL-Axle & Differential		
**	42. Level Check	1	(See Below)

*** Change Oil - Power Traction — 3 Year

a. Remove Drain Plugs 41 & 43, Level Plugs 40 and 42, Fill Plug 44.
b. Drain Oil, Replace 41 & 43.
c. Add Oil by 44 to level of 42
d. Add oil by 40 to ½" below 40
e. Replace 40, 42, 44

*** Change Oil - Belt Drive — 3 Year

a. Remove Drain Plug 43, Level Plug 42 and Fill Plug 44
b. Drain oil, replace 43
c. Add oil by 44 to level of 42
d. Replace 44

** Check level whenever oil leakage is evident.

*** Or after service work performed

* Items related to safety recommendations

NO.	DESCRIPTION	LENGTH	QUAN.	REVISED DATE	REVISION

TOL. FRAC. ± DEC. ±
SCALE NONE
DRAWN BY REA
DATE 7-24-81

FIGURE 1
SECTION E

LUBRICATION DIAGRAM

TAYLOR DUNN MFG. CO.
2114 West Ball Rd.
Anaheim, Calif.

SECTION F
PAGE 1

TROUBLE SHOOTING PROCEDURES

SYMPTON	PROBABLE CAUSE	CORRECTIVE ACTION
1. STEERING (SECTIONS E & J1)		
a. Pull in one direction	1. Unbalanced front tire pressure	1. Check and adjust inflation pressures
	2. Bent or maladjusted tie rod	2. Repair, replace, or adjust tie rod
	3. Bent axle or spindle	3. Repair or replace
b. Hard Steering	1. Low tire pressure	1. Inflace to 16-20 lbs.
	2. Dry pivot points in steering linkage	2. Lubricate - See Section E
	3. Bent of maladjusted king pin	3. Repair, Replace, or adjust king pin
c. Sloppy or Loose	1. Loose wheel bearing	1. Adjust
	2. Loose or worn ball joints	2. Tighten or replace ball joints-Section J1
	3. Worn king pin bushings or king pins	3. Replace bushings or pins and bushings
	4. Excess backlash in steering gear box	4. Adjust backlash
	5. Worn idler arm bushings	5. Replace arm and bushings
2. BRAKES (SECTION J2)		
a. Poor Brakes Pedal Pressure Normal or excessive	1. Worn brake lining	1. Adjust for lining wear or replace if less than 1/16 thick
	2. Brake Shoe misaligned	2. Align brake shoe
	3. Brake lining wet or oily	3. Clean or dry lining
	4. Bind in brake linkage	4. Loosen, adjust, or lubricate brake linkage
	5. (Belt drive only) Brake cable attached to wrong place on brake idler arm	5. Change cable attachment to correct place on brake idler arm.
	6. Incorrect linkage adjustment	6. Adjust linkage
	7. Accelerator pedal bushing dry sticking to brake shaft.	7. Lubricate accelerator pedal bushing
b. No Brakes: Pedal reaches floor board	1. Incorrect linkage adjustment	1. Adjust linkage
	2. Incorrect shoe adjustment	2. Adjust Shoe
	3. Broken linkage	3. Repair or replace broken part
	4. Broken brake band	4. Replace Brake band
	5. Broken axle	5. Replace broken axle
c. Excessive or grabbing brakes	1. Small amount of oil on lining	1. Clean lining
	2. Incorrect shoe adjustment	2. Adjust Shoe
	3. (Power Traction only) Brake cable attached to wrong place on brake idler arm	3. Change cable attachment to correct location on brake idler arm
	4. Scored or rough brake drum	4. Refinish or replace brake drum.

SECTION F
PAGE 2

SYMPTON		PROBABLE CAUSE		CORRECTIVE ACTION
3. DRIVE AXLE (SECTION J2)				
a. Erratic operation	1.	Faulty Power System	1.	See "Power System"
	2.	Badly worn drive sprockets or belts.	2.	Replace sprockets or belts
b. Lack of Power: Slow Operating	1.	Faulty Power System	1.	See "Power System"
	2.	(Belt Drive only) Belt slipping or missing	2.	Adjust belt tension or replace belts.
	3.	Hand Parking Brake not completely released	3.	Release Parking Brake
	4.	Incorrect brake adjustment, brake dragging	4.	Adjust brake system
	5.	Defective or maladjusted wheel bearing.	5.	Adjust or replace wheel bearing.
	6.	Bind or drag in primary drive or differential.	6.	Check and repair primary drive or differential.
c. Abnormal Noise in drive train	1.	Defective motor bearing	1.	Replace motor bearing
	2.	Loose motor mount	2.	Tighten motor mount
	3.	Worn or broken sprockets or pulleys.	3.	Replace sprockets or pulleys.
	4.	Worn gears or bearings in differential.	4.	Check and replace gears or bearings.
	5.	Defective Axle Bearing	5.	Replace Bearing.
	6.	Worn or bent axle	6.	Replace Axle
	7.	Loose wheel lug nuts	7.	Tighten lug nuts.
	8.	Defective spring eye bushings	8.	Replace bushings
d. Oil Leaks in wheel bearing area.	1.	Wheel bearing seal defective.	1.	Replace seal
	2.	Wheel bearing gasket defective.	2.	Replace gasket
	3.	Axle retainer plate not tightened	3.	Tighten axle retainer plate
	4.	Drive axle filled above proper oil level	4.	Drain oil to proper level
e. Oil leaks in pinion shaft and brake drum area	1.	Pinion shaft seal defective	1.	Replace seal
	2.	Brake drum hub scored or worn in seal area	2.	Refinish drum hub or replace drum.
	3.	Gear case cover not aligned with pinion shaft.	3.	Reposition cover to align with shaft.
	4.	Pinion shaft bearing adjusted too loosely	4.	Readjust bearing to proper tension
	5.	Drive axle filled above proper oil level	5.	Drain oil to proper level
	6.	Oil return orifice in gear case back plate blocked	6.	Clear block in back plate
f. Oil Leaks in gear case or motor area	1.	Defective gear case cover gasket	1.	Replace gasket
	2.	Motor mount 'O' ring seal defective or missing	2.	Install 'O' ring seal
	3.	Defective motor bearing oil seal.	3.	Replace oil seal

SECTION F
PAGE 3

SYMPTOM	PROBABLE CAUSE	CORRECTIVE ACTION
4. POWER SYSTEM (SECTIONS J6,J8,G)		
a. No Power to motor in forward or reverse	1. Batteries discharged or defective. 2. EM Master Control Switch 3. Forward-Reverse Switch maladjusted or worn. 4. Motor brushes not contacting armature 5. Loose or broken wire 6. Motor defective	1. Recharge or replace batteries 2. Adjust or repair Switch, refer to Sect. J6 3. Adjust or repair forward/reverse contacts. 4. Adjust or replace brushes 5. Tighten or replace wire. 6. Repair or replace motor
b. Erratic Operation	1. Batteries discharged 2. EM Master Control Switch 3. Forward/reverse switch maladjusted or worn 4. Loose wire or wires 5. Motor brushes worn	1. Recharge batteries 2. Adjust or repair switch. Refer to Sect. J6 3. Adjust or repair Forward/reverse contacts 4. Tighten 5. Replace brushes.
c. Vehicle range below normal	1. Batteries not fully charged. 2. Batteries nearing end of normal life 3. Charger output not sufficient 4. Charger defective	1. Recharge batteries. Review charging practice. 2. Replace batteries 3. Adjust transformer taps 4. Repair or replace charger.
d. No power in one direction and full power in other direction without depressing accelerator	1. Switching and motor circuit not properly connected	1. Correct power circuit wiring to diagrams in Section G.

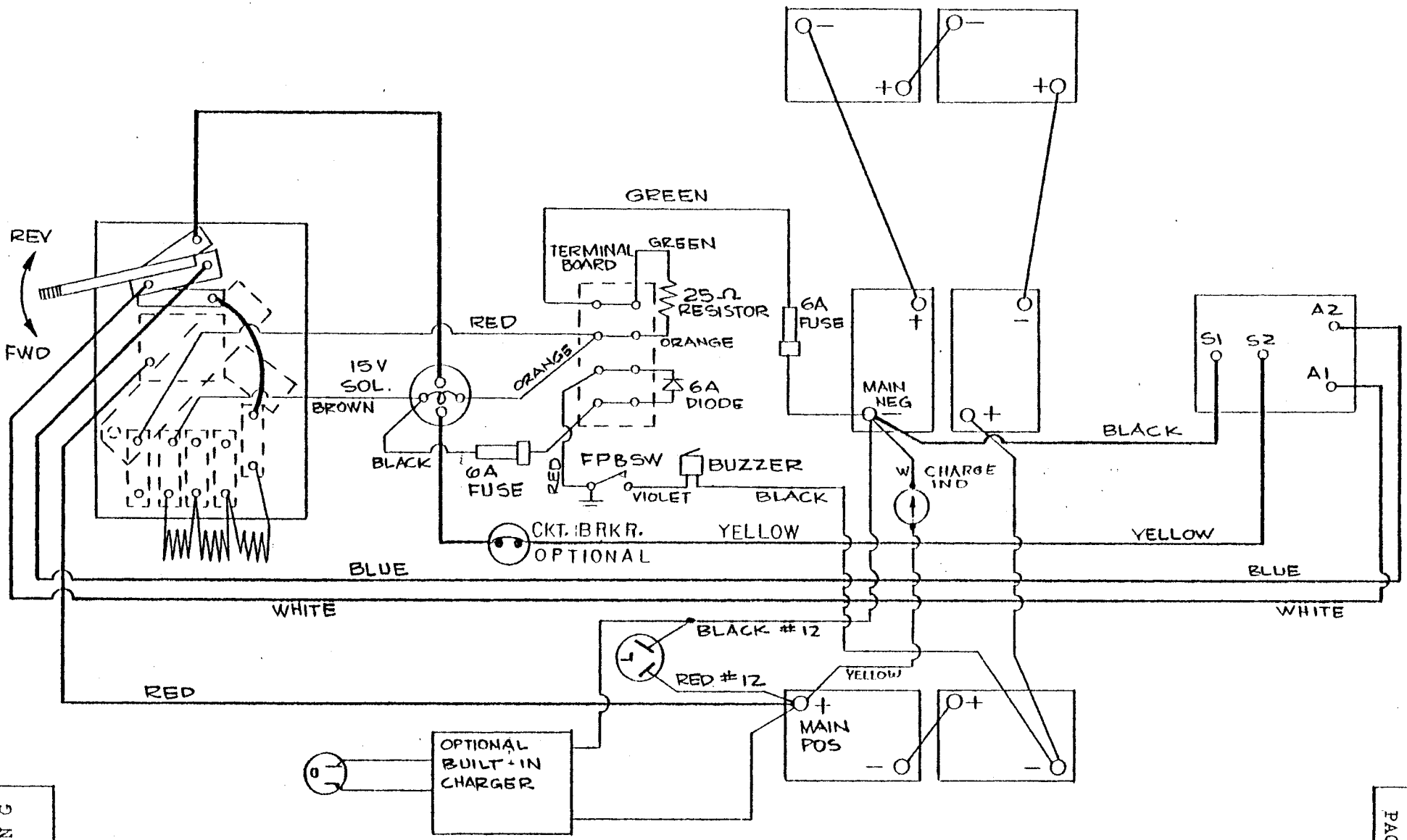

SECTION G
PAGE 1

SECTION G
PAGE 1

DRAWN BY J.M.
DATE 12-2-80

FIGURE 2A
SECTION G

EM MASTER CONTROL SWITCH
WIRING DIAGRAM

TAYLOR DUNN MFG. CO.
2114 West Ball Rd.
Anaheim, Calif.

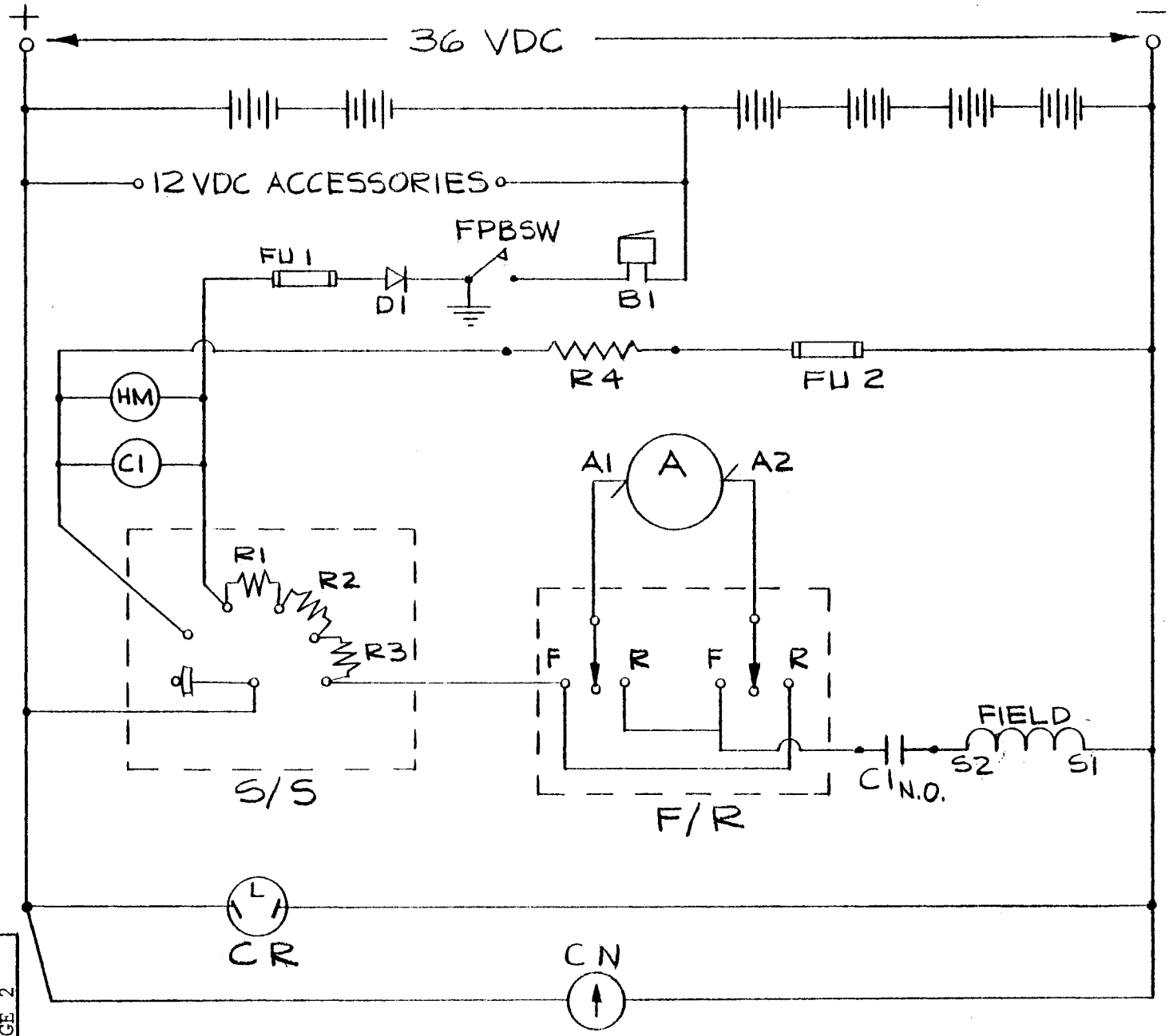

LEGEND

A	MOTOR ARMATURE
BI	BUZZER
CI	SOLENOID/CONTACTOR
DI	DIODE
FPBSW	FOOT PARK BRAKE SWITCH
FUI	FUSE, BUZZER
FU2	FUSE, SOLENOID
RI-R3	RESISTOR, POWER
R4	RESISTOR, SOLENOID
CR	CHARGER RECEPTACLE
HM	HOUR METER (OPTIONAL)
F/RS	FORWARD/REVERSE SWITCH
S/S	SPEED SWITCH
CN	CHARGE IND

SECTION G
PAGE 2

DRAWN BY J.M.
DATE 8-18-80

FIGURE 2B
SECTION G

EM MASTER CONTROL SWITCH
WIRING SCHEMATIC

TAYLOR DUNN MFG. CO.
2114 West Ball Rd.
Anaheim, Calif.

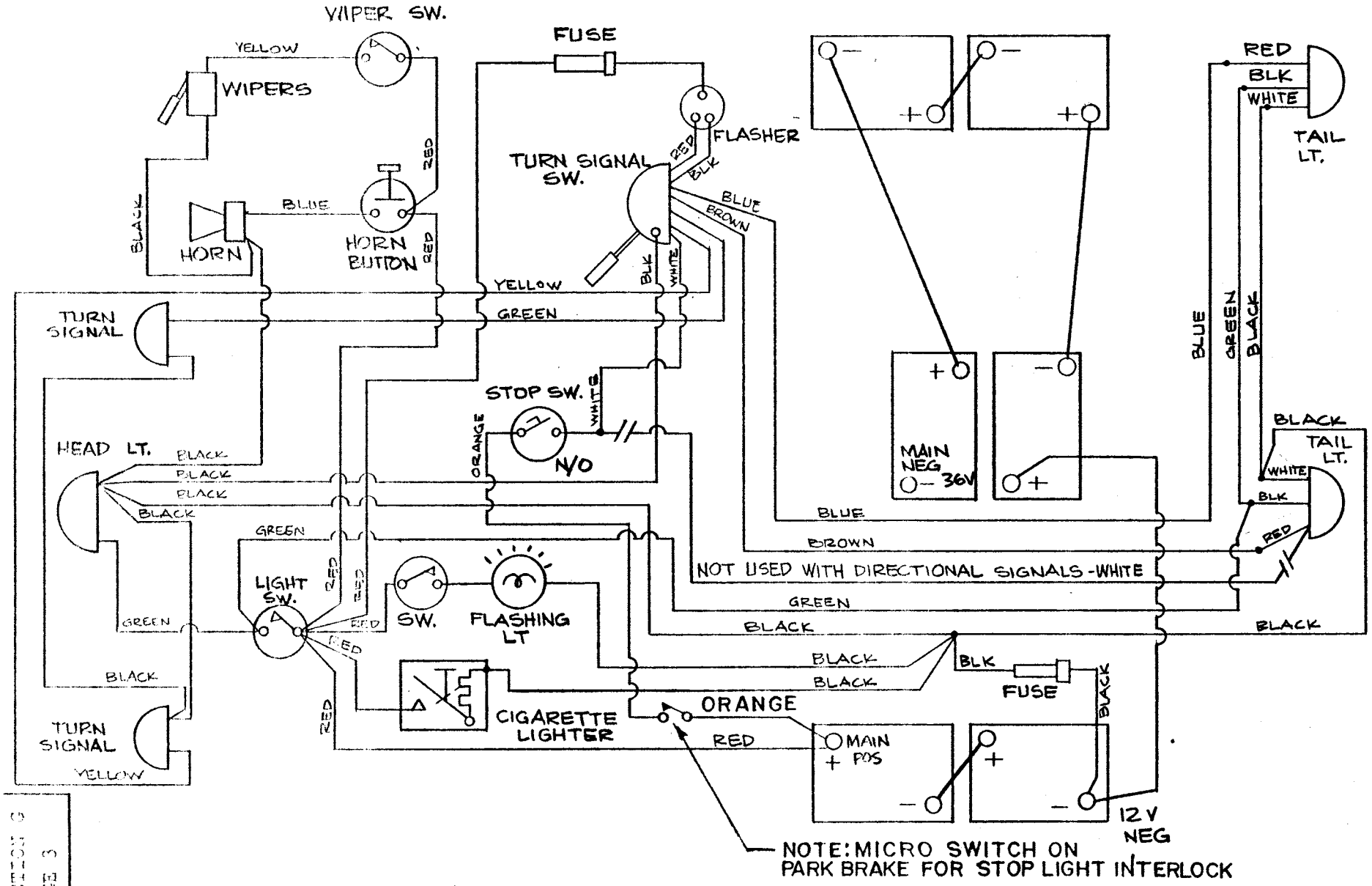

SECTION G
PAGE 3

REVISED 11-5-81

FIGURE 2C
SECTION G

ACCESSORY WIRING DIAGRAM

DRAWN BY J.M.
DATE 12-13-79

TAYLOR DUNN MFG. CO.
2114 West Ball Rd.
Anaheim, Calif.

SECTION G
PAGE 3

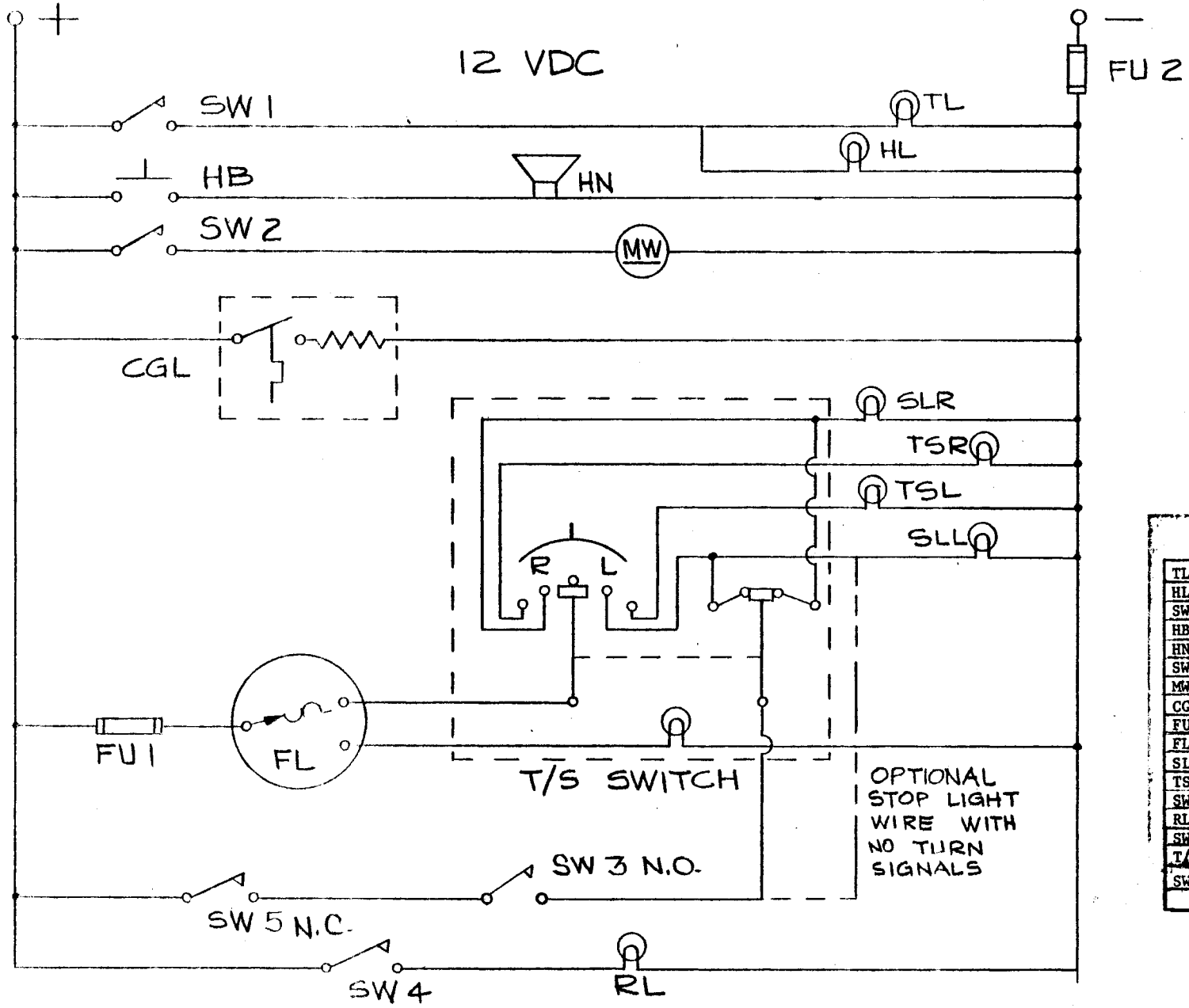

LEGEND

TL	TAIL LIGHT
HL	HEAD LIGHT
SW1	SWITCH (LIGHT)
HB	HORN BUTTON
HN	HORN
SW2	SWITCH (WINDSHIELD WIPER)
MW	MOTOR (WIPER)
CGL	CIGARETTE LIGHTER
FU1	FUSE (TURN SIGNALS)
FL	FLASHER
SLR/L	STOP LIGHTS, RIGHT & LEFT
TSR/L	TURN INDICATORS, RIGHT & LEFT
SW3	SWITCH (STOP LIGHTS)
RL	ROTATING LIGHT
SW4	SWITCH, (ROTATING LIGHT)
T/S	TURN SIGNAL SWITCH
SW5	SWITCH (STOP RIGHT) PK.BRK

REVISED 11-5-81

SCALE	FIGURE 2D	ACCESSORY WIRING SCHEMATIC
DRAWN BY J.M.	SECTION G	
DATE 8-18-80		

TAYLOR DUNN MFG. CO.
2114 West Ball Rd.
Anaheim, Calif.

SECTION H
PAGE 1

PARTS ORDERING PROCEDURE

Parts may be purchased from your local authorized Taylor-Dunn Dealer. When ordering parts, be sure to specify the complete model number and serial number of the unit. Also specify the full Taylor-Dunn part number, description of part, and quantity of parts required. You will find a complete listing of part numbers and descriptions in the following pages of this manual. When ordering parts for the drive motor, also include the specifications found on the motor nameplate. Be sure to give complete shipping and billing address on all orders. EXAMPLE:

1 - Part Number 86-501-98 - Ball Joint (Left Hand Thread)

1 - Set of 4 - Part number 70-124-00 - Motor Brushes for Baldor Motor, 3½ H.P., 36 Volt, Specification Number 28-1408-11704

Above parts for Model 1248 B Truck, Serial Number 15039.

Parts ordered under warranty must be placed with your authorized Taylor-Dunn Dealer. Be sure to include original invoice number, date of shipment and vehicle serial number.

NOTE: On contracts with National Federal Government Agencies, Defence General Supply Agency, and the United States Post Office Department, orders for all warranty parts must be placed directly with the Taylor-Dunn factory in Anaheim, California.

Illustrated Parts List

SECTION I
PAGE 1

SUGGESTED SPARE PARTS LIST

FIG. I.D. NO.	T-D PART NO.	DESCRIPTION	NO. OF CARTS 1-20	21-50	50-up
REFER TO FIGURE 4 - FRONT AXLE, WHEELS, AND STEERING					
4-68	45-338-00	Oil Seal for 1" Bearing	1	2	4
4-72	97-236-00	Lug Nut - 1/2" NF	0	10	10
4-78	13-746-00	Tire and Demountable Wheel, 18 x 850 x 8, 4 Ply	1	2	4
4-84	11-041-00	Tube for 18 x 850 x 8 or 18 x 950 x 8 Tubeless Tire	1	2	4
REFER TO FIGURE - 5 REAR AXLE, MOTOR, AND BRAKES FOR VEHICLES WITH EITHER POWER TRACTION OR BELT DRIVE					
5-3	41-997-00	Drain and Level Plug (1/8" Pipe)	2	2	2
5-6	96-331-00	Bolt - 1/2" NF (SPEC.) Rear Hub	5	10	10
5-11	41-160-11	Assembly,Axle, Rear 22-3/8" Long Including studs, with retaining plate, retaining ring & small bearing W/gasket	0	1	1
5-11	41-161-11	Assembly, Axle, Rear 13-1/4" Long Including studs, with retaining plate, retaining ring & small bearing w/gasket	0	1	1
5-11	41-164-11	Assembly, Axle, Rear 22-3/8" Long including studs, with retaining plate, retaining ring & large bearing with gasket and 45-301-00 Oil Seal	0	1	1
5-11	41-165-11	Assembly, Axle, Rear 13-1/4" Long including studs, with retaining plate, retaining ring & large bearing with gasket and 45-301-00 Oil Seal	0	1	1
(Not Shown)	45-301-00	Oil Seal, Inner for 41-164-11 & 41-165-11 Axle Assemblies	5	10	10
5-16	97-236-00	Lug Nut, 1/2" N.F.	5	10	10
5-57	41-989-00	Plug (Filler Level & Drain) 1/2" NPT	2	2	2
5-73	85-060-00	Compression Spring 5/8 O.D. x 2-1/2 Long	2	4	6
5-87	70-049-00	Motor 1.5/2 HP - 4 Terminals 5BC48JB550	0	0	1
5-87	70-054-00	Motor 2.25/3.5 HP - 4 Terminals 5BC49JB305	0	0	1
	70-101-00	Brushes for G.E. Motor Models 5BC48JB503, 5BC48JB550, 5BC49JB305 - 4 per motor	4	8	16
	45-506-00	Oil Seal, Motor	0	1	2

SECTION I
PAGE 2

SUGGESTED SPARE PARTS LIST
(CONT'D)

FIG. I.D. NO.	T-D PART NO.	DESCRIPTION	NO. OF CARTS 1-20	21-50	50-up
	80-504-00	Ball Bearing, G.E. Motor, Pulley End	0	1	1
	80-200-00	Ball Bearing, G.E. Motor, Commutator End	0	1	1
5-106	45-044-00	Gasket, Rear Wheel Bearing (Small)	0	2	2
5-106	45-045-00	Gasket, Rear Wheel Bearing (Large)	0	2	2
REFER TO FIGURE 5 - REAR AXLE, MOTOR, AND BRAKES FOR VEHICLES WITH POWER TRACTION ONLY					
5-61	85-270-00	Extension Spring 1-1/4" O.D. X 4-3/8 Free Length	2	4	4
5-63	45-331-00	Oil Seal, Chain Case Cover	1	2	4
5-64	41-532-00	Brake Drum (Splined)	0	1	1
5-66	41-661-61	Full Brake Band Kit for 6" Drum	1	2	4
5-81	30-080-00	Sprocket - 15 Tooth x 3/4" Bore	0	1	1
5-83	45-002-00	Gasket - Chaing Case Cover	0	1	1
REFER TO FIGURE 5A - REAR AXLE, MOTOR, AND BRAKES FOR VEHICLES WITH BELT DRIVE ONLY					
5A-5	45-339-00	Oil Seal, Drive Pinion Shaft, 3" O.D.	1	2	4
5A-5	45-340-00	Oil Seal, Drive Pinion Shaft, 4-1/8 O.D.	1	2	4
5A-9	30-625-00	Belt, 3V470 (4 Per Cart)	0	4	8
5A-28	41-661-61	Brake Band Kit, Lined Brake Band, Anchor	1	2	4
REFER TO FIGURE 7 - MECHANICAL CONTROL LINKAGE					
7-1	98-200-00	Brake Pedal Pad	0	1	2
7-5	85-233-00	Spring, Extension, Accelerator Return	2	4	6
7-8	96-771-00	Clevis Pin, 3/8 x 3/4 Face to Hole	1	3	6
7-10	96-773-00	Clevis Pin, 5/16 x 3/4 Face to Hole	1	1	1
REFER TO FIGURE 9 - EM MASTER CONTROL SWITCH					
9-0	61-845-45	Master Control Switch Assembly Complete	0	1	2
9-2	61-831-10	Power Bar w/countersunk hole	1	2	2
9-3	61-831-12	Power Bar w/notch	1	2	5
9-4	61-831-13	Power Bar	3	6	15
9-6	61-831-20	Speed Contact Bar	1	2	2
9-7	61-840-00	Forward Reverse Power Bar	1	2	4
9-9	61-846-50	Rotor Board	1	2	4
9-11	61-841-00	Handle	1	2	4
9-12	71-030-58	Contact Button	2	4	4
9-13	61-849-50	Contact Button	2	4	6
9-14	61-849-55	Rotor Arm	0	1	2
9-15	88-102-11	Neutral Button (3/8 x 1 Carriage Bolt)	1	2	4
9-18	78-212-63	Resistor Coil #5 Wire - 6 Turns	1	1	2
9-20	78-212-51	Resistor Coil #9 Wire - 10 Turns	1	1	2
9-23	97-170-00	Washer, Insulated	2	4	8

SECTION I
PAGE 3

SUGGESTED SPARE PARTS LIST
(CONT'D)

FIG. I.D. NO.	T-D PART NO.	DESCRIPTION	NO. OF CARTS 1-20	21-50	50-up
REFER TO FIGURE 9 - MASTER CONTROL SWITCH - EM TYPE (CONT'D)					
9-24	32-212-50	Plastic Bushing, 1/4 I.D. X 1/4 Long	2	4	8
9-25	96-300-09	Bronze Bolt	1	2	4
9-32	78-212-62	Resistor Coil #8 Wire - 8 Turns	1	1	2
9-54	96-302-01	Screw, Bronze 5/16 N.C. x 1, Hex Hd.	1	2	4
REFER TO FIGURE 11 - BODY AND TRIM PARTS					
11-14	91-402-00	Accessory Tray	1	2	4
11-15	91-405-00	Ash Tray, Glass	2	4	8
11-32	92-001-00	Wheel Cover, Chrome, 6"	2	2	2
PARTS NOT ILLUSTRATED					
	94-400-00	Mirror Glaze (For Cleaning Plastic Windows - 8 Oz.)	1	1	1
	76-002-00	Charging Plug, 30 Amp, 3 Prong	3	6	8
	76-012-00	Charging Receptacle, 3 Prong, 30 AMP	3	6	8
	77-200-00	Hydrometer (To Check Battery Charge)	2	2	4
	77-201-00	Battery Filler	1	1	1
	79-320-00	Charger, 36V, 20 AMP, Automatic, with clock (portable)	0	1	1
	79-333-00	Charger, 36V, 30 AMP, Transistorized (Portable)	0	1	1
	79-819-00	Fuse, 30 AMP, Screw Type	10	20	20
	75-231-00	Battery Jumper, #6 Wire 10-1/4" Long (3 per cart)			
	75-234-00	Battery Jumper, #6 Wire, 18-1/4" Long (2 per cart)			

SECTION J1
PAGE 1

MAINTENANCE PROCEDURES
FRONT AXLE, STEERING AND TIRES
REFER TO FIGURE 4

Axle

Your front axle and wheel assembly consist of an axle mounted on 2 leaf springs with automotive spindles, steering worm, and steering linkage. It has been designed for rugged dependable service with little maintenance requirements, other than lubrication and an occasional check of all nuts and bolts for tightness. Your wheels revolve on Timken Roller Bearings and the spindles are mounted with heavy kingpins.

The steering idler rotates on self lubricating bearings mounted on a corossion resistant shaft. No lubrication is necessary. Should the bearings become worn, they can easily be replaced.

Zerk type grease fittings have been provided to insure proper amounts of lubricant reaching wear points.

It is recommended that you follow the maintenance guide and lubrication diagrams for normal maintenance of the assembly. They are located in Sections D and E of this manual.

The maintenance guide is set up for average use. If the vehicle is subject to long hours of running and heavy loads the frequency of lubrication and service should be increased accordingly.

Refer to the service and adjustment Section J1 of this manual for guidance when performing major repairs and adjustments.

Steering and Suspension

The steering worm gear box and steering linkage are similar to that used on autos. They require very little attention.

Refer to maintenance guide and lubrication diagrams (Sections D & E) for normal care.

If service and adjustments are required, refer to appropriate section of this manual.

When performing underbody front end maintenance, check spring shackle bolts and U-bolts, and tighten if necessary. This will assure good steering control and minimum wear.

Tire Care

Tire pressure is governed by how you want your vehicle to ride and the terrain upon which it is most commonly used. Slightly lower pressure will assist traction on soft terrain without undue wear.

The tire pressure chart below assist you to determin the correct tire pressures for your needs. The higher range of pressures are recommended for heavy loads:

18 x 8.50 x 8 4 Ply 18 to 22 lbs.

18 x 9.50 x 8 4 Ply 18 to 22 lbs.

CAUTION: Do not over inflate tires. This will promote increased wear. Under inflated tires on hard surfaces also promotes wear and should be avoided. Over inflation can be detected by observing the tread wear depth over a period of time and will show up as greater reduction of tread depth in center portion of tread when compared with tread depth near tire edge.

SERVICE AND ADJUSTMENT
FRONT AXLE, STEERING AND TIRES
REFER TO FIGURE 4

Remove and Install Wheel Hub: Adjust Bearings

1. Remove wheel cover.
2. Remove dust cap.
3. Remove cotter pin and unscrew spindle nut.
4. Remove outer washer and bearing.
5. Remove wheel, tire, and hub assembly.
6. Before re-assembly, thoroughly clean the bearings, spindle, and hub assembly. Inspect bearings for wear or damage. Examine inner seal. Replace damaged or worn parts.
7. Generously pack bearings with wheel bearing grease.
8. Reassemble in reverse order. Adjust wheel bearings before installing cotter pin.
9. Adjust wheel bearings by tightening spindle nut until bearing drag barely occurs, then back off spindle nut approximately 1/4 turn. Wheel should turn freely without noticable bearing end play.
10. Install cotter pin, dust cap and wheel cover.
11. Wheel hub has one zerk fitting for periodic lubrication of bearings without disassembling hub. Refer to Lube Chart in Section E.

Remove and Install King Pin Bushings

1. Remove wheel and hub from spindle. See preceding subsection.
2. Remove ball joints from steering arms. Remove cotter pin and nut, rap stud sharply with soft hammer, or soft block and regular hammer, to loosen tapered stud from steering arm.
3. Remove 7/8 lock nut which retains spindle and steering arm assembly to kingpin.
4. Remove spindle and steering armaassembly from kingpin.
5. Press bushings from spindle and steering arm assembly.
6. Thoroughly clean bushing housing and kingpin before installing new bushings.
7. Press bushings into sleeve. It may be necessary to ream the bushings after they are installed in the sleeve, because of slight distortion which may occur during the process of pressing them into place. If proper press and reamer are not available, most automotive supply houses and repair shops have capacity to perform this service.
8. Reassemble in reverse order. Tighten ball joint clamps securely. Lubricate bushings and kingpin through grease fitting. Adjust wheel bearings as described in preceding subsection. Align front end as described in sub-section titled "Align Front End: Adjust Toe In".

Align Front End: Adjust Toe In

1. Caster and camber are set at the factory, and do not require adjustment. To adjust toe-in, raise front end of vehicle off the ground.
2. With a pencil, make a mark around center of tread of tire by holding pencil point against tire while turning wheel. Mark both front tires.
3. Lower vehicle to ground. Loosen tie-rod sleeve clamps at each end of tie-rod, so that adjusting sleeve can be turned.
4. With wheels in straight forward direction, measure the distance between pencil lines at the front of the tires, and at the rear of the tires.
5. Adjust the tie-rod sleeve until the distance from mark to mark across the front of the tires is the same as the distance from mark to mark across the rear of the tires.
6. Tighten the adjusting sleeve clamp nuts securely, taking care to avoid changing the position of the adjusting sleeve.

SECTION J1
PAGE 3

Replace Ball Joint:

1. Remove cotter pin and nut.
2. Loosen sleeve clamp.
3. Rap ball joint stud sharply with soft hammer or soft block and regular hammer to loosen tapered stud from steering arm.
4. Either measure position of ball joint or count number of threads exposed from sleeve. Remove ball joint by unscrewing from sleeve. Note that one end will be left hand thread and the opposite ball joint will be right hand thread.
5. Install new ball joint and position same as the one removed.
6. Install tapered stud in steering arm or gear lever arm.
7. Replace nut, tighten securely and replace cotter pin.
8. If ball joint replaced is part of the tie rod, check toe-in, and adjust, if necessary, as described in sub-section titled "Align Front End".
9. If ball joint replaced is part of the linkage from gear lever arm to steering arm, check relative positions of steering wheel and road wheels. Steering wheel spoke should be in the six o'clock position when the road wheels are in the straight forward position. Adjust by rotating the adjusting sleeve until the desired relationship is obtained.
10. Tighten both sleeve clamps securely.
11. Lubricate ball joint through zerk fitting. Refer to Lube Chart in Section E.

Remove and Replace Steering Worm Assembly:

1. Remove two screws which retain score card pad, and remove score card pad. Pry cap from steering wheel hub, exposing locknut.
2. Remove steering wheel locknut, and with suitable puller, remove steering wheel from shaft.
3. Disconnect ball joint and sleeve assembly from steering gear lever arm. Remove cotter pin and nut, rap ball joint stud sharply with soft hammer, or soft block and regular hammer, to loosen tapered stud.
4. Remove steering column clamp.
5. Remove two bolts which retain steering worm housing to frame, and remove steering worm gear and steering column assembly from bottom of vehicle.
6. Should it be necessary to remove the gear lever arm from the shaft, note the position of the gear lever arm with respect to the indicating mark on the end of the shaft for proper positioning at assembly.
7. Install in reverse order. When assembling steering wheel to shaft, first position the front wheels in a straight forward direction, then install steering wheel with one of the spokes as close to the six o'clock position as the splines will allow. Final adjustment can be made by lengthening or shortening the ball joint and adjusting sleeve assembly. Tighten steering wheel lock nut, and tighten adjusting sleeve clamps if they were loosened in order to make adjustment.
8. Check steering to determin if wheels will turn an equal amount in either direction. If this is not the case, it will be necessary to re-position the gear lever arm on the steering worm output shaft. This may in turn require repositioning the steering wheel to obtain the desired six o'clock spoke condition.
9. Lubricate steering worm through the zerk fitting located on the steering worm housing. Refer to the Lube Chart in Section E.

Replacement of Steering Idler Bushings

1. Remove steering idler shaft lock nut.
2. Unscrew shaft from inner nut, and remove shaft bushings, washer, and inner nut.
3. Reassemble in reverse order with the shaft head and lock nut on the outboard sides of the chassis members which retain the assembly and with the washer between the inboard nut and the bushing.

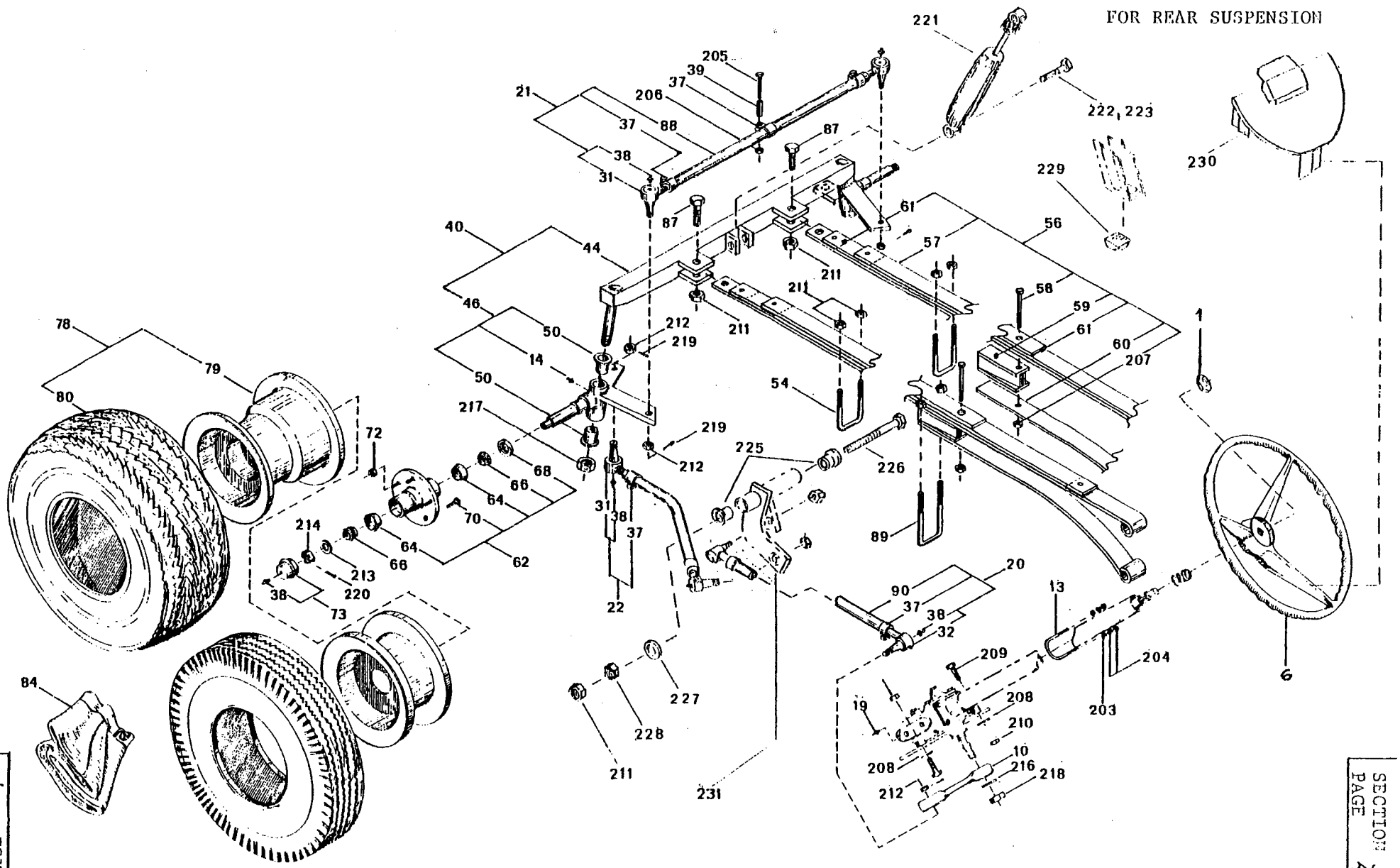

SECTION J1
PAGE 4

SECTION J1
PAGE 4

DRAWN BY EA DATE 8-20-79	FIGURE 4 SECTION J1	FRONT AXLE, TIRES, STEERING, AND SUSPENSION

TAYLOR DUNN MFG. CO.
21' West Ball Rd.
Anaheim, Calif.

SECTION J1
PAGE 5

FRONT AXLE, WHEELS, AND STEERING
REFER TO FIGURE NO. 4

FIG. I.D. NO.	T-D PART NO.	DESCRIPTION	QTY. REQ.
		NOTE: REFER TO SECTION J1A FOR STEERING WORM ASSEMBLY INFORMATION AND PARTS LISTINGS	
4-1	88-259-82	Nut, Jam 13/16 Hex Head, NF	1
4-6	19-003-20	Wheel, Steering, Deluxe Splined Hub, Black	1
4-10	18-107-00	Steering Lever, Splined, 7-1/2 Long	1
4-13	96-099-00	U-Bolt, 5/16 N.F. Thread	
4-14	87-071-00	Grease Fitting - 3/16 Drive Type	2
4-19	87-073-00	Grease Fitting, 45° , 3/16 Drive Type	1
4-20	18-035-10	Steering Adjustment Sleeve Assembly, with Ball Joints and clamp - 11" Sleeve	1
4-21	18-047-10	Steering Adjustment Sleeve Assembly, with Ball Joints and Clamps - 18" Sleeve	1
4-22	18-029-11	Steering Adjustment Sleeve Assembly, with Ball Joints and Clamps - 13",40° Bend	1
4-31	86-501-98	Ball Joint - 1/2" Thread on Tapered End, Left Hand	3
4-32	86-501-99	Ball Joint - 1/2" Thread on Tapered End, Right Hand	3
4-37	86-510-00	Ball Joint Clamp	7
4-38	87-074-00	Grease Fitting - 1/4 - 28 NF - Straight	8
4-39	16-801-00	Towing Spacer - 1/4 x 1-1/4 Long	1
4-40	15-066-10	Front Axle Assy., Complete, with King Pins, Spindles, Hubs and Tie Rod	1
4-44	15-066-00	Front Axle with King Pins; less Spindles, Hubs, and Tie Rod	1
4-46	14-157-98	Assy., Spindle, Left Front not used w/Front Wheel Brakes	1
4-46	14-157-99	Assy., Spindle, Right Front Not used w/Front Wheel Brakes	1
4-50	32-200-00	Bushing - Bronze, Oil Impregnated, with Flange 7/8" ID x 1" OD for Spindles	4
4-54	96-120-00	U-Bolt, 1/2 NC, 1-7/8 ID x 2 Long	2
4-56	85-504-10	Leaf Spring Assy., 61-7/8 Ctr. of Eye to Hole, with Torque Leaf and Spacer	2
4-58	96-098-00	Spring Center Bolt - 3/8 NF x 3-3/4	2
4-59	85-504-52	Spacer - Leaf Spring	2
4-61	85-504-54	Spring Tip Pad for 1-3/4 Wide Leaf	6
4-62	12-124-00	Wheel Hub - 2-3/4" Long, Five 1/2" Studs on 4-1/2" Bolt Circle with Two 1" Bearing Races, One Bearing, One Oil Seal.	2
4-64	80-103-00	Tapered Bearing Race for 1" Bearing	4

SECTION J1
PAGE 6

FIG. I.D. NO.	T-D PART NO.	DESCRIPTION	QTY. REQ.
4-66	80-017-00	Tapered Roller Bearing - 1" ID	4
4-68	45-338-00	Oil Seal for 1" Bearing	2
4-70	96-329-00	Lug Bolt - 1/2" NF	10
4-72	97-236-00	Lug Nut, Tapered, 1/8 NF	10
4-73	92-104-00	Dust Cap with Grease Fitting	2
4-78	13-746-00	Tire and Demountable Wheel 18 x 850 x 8, 4 Ply Terra Tire, Power Rib, Tubeless	2
4-79	12-020-00	Wheel, Demountable for 18 x 850 x 8 or 18 x 950 x 8Tire	2
4-80	10-093-00	Tire, 18 x 850 x 8, 4 Ply, Terra Power Rib, Tubeless	2
4-84	11-041-00	Tube (Optional) for 18 x 850 x 8 or 18 x 950 x 8 Tire	2
4-87	96-316-00	Bolt, 1/2 NC x 3, All Thread	2
4-88	18-047-00	Steering Adjustment Sleeve, 18" Long	1
4-89	96-118-00	U Bolt - 1/2 NC x 1-7/8 ID x 6-1/4 Long	2
4-90	18-035-00	Steering Adjustment Sleeve, 11" Long	1
4-203	88-088-62	Lock Washer, 5/16	2
4-204	88-099-80	Hex Head Nut, 5/16 NF	4
4-205	88-080-18	Screw, 5/16 x 2-1/2 NC Hex Head Cap	1
4-206	88-089-81	Nut, 5/16 Hex Lock	1
4-207	88-119-80	Nut, 3/8 NF Hex Head	2
4-208	88-128-60	Washer, 7/16	3
4-209	88-130-14	Screw, 7/16 x 1-1/2 NF Hex Head Cap	2
4-210	88-130-86	Nut, 7/16 NF Hex Lock, Fiber Insert	2
4-211	88-149-81	Nut, 1/2 NC Lock	10
4-212	88-159-85	Nut, 1/2 - 20 NF Slotted Hex	6
4-213	88-228-60	Washer, 3/4 SAE	2
4-214	88-239-85	Nut, 3/4 NF Slotted Hex	2
4-216	88-268-62	Lock Washer, 7/8	1
4-217	88-279-81	Nut, 7/8 NF Lock	2
4-218	88-279-82	Nut, 7/8 NF Hex Head Jam	1
4-219	88-527-11	Cotter Pin, 1/8 x 1	6
4-220	88-527-14	Cotter Pin, 1/8 x 1-1/2	2
4-221	86-003-00	Shock Absorber with Rubber Cushion Stop	1
4-222	88-120-17	7/16 NC x 2-1/4 Long Hex Head Cap Screw	1
4-223	88-129-81	7/16 Lock Nut	1
4-224	88-149-81	1/2 NC Lock Nut	1
4-225	32-215-00	Plastic Flanged Bearing	2
4-226	50-004-00	1/2 x 8 Stainless Steel Shaft, Threaded Each End	1
4-227	88-148-61	1/2" SAE Washer	11
4-228	88-149-80	1/2 NC Hex Head Nut	1
4-229	98-753-00	Rubber Cushion, Frame to Spring	2
4-230	91-511-00	Black Plastic Score Card Holder, Steering Wheel	1
4-231	00-370-14	Idler Arm, Steering	1

SECTION J1A
PAGE 1

SERVICE AND ADJUSTMENT
STEERING WORM ASSEMBLY
REFER TO FIGURE 4A

DISASSEMBLE AND REASSEMBLE STEERING WORM

1. Remove 4 bolts from cover and slide steering arm shaft assembly and cover from housing.

2. Mark position of steering column jacket tube clamp for proper reassembly.

3. Loosen steering column jacket tube clamp, and slide jacket tube off of housing and steering column shaft.

4. Remove 4 bolts from housing worm bearing cap and remove steering column worm and shaft assembly.

5. Clean all parts and flush out housing with suitable degreasing solvent. Lightly oil all parts for reassembly.
   NOTE: If installing new steering column shaft and worm assembly, worm bearings, or worm bearing cups, it will be necessary to check the worm bearing preload.

6. To check worm bearing preload, install the steering column worm and shaft assembly, bearings, bearing cups, bearing cap and original shims.

7. Tighten 4 bolts to 18-22 ft. lbs. torque.

8. Shaft and worm must not have any bearing looseness or "play" and should not rotate with less than 1-1/4" lbs. torque nor require more than 4-1/2" lbs. of torque.

9. Add or take away shims as needed to produce the desired bearing preload.

10. Inspect steering arm shaft seal and cover gasket. Replace if worn or damaged.

11. Install steering arm shaft and cover assembly. Tighten four cover bolts to 18-22 ft. lbs. torque. NOTE: With steering arm shaft positioned at the center of its travel, there must be no backlash with mating worm and roller. Total preload for assembled unit must be no less than 5-3/4" lbs. torque measured at steering worm shaft not more than 11-1/4" lbs.

12. Adjust total preload to proper limits by loosening locknut on backlash adjusting screw located in cover and turning adjusting screw clockwise to increase preload and counterclockwise to decrease preload. Retighten lock nut securely.

13. Replace steering column jacket tube and clamp in original position.

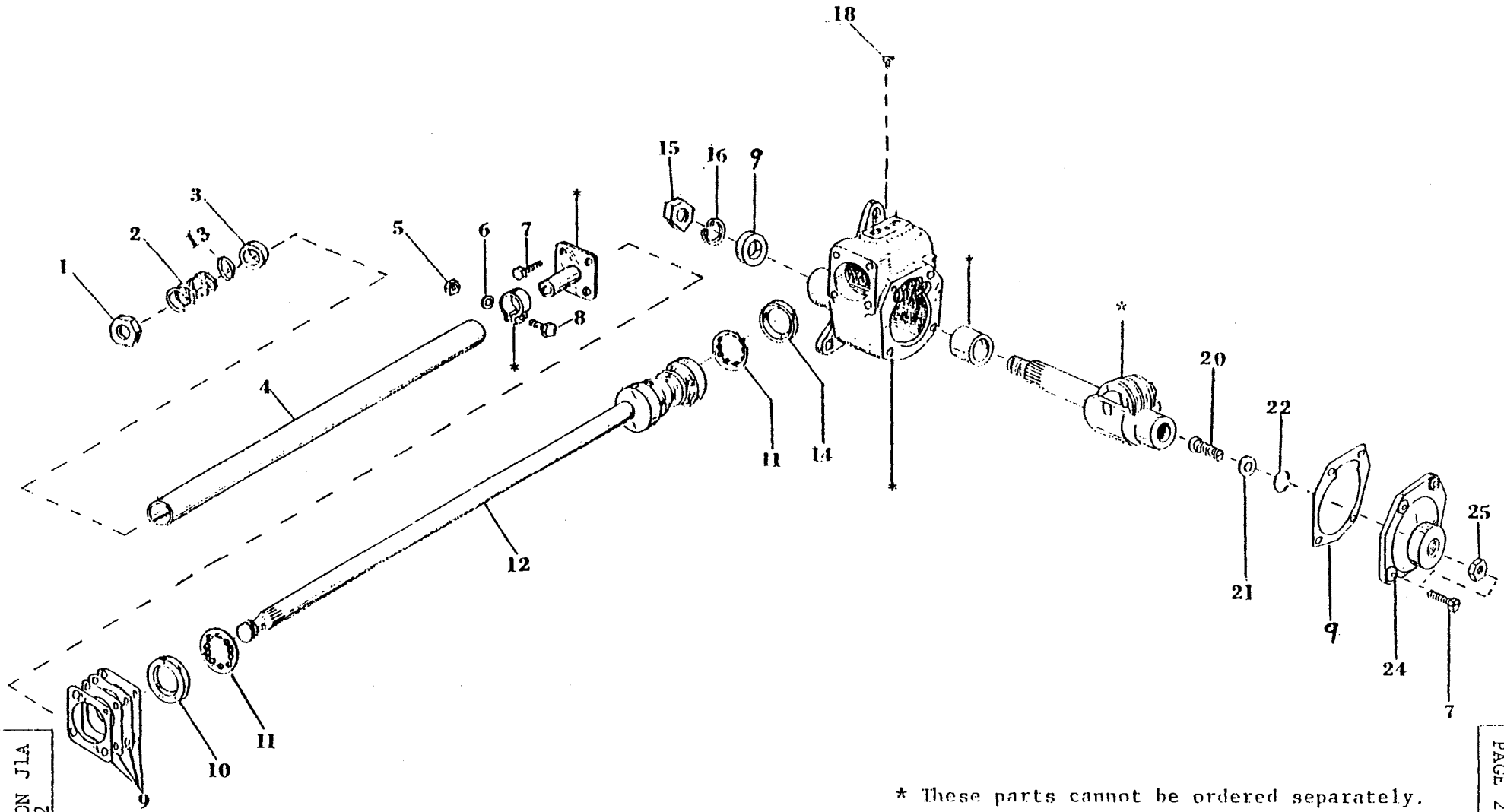

* These parts cannot be ordered separately. Order as part of the entire steering unit assembly, part # 18-307-14

SECTION J1A
PAGE 2

SECTION J1A
PAGE 2

DRAWN BY J. M.	FIGURE 4A SECTION J1A	STEERING WORM ASSEMBLY	TAYLOR DUNN MFG. CO. 2114 West Ball Rd. Anaheim, Calif.
DATE 2-4-77			

SECTION J1A
PAGE 3

STEERING WORM ASSEMBLY
REFER TO FIGURE 4A

FIG. I.D. NO.	T-D PART NO.	DESCRIPTION	QTY. REQ.
4A-0	~~18-307-14~~	Steering Gear - this part number no longer valid - see BUL-98-09-011	
4A-1	88-259-82	Nut, Jam 13/16 Hex Head, NF	1
4A-2	85-122-00	Spring, Compression 1-1/8 OD x 1	1
4A-3	18-307-54	Spacer, Jacket Bearing	1
4A-4	18-307-52	Jacket, Steering Column	1
4A-5	88-099-80	Nut, 5/16 NF	1
4A-6	88-088-62	Washer, Lock	1
4A-7	88-080-09	5/16 x 3/4 NC Hex Hd Cap Screw	8
4A-8	NOT STOCKED	5/16 x 2 NF Hex Hd Cap Screw	1
4A-9	18-307-42	Gasket, Seal & Shim Kit for Steering Worm	1
4A-10	18-307-57	Worm Adjustment Bearing Cup, Inner (Requires 18-307-42)	1
4A-11	18-307-53	Worm Bearing Assembly (Requires 18-307-42)	2
4A-12	18-307-51	Steering Column Shaft & Worm Assembly (Requires 18-307-42)	1
4A-13	18-307-55	Spacer, Jacket Bearing	1
4A-14	18-307-56	Worm Bearing Cup, outer (Requires 18-307-42)	1
4A-15	88-279-82	Nut, Jam 7/8 NF Hex	1
4A-16	88-268-62	Lockwasher, 7/8	1
4A-17	18-307-59	Seal, Steering Arm Shaft	1
4A-18	87-073-00	Fitting, Grear 45 degree, 3/16 drive	1
4A-20	18-307-64	Screw, adjusting	1
4A-21	18-307-65	Washer, Thrust	1
4A-22	18-307-66	Snap Ring	1
4A-24	18-307-67	Shaft Cover	1
4A-25	88-159-82	Nut, Jam 1/2" NF	1

SECTION J2
PAGE 1

SERVICE AND ADJUSTMENTS
BRAKE SYSTEMS - MODELS GT-370-00/GT-371-00
REFER TO FIGURE 7

GENERAL

The mechanical brake assembly located on the differential pinion shaft will require a periodic inspection for lining wear and consequently periodic adjustment.

NOTE: Normal procedure for adjusting brakes for lining wear is to adjust the brake band by means of the brake band anchor bolt and NOT by adjusting brake cable length.

A few drops of oil on the clevis pin and pivot pins of the mechanical linkage is recommended on a monthly basis. Great care must be taken that no oil is allowed to contact the brake band or drum as it will seriously impair the braking ability. If the braking surfaces become oily or contaminated for any reason, it will be necessary to remove the brake band and clean all parts thoroughly. Refer to appropriate section of this manual for the correct procedure to follow. If your vehicle is equipped with hydraulic brakes refer to section J3 for their care and adjustment.

PROCEDURE FOR MINOR BRAKE ADJUSTMENT (due to lining wear)
ALL VEHICLES - Brake Lever Arm Position Inspection

With service brake and park brake fully released, observe position of brake lever arm connected to brake band.

A. Power Traction Drive: The brake lever arm must be ¼" to 3/8" from gear case.

B. Belt Drive: The brake lever arm must be 1/8" to ¼" from brake lever arm return stop bar.

If brake lever arm is NOT in the correct position, the cable or rods which connect the brake lever arm to the service brake foot pedal and the foot operated park brake pedal must be adjusted. This requires that a complete brake adjustment, as described in the following sub-section, "Complete Brake Adjustment-All Vehicles".

If brake lever arm IS in the correct position, it will not be necessary to adjust the cables or rods. The only adjustment necessary will be to the brake band, as follows:

* A. Service Brakes: Adjust brake band anchor bolt, tightening it until brake pressure adequate to stop the vehicle is achieved with foot pedal halfway to the floor.
An additional centering adjustment is necessary. Loosen centering screw lock nuts, center band around drum. Bring band as close to drum as possible without causing brake drag. Lock centering screws.
NOTE: If band is too far from drum, brakes will grab in the forward direction.

B. PARK BRAKE FOOT OPERATED: Check operation of Park Brake. If holding power is insufficient, refer to following sub-section, "Complete Brake Adjustment-All Vehicles".

* CAUTION: Never bend the brake band anchor bolt. Any bending of the bolt may result in unexpected failure of the bolt and complete loss of Drive Line Braking Action.

SECTION J2
PAGE 2

PROCEDURE FOR COMPLETE BRAKE ADJUSTMENT - ALL VEHICLES

1. Cable adjustment (Service Brake)- With service brake pedal and park brake pedal fully released, loosen lock nut on service brake cable clevis. adjust cable length to position brake lever arm according to specifications described in preceding Section titled, "Minor Brake Adjustment for Normal Lining Wear". Tighten lock nut.
   NOTE: Prior to performing cable adjustment, all other cables or rods attached to brake lever arm must be in a slack condition during this adjustment. It may be necessary to disconnect them to assure that the brake lever arm position described is governed by the service brake pedal cable adjustment.

2. Band Adjustment - Perform brake band adjustment as described in preceeding sub-section titled "Service Brakes".

3. Cable Adjustment (Park Brake) - Park brake is always adjusted after the service brake as described in steps 1 and 2 above. With park brake pedal and service brake pedal fully released, loosen lock nut on park brake cable clevis. Adjust (shorten) cable length until brake lever arm starts to move away from gear case. At that point, stop and reverse adjustment (lengthen)two full turns. Tighten lock nut. Park brake cable is now adjusted and must have a slight bit of slack while the service brake cable is taut.

SEAT OPERATED PARK BRAKE (DEADMAN'S BRAKE)

GENERAL: The seat operated park brake is designed to automatically apply the park brake anytime the operators seat is unoccupied. Whenever the operators seat is depressed for any reason, the park brake is automatically released provided the foot operated park brake is released. The foot operated park brake should be applied anytime the vehicle is unoccupied to prevent unexpected vehicle movement.

CAUTION: NEVER leave the vehicle on a hill or incline without applying the foot operated park brake since depressing the operators seat automatically releases the park brake and could result in an accident.

TOWING: To allow the vehicle to be towed, the system incorporates a manually operated (not automatic) lock-out device attached to the bottom of the operators seat. When engaged, the seat is locked in the fully depressed position which disables the seat operated park brake ONLY. This action is no way affects the operation of the foot operated park brake systems.

BRAKE ADJUSTMENT PROCEDURE: Follow the brake adjustment procedures as described in preceeding sub-section and as follows:

1. Insure service brake pedal and foot brake is fully released.

2. Loosen lock nut on seat park brake cable clevis. Adjust (shorten) cable length until brake lever arm starts to move away from gear case. At that point, stop and reverse adjustment (lengthen) two full turns. Tighten lock nut. Seat park brake cable is now adjusted and must have a slight bit of slack while the service brake cable is taut. The other park brake cable will also be slightly slack.

SECTION J2
PAGE 3

Removal of Brake Assembly and Drum - All Vehicles

1. CAUTION: Disconnect both main battery leads to prevent accidental engagement of power while servicing unit.

2. Disconnect cables (or rods) from brake lever arm, noting their positions for proper reassembly. Remove lever arm return spring.

3. Power Traction: Remove four bolts holding brake mounting assembly, and slide assembly from drum.
   Belt Drive: Remove brake band anchor bolt and brake band pivot pin. Remove band from drum.

4. Band and drum may now be cleaned and inspected to determine if replacement or repair are necessary. The brake band lining is bonded to the band for long dependable service. When it has worn to approximately 1/16" thickness, a new band should be installed.

5. If the brake drum is scored, it should be removed and turned. It is recommended that a severely scored or damaged drum be discarded and a new drum installed.
   Power Traction: To remove drum, remove pinion shaft nut and washer. Slide drum from pinion shaft.
   Belt Drive: To remove drum, relieve belt tension by first loosening motor mount clamp nuts slightly. Loosen lock nut on motor adjusting bolt, and turn adjusting bolt in until belts can be lifted from grooves. Avoid forcing or prying belts when removing from or installing to pulleys. Remove pinion shaft nut and washer, slide pulley, which includes brake drum, from shaft.

6. Before reassembling drum to pinion shaft, inspect pinion shaft seal. If worn or damaged, install a new seal. It is recommended that the new seal be pre-soaked in light oil for several hours before installation. It is also recommended that a small amount of oil resistant sealer be applied to the opening in the gear case cover.

7. Reassemble drum, washer, and nut on pinion shaft, and tighten shaft nut to 100 ft. lb. torque.

8. Belt Drive: Install belts. Refer to Subsection titled "Belt Tension Adjustment and Alignment - Belt Drive" for proper adjustment.

9. Install balance of brake assembly parts in reverse order of disassembly.

10. Connect battery lead.

11. Adjust brake band and cables as described in subsection titled "Complete Brake Adjustment - All Vehicles".

SECTION J2
PAGE 4

Adjustment of Drive Chain Tension - Power Traction

1. CAUTION: Disconnect both main battery leads to prevent accidental engagement of power while servicing vehicle.
2. Tighten three motor mount nuts.
3. Loosen and unscrew each nut exactly one full turn.
   NOTE: This procedure is very important for if the nuts are too loose or too tight an error will result in the final adjustment which will seriously reduce the life of the chain.
4. Loosen adjusting set screw lock nut. Using standard socket set screw wrench turn set screw clockwise until tight. (If a torque wrench is available tighten to 80" lbs. torque). Without a torque wrench bear in mind that a standard socket set screw wrench is approximately 4" long. An average person will only be able to develop the required torque necessary if he tightens it as far as possible with his hands and does not use any extended handle on the wrench.
5. After developing the required torque, unscrew the adjusting screw exactly 2-1/2 turns. It is also very important to be exact on this adjustment.
6. Tighten locknut. DO NOT allow adjusting screw to move while tightening locknut.
7. Be certain that motor has moved all the way back and adjusting screw is in contact with back plate. If necessary tap motor lightly to assure this condition.
8. Tighten three motor mount nuts securely.

Perform this adjustment procedure regularly as listed below to assure long and trouble free life from your "Power Traction" Drive. One Round Equals 18 Holes of Play

Scheduled Adjustment	After	Comments
1st Adjustment	100 Rounds	New unit or after installing new chain
2nd Adjustment	Next 300 Rounds	Normal running conditions
3rd Adjustment	Next 500 Rounds	Normal running conditions
Thereafter	Every 600 Rounds	Normal running conditions

Remove Motor - Power Traction

1. CAUTION: Disconnect both main battery leads to prevent accidental engagement of power while servicing unit.
2. Drain oil from gear case by removing drain plug.
3. Identify motor leads for proper connection when reassembling. Remove motor leads.
4. Remove brake lever arm return spring.
5. Operate brake lever arm to lock pinion shaft while loosening pinion shaft nut.

SECTION J2
PAGE 5

Remove Motor - Power Traction (Cont'd)

6. Remove brake band centering brackets, brake band anchor bracket, and brake band from gear case cover, with brake cables still attached. Place brackets, band, and cables on floor under chassis.
7. Remove pinion shaft nut and washer, and slide brake drum from pinion shaft.
8. Remove remaining bolts and nuts from front of gear case cover. Remove gear case cover.
9. Remove the three nuts and washers which fasten motor to backplate. Disengage chain from motor sprocket. Remove motor, motor mounting plate, and sprocket assembly. Remove 'O' ring.
10. For information on maintenance of motor, refer to Subsections titled "Motor Maintenance" and "Motor Disassembly and Reassembly".
11. If a new motor is to be installed in place of the old motor, remove motor mounting plate from old motor. Also remove shaft nut, washer, sprocket, key, and spacers. Note location of motor terminals relative to mounting plate to assure proper positioning of mounting plate when assembling it to new motor.

Install Motor - Power Traction

1. If installing new motor, clean motor surface and install motor mounting plate to motor with four flat-head cap screws. Tighten screws to 30 ft. lb. torque, and stake head in place with center punch.
2. If installing new motor, or if motor sprocket has been removed in order to repair motor, assemble spacers, key, sprocket, washer, and shaft nut to motor shaft. Tighten shaft nut to 75 ft. lb. torque.
3. Place "O" ring in motor mounting plate opening, and attach motor and mounting plate assembly to back plate with three nuts and washers. Engage chain with sprocket and tighten nuts.
   NOTE: Chain tension adjustment is covered in a later step.
4. If seal in gear case cover is worn or damaged, install a new seal. It is recommended that the new seal be pre-soaked in light oil for several hours before installation. When pressing new seal into cover, use a small amount of oil resistant sealer on seal opening in cover.
5. Install gear case cover to backplate and pinion shaft. Assemble, but do not tighten, retaining bolts and nuts.
6. Place centering tool 41-532-50, (for centering pinion shaft seal to brake drum hub) on pinion shaft and into seal retainer.

   NOTE: If centering tool is not available, slide brake drum onto pinion shaft and into seal. Install pinion shaft washer and nut and tighten to 100 ft. lb. Position gear case cover so that seal pressure is uniform around hub of brake drum. Tighten gear case cover retaining bolts and nuts. Omit Steps 7 through 10.
7. Install pinion shaft washer and nut, and tighten to 100 ft. lb. torque.
8. Tighten gear case cover retaining bolts and nuts.
9. Remove pinion shaft nut and washer, and remove centering tool.
10. Install brake drum, washer, and pinion shaft nut. Tighten nut to 100 ft. lb. torque.
11. Install brake band, brake band anchor bracket, and brake band centering brackets to gear case cover, and tighten retaining bolts.

SECTION J2
PAGE 6

Install Motor - Power Traction (Cont'd)

12. Install brake lever arm return spring.
13. Adjust chain tension as described in subsection titled "Adjustment of Drive-Chain Tension - Power Traction".
14. Center brake band as described in subsection titled "Minor Brake Adjustment to Compensate for Normal Wear - All Vehicles".
15. Fill gear case with oil. Refer to lub chart in Section "E".
* 16. Connect motor leads.
17. Connect battery lead.

Disassemble and Reassemble Primary Drive - Power Traction

1. Perform Steps 1 through 9 in Subsection Titled "Remove Motor - Power Traction".
2. Remove chain, pinion sprocket, and spacers from pinion shaft. Note spacer locations for proper reassembly.
3. If axle or differential maintenance requiring further disassembly is required, remove back plate and gasket by removing the five bolts which retain back plate to differential carrier. Refer to subsection which covers axle and differential disassembly and reassembly.
4. To reassemble, install back plate and gasket to differential carrier with five bolts. Use gasket sealer. Tighten bolts to 50 ft. lb. torque.
5. Perform Steps 3 through 15 in Subsection titled "Install Motor - Power Traction".

Remove and Install Rear Wheel Bearings - All Vehicles

1. CAUTION: Disconnect both main battery leads to prevent accidental engagement of power while servicing vehicle.
2. Remove wheel and tire assembly.
3. On vehicles with hydraulic brakes, remove brake drum and brake shoe return spring. To ease removal of drum, increase clearance between drum and shoes by turning adjusting studs. Refer to adjustment diagram and instructions in Section J3.
4. Remove four bolts which attach axle retainer plate and spacer (or brake backing plate on vehicles with hydraulic brakes). Pull axle from housing.
5. Remove bearing gasket. Pull bearing retainer ring and bearing from axle shaft Leave axle retainer plate and spacer on axle shaft.
6. Press new bearing to shoulder on axle shaft. Press new bearing retainer ring into position on axle shaft.
7. Install new gasket over bearing retainer ring.
8. Install axle into axle housing and differential assembly.
9. Install axle retainer plate and spacer (or brake backing plate on vehicles with hydraulic brakes) to axle housing with four bolts. Tighten locknuts.
10. On vehicles with hydraulic brakes, install brake shoe return spring and brake drum. Adjust brakes as described in Section J3.
11. Install wheel and tire assembly.
12. Reconnect battery lead.

Remove Rear Axle and Drive Assembly from Chassis - All Vehicles

1. CAUTION: Disconnect both main battery leads to prevent accidental engagement of power while servicing unit.
2. Clearly mark motor leads to insure their proper location when re-assembling.
3. Remove motor leads.
4. Pull Clevis pins and disconnect brake cables or rods from brake arm.
5. Remove lower bolt from shock absorber. (Only vehicles equipped with shock absorbers).

* CAUTION: Refer to P.10 for correct procedure for installing motor leads.

SECTION J2
PAGE 7

Remove Rear Axle and Drive Assembly from Chassis - All Vehicles (Cont'd)

6. Disconnect hydraulic brake line at hose end. (Only vehicles equipped with hydraulic brakes).
7. Remove 4 bolts and nuts which attach axle housing to main leaf spring.
8. Remove axle and drive assembly from chassis.
9. Before re-installing axle and drive assembly, examine rubber bushings in leaf springs and replace if worn or damaged.
10. Install axle and drive assembly in reverse order of removal.
11. Make brake adjustments as previously outlined in subsection titled "Adjustment of Brakes (Complete)".
12. On models equipped with hydraulic brakes, it will be necessary to bleed the air from brake system. Follow procedure outlined in Hydraulic Brake Section J3 of this manual.

Disassembly of Rear Axle and Differential Assembly - All Vehicles

1. Remove rear axle and drive assembly from chassis, and remove primary drive and brake components, as described in appropriate subsections.
2. On vehicles with hydraulic brakes, remove brake drum and brake shoe return spring. To ease removal of drum, increase clearance between drum and shoes by turning adjusting studs. Refer to adjustment diagram and instructions in Section J3.
3. Remove four bolts on each end holding axle retainer (and brake backing plate on hydraulic brake models) and pull both axles.
4. Remove nuts around differential carrier housing and remove carrier from axle housing. (Note position of clip for proper reassembly of brake spring).
5. Mark one differential bearing cap and bearing support to insure proper assembly. Remove adjusting nut locks, bearing caps, and adjusting nuts. Lift differential out of carrier.
6. Remove drive gear from differential case.
7. Drive out differential pinion shaft retainer and separate the differential pinion shaft and remove gears and thrust washers.
8. Remove drive pinion retainer from carrier. Remove O-Ring from retainer.
9. Remove pinion locating shim. Measure shim thickness with micrometer.
10. If the drive pinion pilot bearing is to be replaced, drive the pilot end and bearing retainer out at the same time. When installing, drive the bearing in until it bottoms. Install a new retainer with the concave sideup.
11. Press the pinion shaft out of front bearing cone and remove spacer.
12. Remove pinion bearing cone.
13. Do not remove pinion bearing cups from retainer unless they are worn or damaged. The flange and pilot are machined by locating on these cups after they are installed in the bores. If new cups are to be installed, make sure they are seated in the retainer by trying to insert a .0015" feeler guage between cup and bottom of bore.

Reassembly of Rear Axle and Differential Assembly - All Vehicles

1. Differential Case: Place a side gear and thrust washer in the differential case bore. LUBRICATE ALL PARTS LIBERALLY WITH AXLE LUBRICANT DURING ASSEMBLY. With a soft faced hammer, drive pinion shaft into case only far enough to retain a pinion thrust washer and pinion gear. Place the second pinion and thrust washer in position. Drive the pinion shaft into place. Be careful to line up pinion shaft retainer holes. Place second side gear and thrust washer in position and install differential case cover. Install retainer. A pinion or axle shaft spline can be inserted in side gear spline to check for free rotation of differential gears.

SECTION J2
PAGE 8

Reassembly of Rear Axle and Differential Assembly - All Vehicles (Cont'd)

2. If the differential bearings have been removed, use a suitable press to install them.
3. Install pinion rear bearing cone on the pinion shaft. Install spacer with shims on the shaft. Place the bearing retainer on the pinion shaft, and install the front bearing cone. Lubricate both bearings with differential oil.
4. Power Traction: Place spacers, sprocket, and brake drum on pinion shaft spline. Assemble washer and shft nut, and tighten to 100 ft. lb. torque.
   Belt Drive: Place spacers and pulley on pinion shaft spline. Assemble washer and shaft nut and tighten to 100 ft. lb. torque.
   NOTE: The bearing should spin freely without end play. If it is too tight or too loose, adjust by removing or adding spacers. Refer to Figure 5, I.D. Nos. 52 and 53.
5. Shim Selection: Manufacturing tolerances in the pinion bore dimensions and in the best operation position of the gears make an adjustment shim necessary. This shim is placed between the pinion retainer and the carrier, Figure 5. An increase in the thickness of the shim moves the pinion away from the drive gear. Manufacturing objectives are to make axles requiring a .0015" shim and if a new assembly is being built, a .0015" shim should be used for a tentative build-up. Shims are available in .010" to .021" thicknesses in steps of .001". Pinions and drive gears are marked, when matched, with the same number. Following the number on the pinion is a minus (-) or (+) followed by a number. If the pinion is marked "-1" it indicates that a shim .001" thinner than a standard shim for this carrier is required. A minus number means the pinion should be moved closer to the drive gear and a thinner shim is required. A plus number means the pinion should be moved farther from the drive gear and a thicker shim is required. A Pinion marked zero (0) is a standard pinion. To select a shim, measure the original shim with a micrometer. Note the dimensional mark on the original pinion. Compare the mark on the original pinion with the mark on the new pinion to determine how the orignal shim should be modified. For example, if the original shim is .015" and the original pinion is marked "-1", the new pinion requires a +1 shim. Therefore, the new pinion requires a .002" thicker shim, and a .017" shim should be used. If the new pinion is marked the same as the old pinion, no shim change is required.
6. After the proper selection of shims, insert "O" ring seal and pinion retainer assembly into differential carrier. Tighten 5 retainer bolts to 50 lb. ft. torque.
   NOTE: Four or five of the retainer bolts will have to be removed later for installation of primary drive and brake components.
7. Install differential case, bearing cups, adjusting nuts, and bearing caps being sure that each cap is located in the same position from which it was removed. (Use marks as guide).
8. ADJUST bearing nuts so that differential case will be free to revolve. It is very important that there will be no bearing play or looseness, as this will inevitably lead to gear noise and wear. Gear backlash must be set at the same time to a tolerance of .005" to .009". NOTE: It will be necessary to release some of the cap bolt tension in order to allow the bearing to move while making the adjustments. If the caps are too loose an error will result when trying to set backlash and bearing clearance. Therefore double check your setting after the cap bolts have been tightened. If necessary make corrections in your settings until the specified tolerances are maintained after the cap bolts have been tightened.

SECTION J2
PAGE 9

Reassembly of Rear Axle and Differential Assembly - All Vehicles (Cont'd):

9. Install nut locks.
10. Install differential carrier assembly in axle housing using new gasket and gasket sealer.
11. Install axles, brake assemblies (on models with hydraulic brakes), bearing retainers, and gaskets. NOTE: Axles are equipped with special sealed bearings. Should there be evidence of seal leakage, it is recommended that the bearing be replaced. It is also recommended that gasket located between bearing and bearing seat in axle housing be replaced at the same time. Refer to Figure 5, or Figure 5A.
12. Power Traction: Remove pinion shaft nut, washer, spacers, brake drums, and sprocket. Remove five bolts from pinion bearing retainer. Install primary drive components as described in subsection titled "Disassemble and Reassemble Primary Drive - Power Traction".
    Belt Drive: Remove pinion shaft nut, washer, and pulley. Remove four bolts from pinion bearing retainer which retain brake brackets. Install brake brackets and primary drive components as described in subsection titled "Disassemble and Reassemble Primary Drive - Belt Drive Vehicles".
13. Fill housing with oil to level described in Section E, Figure 1 (Power Traction), or Figure 1A (Belt Drive).

Belt Tension Adjustment and Alignment - Belt Drive Vehicles

NOTE: New belts will "seat-in" rapidly, therefore, readjust belt tension after only a few hours of running to prevent undue slippage and wear. It may be necessary to repeat the adjustment procedure two or three times within the first week or two of running until the new belts become thoroughly "seated-in".

1. Disconnect one battery lead to prevent accidental engagement of power while servicing unit.
2. Loosen motor mount clamp nuts slightly.
3. Loosen motor adjusting bolt lock nut and turn adjusting bolt in or out as needed to tension belts properly.
   NOTE: Belt tension is correct when belts will deflect between 1/4" and 3/8" at the mid point between pulleys. Press each belt firmly at themid point with your thumb or finger and measure the deflection at the same point.
4. Rotate drive pulley sufficiently so belts will travel at least one full turn and check belt tension again. This will allow belts to seat properly in grooves. Repeat tension adjustment as necessary until satisfactory results are obtained.
5. Tighten lock nut on tension adjustment bolt, holding bolt in position with one wrench while tightening lock nut with second wrench.
6. Check pulley alignment with straight edge. If misaligned, move motor forward or rearward on it's mounting bracket to bring pulleys into alignment. If necessary tap motor mount bracket into position with soft hammer.
7. Retighten motor mount clamp nuts securely.

SECTION J2
PAGE 10

Replacement of Belts - Belt Drive Vehicles

1. CAUTION: Disconnect both main battery leads to prevent accidental engagement of power while servicing unit.
2. Loosen motor mount clamp nuts slightly.
3. Loosen motor adjusting bolt lock nut and turn adjusting bolt in until belts can be easily lifted from pulley grooves without prying or forcing. Remove old belts.
4. Install a full set of new belts of equal length. Replacement of only a part of the set will prevent obtaining proper tension of all belts. This will cause unequal division of load among the belts with abnormal wear as a result.
5. Adjust tension and alignment as described in preceding section.

Remove and Install Motor - Belt Drive Vehicles

1. CAUTION: Disconnect both main battery leads to prevent accidental engagement of power while servicing unit.
2. Loosen motor mount clamp nuts slightly.
3. Loosen motor adjusting bolt lock nut and turn adjusting bolt in until belts can be easily lifted from pulley grooves without prying or forcing. Remove belts.
4. Clearly mark motor leads to assure proper location when reassembling. Remove motor leads.
5. Remove motor mount clamp nuts and clamp. Remove motor and mounting brackets from axle housing.
6. If installing new motor, remove motor shaft nut, pulley, and key from old motor. Also remove motor mounting brackets and screws. For information on maintenance of motor, refer to subsections titled "Motor Maintenance" and "Motor Disassembly and Reassembly".
7. If installing new motor, assemble pulley, key and shaft nut. Tighten shaft nut to 75 ft. lb. torque.
8. Reassemble to drive assembly in reverse order. Adjust and aligh belts as described in subsection titled "Belt Tension Adjustment and Alignment Belt Drive Vehicles".

Disassemble and Reassemble Primary Drive - Belt Drive Vehicles

1. Perform Steps 1 through 5 in subsection titled "Remove and Install Motor-Belt Drive".
2. Remove pinion shaft nut, washer, pulley, and spacers from pinion shaft.
3. If axle or differential maintenance requiring further disassembly is required, disengage brake lever arm return spring, and remove brake anchor and pivot brackets from differential carrier. Leave brake components attached to brake cables and place on floor under chassis.
4. Reassemble in reverse order. Tighten brake bracket bolts to 50 ft. lb. torque.
5. Before reconnecting battery lead, adjust belt tension and alignment as described in subsection titled "Belt Tension Adjustment and Alignment - Belt Drive Vehicles".
6. Reconnect Battery Lead.

Motor Lead Connection Procedure

a) Check that each motor terminal stud nut is tightened securely but not over-tightened as this could bend or twist the terminal post and cause an electrical short within the motor.
b) Install motor leads on correct motor terminal post.
c) Install second nut on each terminal post and finger tighten
d) To avoid bending, twisting or breaking-off a terminal post, use a thin pattern 9/16 wrench to hold bottom nut from moving while tightening the top nut. Carefully tighten the top nut so as to make a good connection between the terminal post and motor lead.

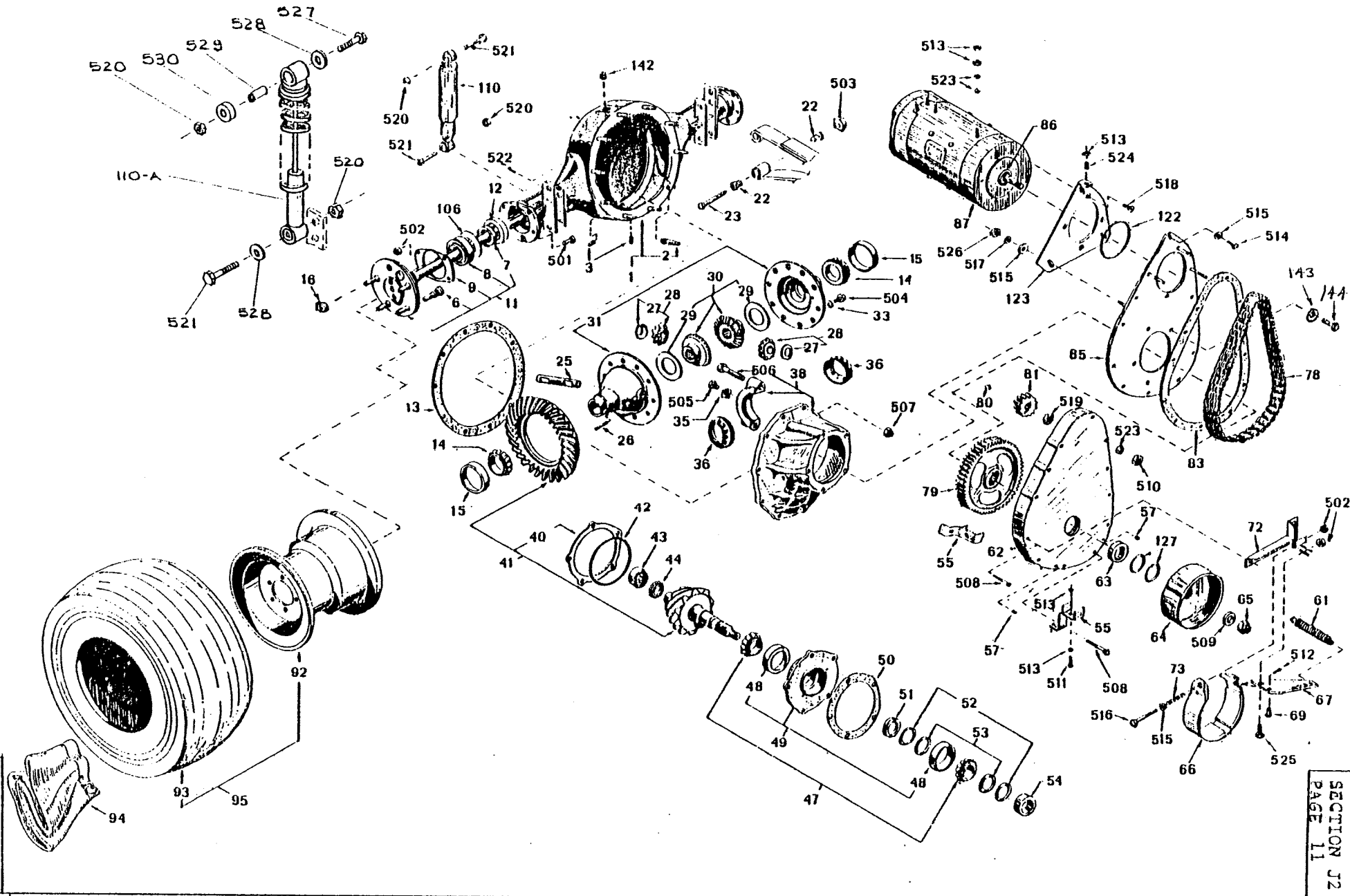

SECTION J2
PAGE 11

NO.	DESCRIPTION	LENGTH	QUAN.	REVISED DATE	REVISION
TOL. FRAC.± DEC.±	FIGURE 5 SECTION J2	POWER TRACTION REAR AXLE, MOTOR, AND BRAKES			
SCALE NONE					
DRAWN BY R.E.A.					
DATE 1-8-81					

TAYLOR DUNN MFG. CO.
2114 West Ball Rd.
Anaheim, Calif.

SECTION J2
PAGE 11

SECTION J2
PAGE 12

POWER TRACTION REAR AXLE, MOTOR, AND BRAKES

REFER TO FIGURE 5

FIG. I.D. NO.	T-D PART NO.	DESCRIPTION	QTY. REQ.
5-1	41-293-00	Housing, Rear Axle with Bolts, for 1-9/32 I.D. Wheel Bearing (27-11/16 Wide, Flange to Flange)	1
5-1	41-297-00	Housing, Rear Axle with Bolts for 1-9/16 I.D. Wheel Bearing (20-3/16 Wide, Flange to Flange)	1
5-2	96-330-00	Bolt-Differential Carrier to Housing	10
5-3	41-997-00	Drain and Level Plug (1/8" Pipe)	2
5-6	96-331-00	Bolt - 1/2" N.F. (Spec.) Rear Hub	10
5-7	32-509-00	Retainer Ring Rear Axle Bearing for 1-9/32 I.D. Wheel Bearing (1-5/8 O.D.)	0 or 2
5-7	32-515-00	Retainer Ring, Rear Axle Bearing for 1-9/16 I.D. Wheel Bearing (2" O.D.)	0 or 2
5-8	80-505-00	Ball Bearing, Rear Axle, 1-9/32 I.D.	0 or 2
5-8	80-503-00	Ball Bearing, Rear Axle, 1-9/16 I.D.	0 or 2
5-9	32-511-00	Retainer Plate, Rear Axle, for 1-9/32 I.D. Wheel Bearing (4-1/2" Length)	0 or 2
5-9	32-514-00	Retainer Plate, Rear Axle, for 1-9/16 I.D. Wheel Bearing (5-1/2" Length)	0 or 2
5-11	41-160-11	Assembly, Axle, Rear 22-3/8" Long Including Studs, with Retaining Plate, Retaining Ring and Small Bearing w/Gasket	0 or 2
5-11	41-161-11	Assembly, Axle, Rear 13-1/4" Long Including Studs, with Retaining Plate, Retaining Ring and Small Bearing w/Gasket	0 or 2
5-11	41-164-11	Assembly, Axle, Rear 22-3/8" Long Including Studs, with Retaining Plate, Retaining Ring and Large Bearing w/Gasket and 45-301-00 Oil Seal	0 or 2
5-11	41-165-11	Assembly, Axle, Rear 13-1/4" Long Including Studs, with Retaining Plate, Retaining Ring and Large Bearing w/Gasket and 45-301-00 Oil Seal	0 or 2
5-12	45-301-00	Seal, Oil, Rear Axle	2
5-13	45-042-00	Gasket, Drive Axle Housing to Differential Carrier	1
5-14	80-511-00	Bearing, Tapered Roller, for Small Axle & Small Carrier Housing, 501349, 1.628 I.D.	1
5-14	80-512-00	Bearing, Tapered Roller, for Large Axle & Large Carrier Housing, 603049, 1.748 I.D.	1
5-14	80-513-00	Bearing, Tapered Roller, for Large Axle & Small Carrier Housing, 102949, 1.784 I.D.	1

SECTION J2
PAGE 13

POWER TRACTION REAR AXLE, MOTOR, AND BRAKES
REFER TO FIGURE 5

FIG. I.D. NO.	T-D PART NO.	DESCRIPTION	QTY. REQ.
5-15	80-127-00	Tapered Bearing Race, LM 501310, O.D. 2.891 Use with Bearing 80-511-00	2
5-15	80-128-00	Tapered Bearing Race, LM 603011, O.D. 3.0625 Use with Bearing 80-512-00	2
5-15	80-129-00	Tapered Bearing Race, LM 102910, O.D. 2.8910 Use with Bearing 80-513-00	2
5-16	97-236-00	Nut, Tapered 1/2" N.F. (Lug)	10
5-22	98-601-00	Rubber Grommet 1/2" I.D. for Leaf Spring Eye	8
5-23	96-240-00	Hex Head Cap Screws 1/2" x 4" N.C. (Pointed)	4
5-25	41-700-00	Shaft, Differential Pinion	1
5-26	41-701-00	Pin	1
5-27	41-702-00	Thrust Washer - Differential Pinion Shaft	2
5-28	41-703-00	Differential Shaft Pinion Kit (Two Differential Gears and Two Thrust Washers)	1 Kit
5-29	41-704-00	Thrust Washer - Differential Side Gear	2
5-30	41-705-00	Differential Side Gear Kit (Two Differential Side Gears and Two Thrust Washers)	1 Kit
5-31	41-712-00	Assembly, Differential Gear Case W/Differential Gears less Carrier Bearings & Ring Gear for small 1.628 I.D. Carrier Bearing	1
5-31	41-713-00	Assembly, Differential Gear Case w/Differential Gears less Carrier Bearings & Ring Gear for large 1.784 I.D. Carrier Bearing	1
5-33	97-163-00	Washer, for Ring Gear Bolt, 7/16 I.D. x 3/4" O.D. x 1/32"	10
5-35	41-706-00	Nut Lock, Diff. Brg. Adjustment with 30 Degree Angle Tab. Use w/41-707-00/41-708-00 Diff. Brg. Adj. Nuts	2
5-35	41-706-50	Nut Lock, Diff. Brg. Adjustment with Rt. Angle Tab w/Last Bend 1/2" Long. Use w/41-707-50 Diff. Brg. Adj. Nut	2
5-35	41-706-51	Nut Lock, Diff. Brg. Adjustment with Rt. Angle Tab w/Last Bend 1/4" Long. Use w/41-708-50 Diff. Brg. Adj. Nut	2
5-36A	41-707-00	Nut, Diff. Brg. Adjustment, 2-15/16" O.D. Oblong Locking Holes. Use LM 501349 Bearing	2
5-36B	41-707-50	Nut, Diff. Brg. Adjustment, 2-15/16" O.D. Round Locking Holes. Use LM 102949 Bearing	2
5-36	41-708-00	Nut, Diff. Brg. Adjustment, 3-1/8" O.D. Oblong Locking Holes. Use LM 603049 Bearing	2
5-36	41-708-50	Nut, Diff. Brg. Adjustment, 3-1/8" O.D. Round Locking Holes. Use LM 603049 Bearing	2

SECTION J2
PAGE 14

POWER TRACTION REAR AXLE, MOTOR, AND BRAKES
REFER TO FIGURE 5

FIG. I.D. NO.	T-D PART NO.	DESCRIPTION	QTY. REQ.
5-38	41-709-00	Carrier, Differential, Less Differential Gear Case Assy., Bearings & Ring and Pinion Gears for use W/Small 1.628 I.D. Carrier Bearing	1
5-38	41-710-00	Carrier, Differential, Less Differential Gear Case Assy., Bearings & Ring and Pinion Gears for use w/Large 1.784 I.D. Carrier Bearing	1
5-40	41-711-00	Shim - Drive Pinion Bearing, .005 Thick	1 to 3
5-41	31-234-00	Set, Ring and Pinion Gear, 3.00 Ratio	1
5-41	31-236-00	Set, Ring and Pinion Gear, 3.10 Ratio	1
5-41	31-238-00	Set, Ring and Pinion Gear, 3.50 Ratio	1
5-41	31-239-00	Set, Ring and Pinion Gear, 5.43 Ratio	1
5-42	80-702-00	"O" Ring - Drive Pinion Bearing Retainer	1
5-43	80-555-00	Roller Bearing - Rear, Pinion Pilot	1
5-44	41-714-00	Retainer, Driving Pinion Pilot Bearing	1
5-47	80-554-00	Tapered Roller Bearing - Pinion Shaft, Front & Rear	2
5-48	80-125-00	Tapered Bearing Race - Pinion Shaft, Front & Rear	2
5-49	44-340-90	Flange, Ring Gear Pinion Bearing, W/Bearing Races Less Bearings, Power Traction Drive.	1
5-50	45-021-00	Gasket, Ring Gear Pinion Bearing Flange to Chain Case Backing Plate 6-1/2" O.D.	1
5-51	16-415-00	Spacer Pinion Shaft (.440" Thick)	1
5-52	16-410-00	Spacer Pinion Shaft (.020" Thick)	2 to 6
5-52	16-419-00	Spacer Pinion Shaft (.002" Thick)	2 to 6
5-53	16-411-00	Spacer Pinion Shaft (.005" Thick)	2 to 6
5-54	16-417-00	Spacer, Sprocket (.340 Thick)	0 to 1
5-55	41-371-00	Bracket, Brake Alignment	2
5-57	41-989-00	Plug (Filler Level and Drain) 1/4" N.P.T.	2
5-61	85-270-00	Extension Spring 1-1/4" O.D. x 4-3/8" Free Length	1
5-62	43-201-00	Cover, Chain Case with Oil Seal	1
5-63	45-331-00	Oil Seal, Chain Case Cover	1
5-64	41-532-00	Brake Drum, Splined, 6" x 2-1/4"	1
5-65	97-250-00	Nut - Pinion 3/4" - 20 Extra Fine Thread, w/washer.	1
5-66	41-661-61	Kit, Full Brake Band for 6" Drum including lined Brake Band, Anchor Bolt & Lock Nut	1
5-67	50-657-00	Arm, Brake Lever	1
5-69	96-771-00	Pin, Clevis 3/8" x 3/4" Fact to Hole	1
5-72	41-368-00	Bracket, Brake Mounting, Full Band	1
5-73	85-060-00	Spring, Compression 5/8" O.D. x 2-1/2" Long	1
5-78	30-508-20	Chain, Silent, 96 Pitches, 36" Long, used with 81 Tooth Sprocket	1
5-78	30-506-20	Chain, Silent, 72 Pitches, 27" Long, used with 42 Tooth Sprocket	1
5-78	30-507-20	Chain, Silent, 82 Pitches, 30-3/4" Long used with 54 Tooth Sprocket	1

SECTION J2
PAGE 15

POWER TRACTION REAR AXLE, MOTOR, AND BRAKES
REFER TO FIGURE 5

FIG. I.D. NO.	T-D PART NO.	DESCRIPTION	QTY. REQ.
5-79	30-093-00	Sprocket, 81 Tooth With Splined Hub, 17/32 Face Width	1
5-79	30-091-00	Sprocket, 42 Tooth With Splined Hub, 17/32 Face Width	1
5-79	30-092-00	Sprocket, 59 Tooth With Splined Hub, 17/32 Face Width	1
5-80	97-100-00	Key, Woodruff - 3/16"	1
5-81	30-080-00	Sprocket - 15 Tooth x 3/4" Bore	1
5-83	45-002-00	Gasket, Chain Case Cover, 17-3/4" Long	1
5-85	44-352-51	Plate, Chain Case Backing, Adjustable, Side Motor Mount	1
5-86	(See Section J2M)		
5-87	70-049-00	Motor, 1.5/2 H.P. - 24/36 Volt, 1800/2800 R.P.M. G.E. - 4 Terminals, 5BC48JB550	L
5-87	70-054-00	Motor, 2.25/3.5 H.P., - 24/36 Volt, 1800/2800 R.P.M. G.E. - 4 Terminals, 5BC49JB305	1
5-92	12-020-00	Wheel, Demountable, for 18 x 850 x 8 or 8 x 950 x 8 ~~Tubeless Tire~~	2
5-93	10-093-00	Tire, 18 x 850 x 8, 4 Ply, Terra Power Rib, Tubeless	2
5-93	10-091-00	Tire, 18 x 950 x 8, 4 Ply, Terra Traction, Tubeless	2
5-94	11-041-00	Tube (Optional) for 18 x 850 x 8 or 18 x 950 x 8 Tire	2
5-95	13-746-00	Assy., Tire ~~& Demountable Wheel, 18 x~~ 850 x 8, 4 Ply, Terra Power Rib, Tubeless	2
5-95	13-751-00	Assy., Tire & Demountable Wheel, 18 x 950 x 8, 4 Ply Terra Traction Tubeless	2
5-106	45-044-00	Gasket, Axle Bearing to Drive Axle Housing Assy., 1-9/32 I.D. Bearing	2
5-106	45-045-00	Gasket, Axle Bearing to Drive Axle Housing Assy., 1-9/16 I.D. Bearing	2
5-110	86-602-00	Shock Absorber	2
5-110	86-004-00	Shock Absorber, Spring Loaded Less Mounting Sleeve, Requires 86-004-50 Sleeve	2
5-122	80-703-00	"O" Ring Motor Mount Seal	1
5-123	70-454-00	Plate, Motor Mounting Adjustment	1
5-127	16-400-00	Spacer, 1-1/4" I.D. X 1-1/2" O.D., .125 Thick	0,1 or 2
5-142	41-997-00	Plug, Level & Drain, 1/8" with Sq. Top	0 or 1
5-142	41-988-00	Plug, Filler, 3/8" Pipe with Sq. Recessed Top	1 or 0
5-143	88-108-63	Lockwasher, 3/8, Internal tooth	5
5-144	88-101-13	Screw, hex head 3/8 X 1 1/4 N.C. Grade 5	5

SECTION J2
PAGE 16

FIG. I.D. NO.	T-D PART NO.	DESCRIPTION	QTY. REQ.
5-501	88-100-11	Hex Head Cap Screw 3/8" x 1" N.C. (Small Bearing)	8
5-501	88-120-11	Hex Head Cap Screw 7/16" x 1" N.C. (Large Bearing)	8
5-502	88-109-81	Lock Nut 3/8" N.C. (Hex)	10
5-503	88-149-81	Lock Nut 1/2" N.C. (Hex)	4
5-504	96-243-00	Hex Head Cap Screw 7/16" x 7/8" N.F., Grade 5	10
5-505	88-080-09	Hex Head Cap Screw 5/16" x 3/4" N.C.	2
5-506	88-140-16	Hex Head Cap Screw 1/2" x 2" N.C.	4
5-507	88-119-80	Nut - 3/8" N.F. (Hex)	14
5-508	88-080-20	Hex Head Cap Screw 5/16" x 3" N.C.	9
5-509	88-228-61	Washer 3/4" S.A.E.	1
5-510	88-089-81	Lock Nut 5/16" N.C. (Hex)	12
5-511	88-080-11	Hex Head Cap Screw 5/16" x 1" N.C.	2
5-512	88-517-11	Cotter Pin 3/32" x 1"	1
5-513	88-089-80	Nut - 5/16" N.C. (Hex)	12
5-514	88-100-13	Hex Head Cap Screw 3/8" x 1-1/4" N.C.	6
5-515	88-108-60	Washer 3/8" Flat Cut	4
5-516	96-245-00	Hex Head Cap Screw 3/8" NC x 4-15/16", Grade 5	1
5-517	88-108-62	Lockwasher 3/8"	3
5-518	88-103-09	Flat Head Socket Cap Screw 3/8" x 3/4" N.C.	4
5-519	88-239-82	Jam Nut - 3/4" N.F. (Hex)	1
5-520	88-129-81	Lock Nut - 7/16 Hex	4
5-521	88-120-17	Hex Head Cap Screw 7/16 N.C. x 2-1/4	4
5-522	88-527-11	Cotter Pin 1/8" x 1" (Axle Vent)	1
5-523	88-088-61	Washer 5/16" S.A.E.	11
5-524	88-087-11	Socket Set Screw 5/16 NC x 1"	1
5-525	88-100-15	Hex Head Cap Screw, 3/8 NC x 1-3/4	1
5-526	88-109-80	Nut 3/8" NC (Hex)	3
5-527	88-121-19	Cap Screw 7/16 x 2-3/4 NC - Grade 5	2
5-528	88-128-60	7/16 Washer	4
5-529	86-004-50	Sleeve, Shock Absorber, 7/16 I.D. x 1-1/4 Long	2
5-530	17-106-00	Collar, 1/2" Shaft, Shock Absorber	2

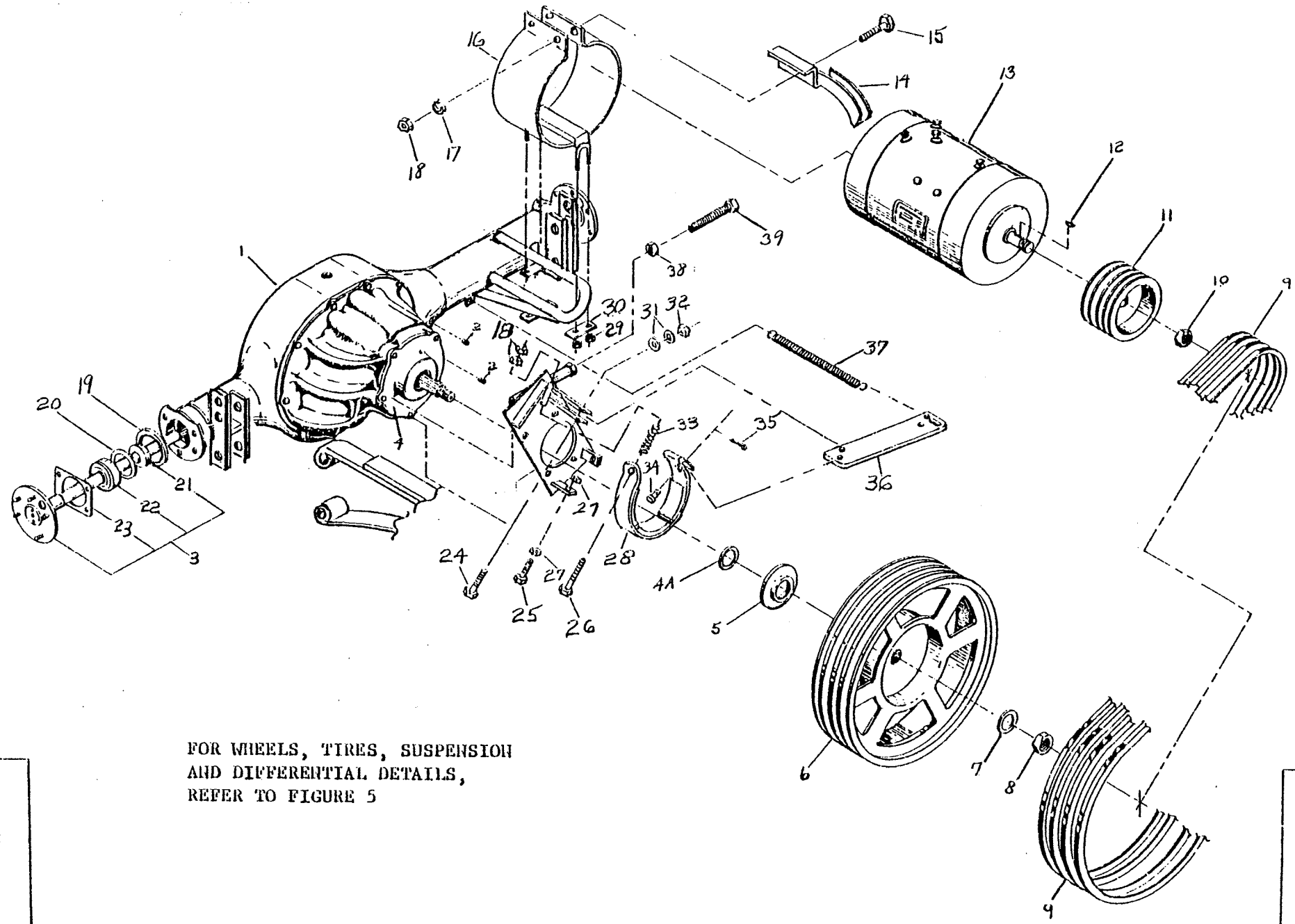

FOR WHEELS, TIRES, SUSPENSION
AND DIFFERENTIAL DETAILS,
REFER TO FIGURE 5

SECTION J2
PAGE 17

NO.	DESCRIPTION	LENGTH	QUAN.	REVISED DATE	REVISION

TOL. FRAC. ± DEC. ±
SCALE NONE
DRAWN BY J.M
DATE 12-12-79

FIGURE 5A

SECTION J2

BELT DRIVE
REAR AXLE, MOTOR, BRAKES

TAYLOR DUNN MFG. CO.
2114 West Ball Rd.
Anaheim, Calif.

SECTION J2
PAGE 18

FIG. I.D. NO.	T-D PART NO.	DESCRIPTION	QTY. REQ.
5A-1	41-298-10	Housing, Drive Axle for 1-9/16 I.D. Wheel Bearing, 35-1/2 Tread Width, Belt Drive	1
5A-2	41-997-00	Plug, Level & Drain, 1/8 with Square Top	2
5A-3	41-164-11	Assembly, Axle, Rear 22-3/8" Long Including Studs with Retaining Plate, Retaining Ring & Bearing, Gasket & Oil Seal	1
5A-3	41-165-11	Assembly, Axle, Rear 13-1/4" Long Including Studs with Retaining Plate, Retaining Ring, Bearing, Gasket & Oil Seal	1
5A-4	44-340-91	Flange, Ring Gear Pinion Bearing with Bearing Races less Bearings, Belt Drive	1
5A-4A	16-418-00	Spacer, Pinion, .140 Thick, (Omitted in later models)	1
5A-5	45-339-00	Seal, Oil, Drive Pinion Shaft, 3.001 O.D.	0 or 1
5A-5	45-340-00	Seal, Oil, Drive Pinion Shaft, 4.128 O.D.	0 or 1
5A-6	30-113-00	Pulley, 4 Belt, 3V Section, 13 O.D. with Brake Drum & Hub	1
5A-7	88-228-61	Washer, 3/4 S.A.E.	1
5A-8	97-250-00	Nut, Pinion, 3/4-20 Extra Fine Thread with Integral Washer	1
5A-9	30-625-00	Belt, 3V470	0 or 4
5A-9	30-620-00	Belt, 3V400	0 or 4
5A-10	88-239-82	Nut, Hex Jam, 3/4 NF, Thin Pattern	1
5A-11	30-160-00	Pulley, 4 Belt, 3.15 O.D., 3/4 Bore	0 or 1
5A-11	30-162-00	Pulley, 4 Belt, 4.12 O.D., 3/4 Bore	0 or 1
5A-12	97-100-00	Key, Woodruff, 3/16	1
5A-13	70-049-00	Motor (See Section J2M for Details)	0 or 1
5A-13	70-054-00	Motor (See Section J2M for Details)	0 or 1
5A-14	75-500-50	Channel Sheet Metal, Wiring Harness Support	1
5A-15	88-101-18	Screw, Hex Head 3/8 x 2-1/2 NC, Grade 5	2
5A-16	70-434-00	Mount, Motor	1
5A-17	88-108-62	Washer, Lock 3/8	2
5A-18	88-109-80	Nut, Hex Head, 3/8 NC	3
5A-19	45-301-00	Seal, Oil, Rear Axle	2
5A-20	45-045-00	Gasket, Rear Axle Bearing, 1-9/16 I.D. Bearing	2
5A-21	32-515-00	Ring, Retainer, Rear Axle Bearing, 1-9/16 I.D. Bearing	2
5A-22	80-503-00	Bearing, Ball, Rear Axle, 1-9/16 I.D.	2
5A-23	32-514-00	Plate, Retainer, Rear Axle, 1-9/16 I.D. Bearing	2
5A-24	88-100-15	Screw, Hex Head Cap, 3/8 x 1-3/4 NC	1
5A-25	88-080-11	Screw, Hex Head Cap, 5/16 x 1 NC	2
5A-26	96-245-00	Bolt, Special Head, Grade 5, 3/8 x 4-15/16 NC	1
5A-27	88-089-80	Nut, Hex Head, 5/16 NC	4
5A-28	41-661-61	Kit, Lined Brake Band, Anchor Belt and Lock Nuts	1
5A-29	88-109-87	Nut, Fastite, 3/8 Nc	4

SECTION J2
PAGE 19

FIG. I.D. NO.	T-D PART NO.	DESCRIPTION	QTY. REQ.
5A-30	70-422-00	Strap, Motor Mount	2
5A-31	88-108-60	Washer, Plain 3/8	2
5A-32	88-109-81	Nut, Lock 3/8	1
5A-33	85-060-00	Spring, Brake Band Anchor	1
5A-34	96-771-00	Pin, Clevis 3/8 x 3/4	1
5A-35	88-517-11	Pin, Cotter 3/32 x 1	1
5A-36	50-663-00	Arm, Brake Lever	1
5A-37	85-270-00	Spring, Extension for Brake Lever Arm	1
5A-38	96-316-00	Bolt, 1/2 x 3 NC	1
5A-39	88-149-80	Nut, 1/2 NC	1

SECTION J2M
PAGE 1

MOTOR MAINTENANCE, SERVICE AND ADJUSTMENT
ELECTRIC MOTORS
REFER TO FIGURE 5H

Detailed service procedures covering maintenance of bearing brushes and commutator are covered in this section. DO NOT PERFORM THIS PROCEDURE WHILE BATTERIES ARE BEING CHARGED.

Maintenance of electric motors should be referred to personnel with experience and equipment. Should it be necessary for you to order replacement parts for your motor, IT IS NECESSARY TO INCLUDE COMPLETE NAMEPLATE DATA WITH ORDER.

MOTOR MAINTENANCE - BRUSH INSPECTION AND REPLACEMENT

1. Remove cover, exposing brush assemblies. Lift brush from holder for inspection.

2. If brushes are worn, remove, install new brushes. Use fine sandpaper to "seat in" new brushes to commutator. To determine when to replace worn brushes, proceed as follows:

   a. For motors equipped with brushes having end pigtails and side hooks, replace brush when hook is within 1/16" from bottom of hook slot.
   b. For motors equipped with brushes having side pigtails only, replace brush when pigtail is within 1/16" from bottom of pigtail slot.

   NOTE: When one brush is replaced in a motor, it is considered good maintenance practice to replace all brushes.

3. Check operation of each brush to assure that brush slides freely and does not bind in holder.

4. Replace Cover.

MOTOR DISASSEMBLY AND REASSEMBLY

1. Remove motor from vehicle as described in section J2.

2. Determine if witness marks on end bell and stator housing are present. If not, mark end bell and housing to assure proper relation of brushes and commutator when reassembling.

3. Remove cover, exposing brush assemblies. Lift brushes from brush holder.

4. Remove bolts holding end bells and remove end bell and rotor. (Pull from shaft extension end). Take care not to damage any coils or armature wires when handling motor parts.

5. Press or pull old bearings off by using bearing press or bearing puller. Do not damage shaft while removing bearings.

6. Install new bearings onto shaft by gentle pressure or tapping with proper tool on inner race only. Bearing will be damaged if pressed or driven by outer race or seals.

7. If the commutator is worn or "burned" it should be turned, the mica undercut and the commutator polished.

8. Oil bearing housing lightly to aid in reassembly.

9. Reassemble motor taking care that all parts are kept clean.

10. Install brushes and "seat in" with fine sandpaper.

11. Check operation of each brush to assure that brush slides freely in holder.

12. Replace cover.

13. Reassemble to vehicle as described in preceding subsection.

NOTE: If motor terminal studs were removed for inspection, refer to Section J2, P. 5, item 17 for correct procedure to avoid damaging studs.

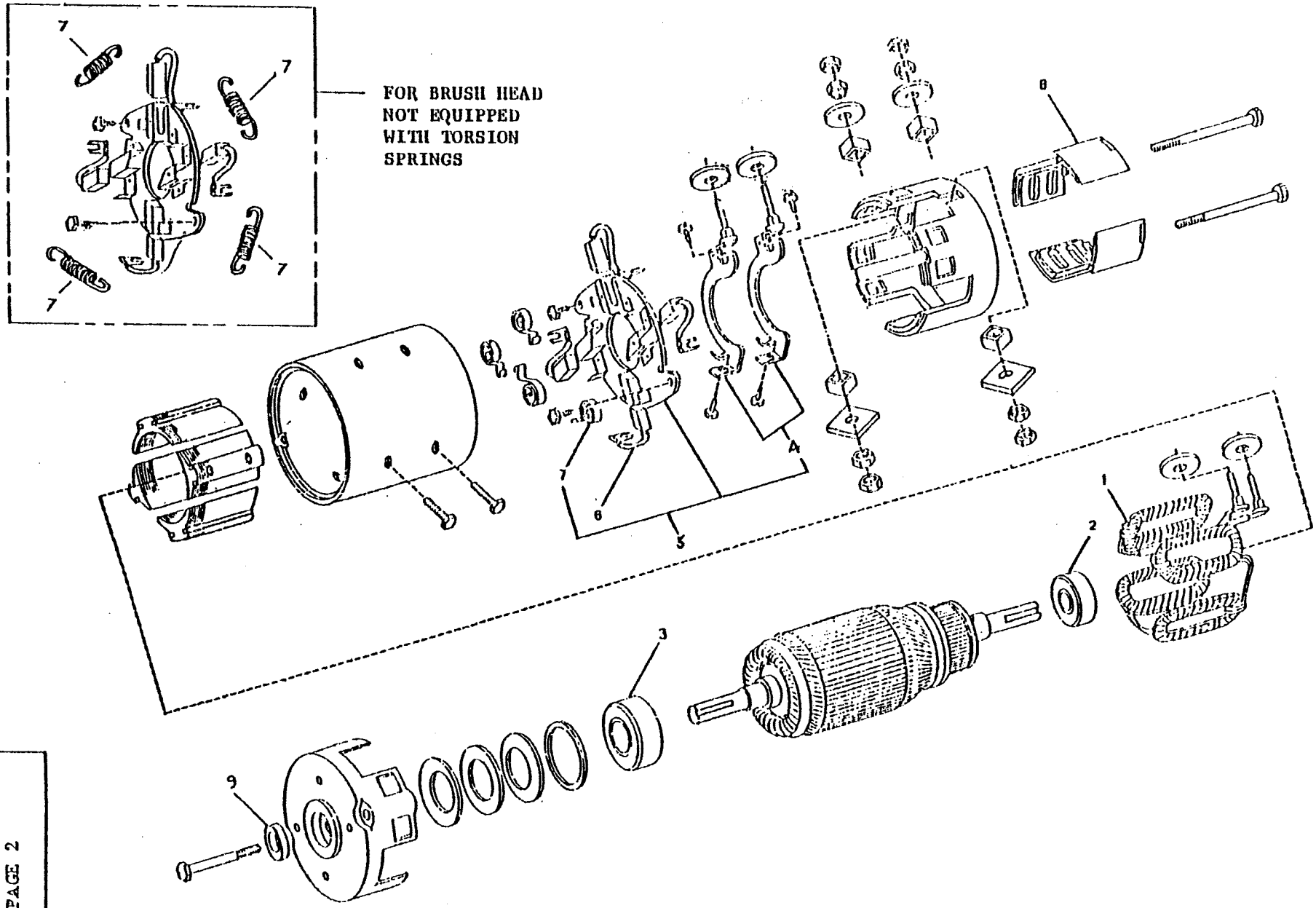

SECTION J2M
PAGE 2

NO.	DESCRIPTION	LENGTH	QUAN.	REVISED DATE	REVISION

TOL. FRAC. ± DEC. ±	FIGURE 5M	MOTOR PARTS - G.E. MOTORS	TAYLOR DUNN MFG. CO.
SCALE NONE	SECTION J2M		2114 West Ball Rd.
DRAWN BY B.B.			Anaheim, Calif.
DATE 6-9-77			

SECTION J2M
PAGE 2

SECTION J2M
Page 3

ELECTRIC MOTORS
REFER TO FIGURE 5M

For D.C. Motor replacement parts, IT IS NECESSARY TO INCLUDE COMPLETE MOTOR NAME PLATE DATA WITH THE ORDER.

FIG. I.D. NO.	T-D PART NO.	DESCRIPTION	QTY.
Replacement parts for G.E. Motor 5BC48JB503, 5BC48JB531, 5BC48JB550 and 5BC48JB582			
5M-1	70-201-00	Field Coil Set (not used on G.E. Motor 5BC48JB582)	1
5M-1	70-202-00	Field Coil Set (For G.E. Motor 5BC48JB582)	1
5M-2	80-200-00	Ball Bearing - Commutator End	1
5M-3	80-504-00	Ball Bearing - Pulley End	1
5M-4	70-195-00	Set of two armature terminal & brush pair connectors, not used on motor 5BC48JB550 with suffix letter "C" or "D". Two required per motor. (included in 70-188-00)	2
5M-4	70-196-00	Armature terminal & brush pair connector, used only with motor 5BC48JB550 with suffix letter "C" or "D". Two required per motor. (included in 70-184-00).	2
5M-5	70-184-00	Brush holder, without brushes, including brush springs, armature terminal & brush pair connectors. Used only on motor 5BC48JB550 with suffix letter "C" or "D".	1
5M-5	70-188-00	Brush holder, without brushes, including brush springs, armature terminal & brush pair connectors. Not used on motor 5BC48JB550 with suffix letter "C" or "D".	1
5M-6	70-101-00	Motor Brush	4
5M-7	85-412-00	Brush Spring, Torsion	4
5M-8	30-801-00	Brush Inspection Cover	4
5M-9	45-506-00	Oil Seal	1
5M-10	70-210-62	Motor Terminals Insulator Kit	1
Replacement parts for G.E. Motors 5BC48JB251 & 5BC48JB265			
5M-2	80-200-00	Ball Bearing, Commutator End	1
5M-3	80-504-00	Ball Bearing, Pulley End	1
5M-5	70-185-00	Brush Holder Assy.	1
5M-6	70-100-00	Motor Brush	4
5M-7	85-401-00	Brush Spring, Extension	4
5M-9	45-506-00	Oil Seal	1
Replacement Parts For G.E. Motor 5B6A8JB726			
	70-204-00	Field Coil Set	1
	80-209-00	Ball Bearing, Commutator End	1
	80-504-00	Ball Bearing, Pulley End	1
	70-172-00	Brush Holder Assy. With Brush Springs But Without Brushes	1
	85-412-00	Spring, Brush	4
	70-104-00	Armature Terminal & Brush Pair Connector	2
	45-506-00	Oil Seal	1

Brush Measurement Procedure For 726 Motor

With new brushes, A 1/16" drill rod can be inserted approximately .76" into brush measurement holes. Brushes should be replaced when rod can be inserted 1.56" into hole. This leaves approx. 1/8" allowable wear remaining.

SECTION J2M
PAGE 4

FIG. I.D. NO.	T-D PART NO.	DESCRIPTION	QTY.
Replacement Parts for G.E. Motor 5BC48JB67B & 5BC48JB114			
5M-2	80-205-00	Ball Bearing, Commutator End	1
5M-3	80-204-00	Ball Bearing, Pulley End	1
5M-6	70-100-00	Motor Brush Assy	4
5M-7	80-401-00	Brush Spring, Extension	4
Replacement Parts for T.D. Motor 388P3816 & Baldor 45-39W03, 45 39W16,45-39W19			
5M-2	80-200-00	Ball Bearing, Commutator End	1
5M-3	80-504-00	Ball Bearing, Pulley End	1
5M-5	70-187-00	Brush Head Assy, Complete with Brushes	1
5M-6	70-101-00	Motor Brush	4
5M-8	30-803-00	Brush Inspection Cover	4
5M-9	45-506-00	Oil Seal	1
Replacement Parts for G.E. Motor 5BCG56EA17			
5M-2	80-201-00	Ball Bearing, Commutator End	1
5M-3	80-504-00	Ball Bearing, Pulley End	1
5M-5	70-189-00	Brush Holder Assy	1
5M-6	70-101-00	Motor Brush Assy	4
5M-7	85-412-00	Brush Torsion Spring	4
Replacement Parts for G.E. Motor 5BC49JB122			
5M-2	80-200-00	Ball Bearing, Commutator End	1
5M-3	80-504-00	Ball Bearing, Pulley End	1
5M-4	70-185-00	Brush Holder	1
5M-6	70-100-00	Motor Brush	4
5M-7	85-401-00	Brush Extension Spring	4
5M-9	45-506-00	Oil Seal	1
Replacement Parts for G.E. Motor 5BC49JB305			
5M-1	70-203-00	Field Coil Set	1
5M-2	80-200-00	Ball Bearing, Commutator End	1
5M-3	80-504-00	Ball Bearing, Pulley End	1
5M-4	70-195-00	Armature Terminal to Brush	2
5M-5	70-188-00	Brush Holder assembly	1
5M-6	70-101-00	Motor Brush	4
5M-7	85-412-00	Brush Extension Spring	4
5M-8	30-802-00	Brush Inspection Cover	4
5M-9	45-506-00	Oil Seal	1
5M-10	70-210-62	Motor Terminals Insulator Kit	1

SECTION J2M
PAGE 5

FIG. I.D. NO.	T-D PART NO.	DESCRIPTION	QTY.
Replacement Parts for Taylor-Dunn Motor 388P381A			
5M-2	80-204-00	Ball Bearing, Commutator End	1
5M-3	80-205-00	Ball Bearing, Pulley End	1
5M-5	*70-187-00	Brush Head Assy. Complete with Brushes *Not supplied as original equipment on A series motor but must be used as replacement part.	1
5M-6	*70-102-00	Motor Brush with Wire Hook *Replacement part for original A series motor NOT converted to new brush head assy. 70-187-00.	4
5M-6	70-101-00	Motor Brush for A series motor converted to new brush head 70-187-00.	4
5M-7	*85-413-00	Brush Torsion Springl *Replacement part for original A series motor Not converted to new brush head assy. 70-187-00.	4
5M-9	45-506-00	Oil Seal	1
5M-8	30-802-00	Brush Inspection Cover	1

SECTION J4
PAGE 1

MAINTENANCE, SERVICE AND PARTS LIST
MECHANICAL CONTROL LINKAGE
REFER TO FIGURE 7

The mechanical control linkage operates the various controls and mechanisms located throughout your vehicle.

The accelerator system consist of the operating pedal and shaft extension, connecting rods and adjusters, and return springs.

The foot park brake consist of the operating pedal, associated connecting cable cable and return springs.

The service brake system consists of the foot pedal and pivot shaft assembly, and a separate brake operating cable and return spring.

The automatic seat park brake system consist of the pivoted seat assembly, the operating cable or rods, the brake apply spring, adjustable tension device and its connecting linkage.

Both the accelerator and brake systems pivot on self lubricated bearings on corrosion resistant shafts. Should the bearings become worn, they are easily replaced.

All wear points should be lubricated monthly. Refer to Maintenance Guide Section D and Lubrication Diagram Section E for proper application of lubricants.

For service and adjustments refer to the following sections:

Section J2 - For hand brake and mechanical brake or "Deadman" brake service and adjustments.

Section J6 - For accelerator service and adjustments.

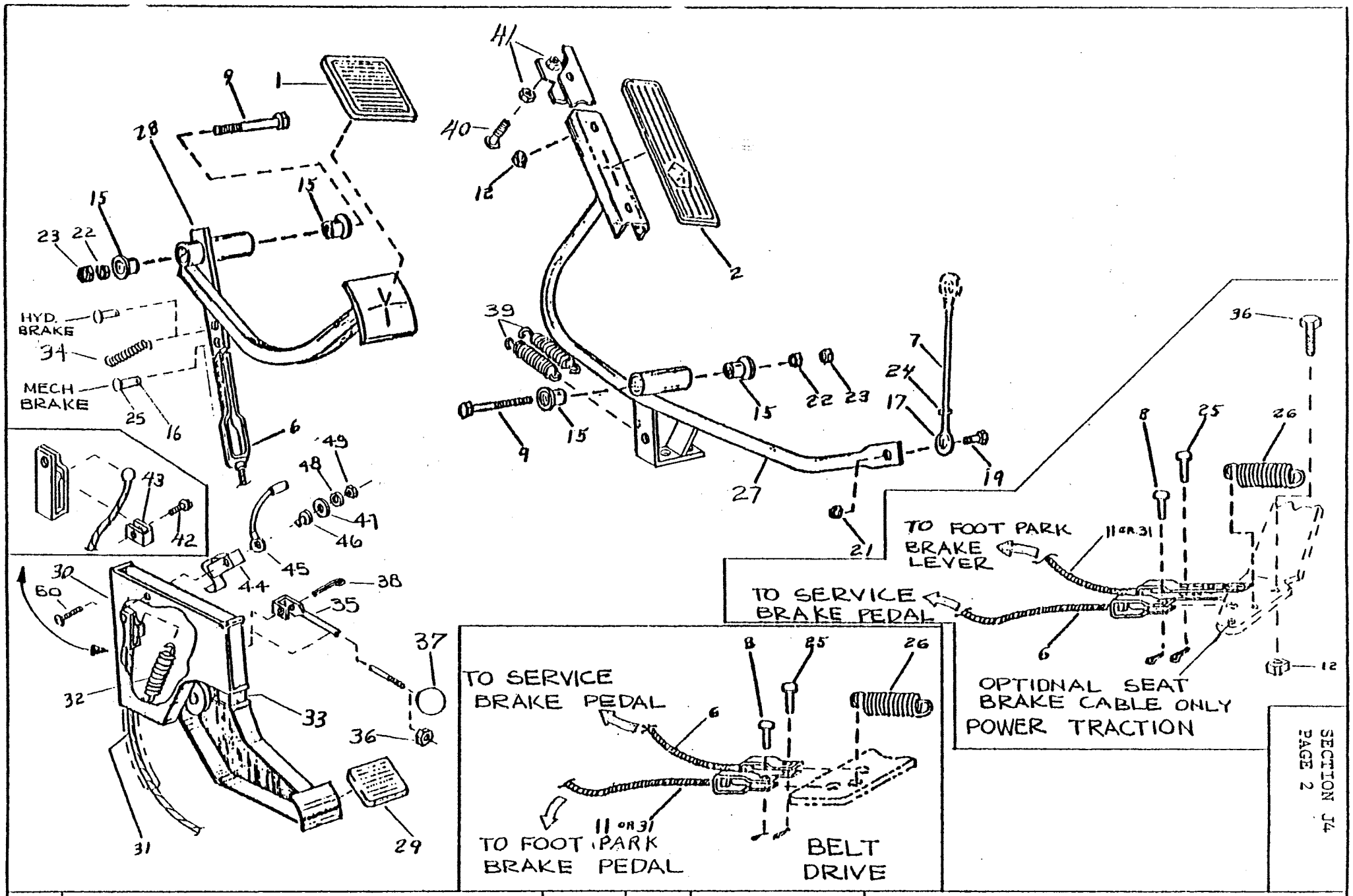

NO.	DESCRIPTION	LENGTH	QUAN.	REVISED DATE	REVISION

TOL. FRAC. ± DEC. ±
SCALE
DRAWN BY J.M.
DATE 8-2-50

FIGURE 7
SECTION J4

MECHANICAL CONTROL LINKAGE

TAYLOR DUNN MFG. CO.
2114 West Ball Rd.
An n, Calif.

SECTION J4
PAGE 3

MECHANICAL CONTROL LINKAGE
REFER TO FIGURE 7

FIG. I.D. NO.	T-D PART NO.	DESCRIPTION	QTY. REQ.
7-1	98-200-00	Brake Pedal Pad	1
7-2	98-254-00	Accelerator Pad (Aluminum)	1
7-6	96-823-00	Adjustable Cable Assembly - Service Brake	1
7-7	50-002-00	Rod, 1/4 - 28 x 5-1/8 Long	1
7-8	96-771-00	Clevis Pin, 3/8 x 3/4	1
7-9	88-147-24	1/2 x 4 Stainless Steel Screw	2
7-11	96-824-10	Adjustable Cable Assembly, for Foot Operated Parking Brake with Power Traction	1
7-11	96-824-11	Adjustable Cable Assembly for Foot Operated Parking Brake with Belt Drive	1
7-12	88-069-87	1/4 N.C. Fastite Nut	2
7-14	88-109-81	3/8 N.C. Lock nut	4
7-15	32-215-00	Bushing, Plastic with Flange	4
7-16	88-517-09	3/32 x 3/4 Long, Cotter Pin	3
7-17	86-503-98	Rod End - 1/4 - 28 Left Hand Thread	1
7-18	88-108-60	3/8 Washer	1
7-19	88-060-13	1/4 x 1-1/4 Hex Head Cap Screw	1
7-20	88-068-62	1/4 Lock Washer	1
7-21	88-069-81	1/4 N.C. Lock Nut	1
7-22	88-149-80	1/2 N.C. Hex Head Nut	2
7-23	88-149-81	1/2 N.C. Lock Nut	2
7-24	97-211-00	1/4 - 28 N.F. Nut, Left Hand Thread	1
7-25	96-773-00	Clevis Pin, 5/16	2
7-26	85-270-00	Brake Return Spring, 1-1/4 O.D. x 4-3/8	1
7-27	00-370-12	Accelerator Pedal with Extension Arm and Plastic Bearings.	1
7-28	00-370-11	Service Brake Pedal w/Plastic Bearings	1
7-29	98-201-10	Pad, Park Brake Pedal	1
7-30	51-342-10	Foot Park Brake Assy. W/Switch	1
7-31	96-824-10	Foot Park Brake Actuating Cable Power Traction	1
7-31	96-824-11	Foot Park Brake Actuating Cable, Belt Drive	1
7-32	85-402-00	Pedal Return Spring, 1/2 O.D. x 1-3/4	1
7-33	98-755-00	Bumper, Brake Pedal 3/4 Sq.	1
7-34	85-295-00	Spring, Brake Pedal Return Used with Seat Option on Stop Light Option	1

SECTION J4
PAGE 4

MECHANICAL CONTROL LINKAGE
REFER TO FIGURE 7

FIG. I.D. NO.	T-D PART NO.	DESCRIPTION	QTY. REQ.
7-35	50-131-00	Rod, Foot Park Brake Release	1
7-36	88-069-80	1/4 Hex Head Nut	2
7-37	95-910-00	Knob, Red	1
7-38	88-527-06	Cotter Pin	1
7-39	85-233-00	Spring Extension, Accelerator Return	2
7-40	88-082-10	Bolt, Carriage 5/16 x 1	1
7-41	88-089-80	Nut, Hex Head 5/16	2
7-42	88-837-06	Screw, Metal #14 x ½	1
7-43	97-212-00	Speed Nut, Tinnerman	1
(Not Shown)	85-201-00	Release Lever Spring Extension, Foot Park Brake	1
(Not Shown)	85-012-00	Compression Spring for Foot Park Brake Paul, .04 O.D. x 1.12	1
7-44	71-136-00	Switch, Foot Park Brake	1
7-45	75-130-20	Wire Harness, Foot Park Brake (Single Wire)	1
7-46	32-212-10	Screw Insulator #6 x ¼ Long	1
7-47	97-170-00	Insulated Washer 3/4 O.D.	1
7-48	88-048-61	#10 SAE Washer	1
7-49	88-019-86	#6-32 Locknut, Fiber Insert	1
7-50	88-014-13	#6-32 x 1-¼ NC Round Head Screw	1

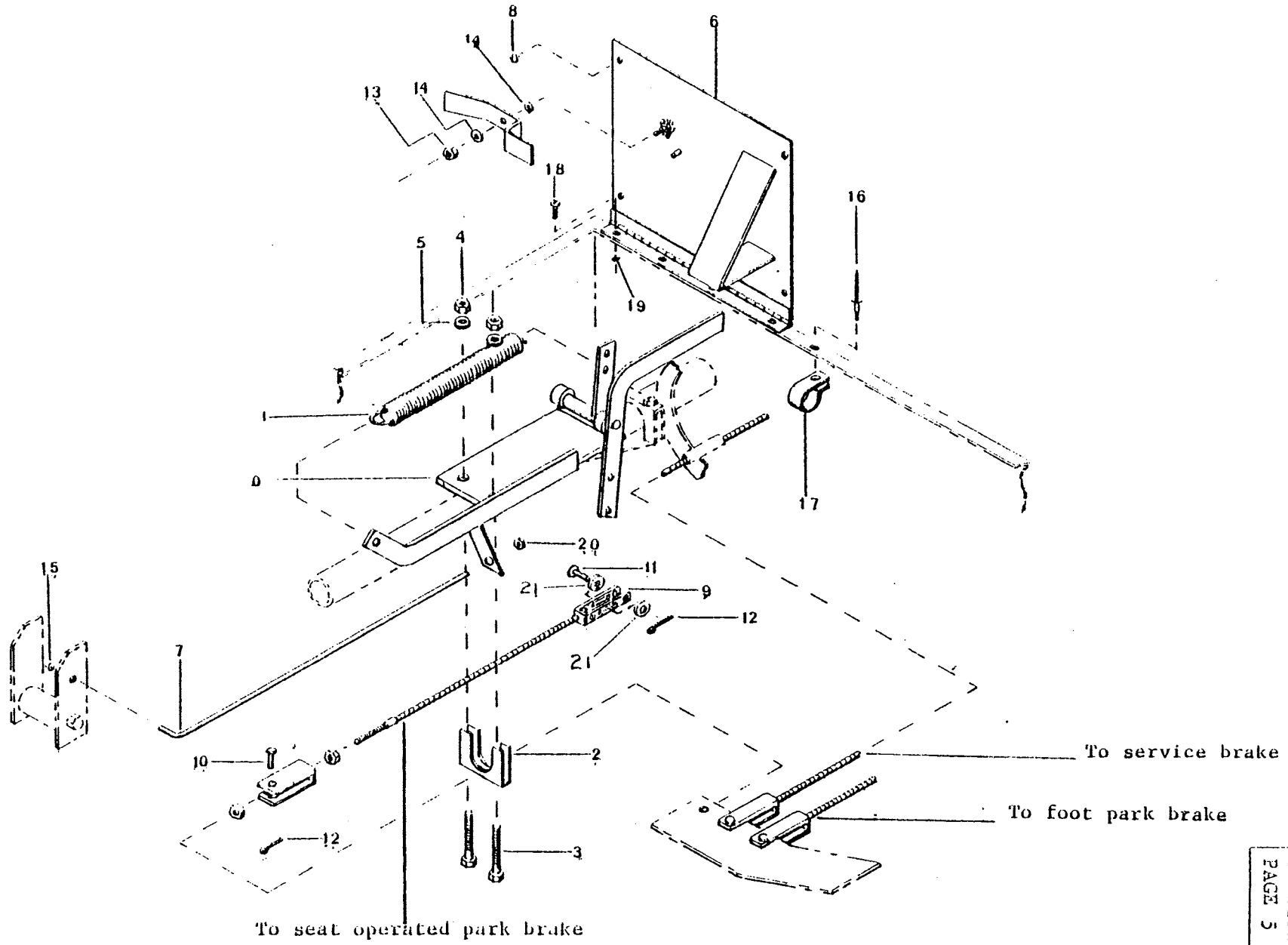

SECTION J4
PAGE 5

NO.	DESCRIPTION	LENGTH	QUAN.	REVISED DATE	REVISION

TOL. FRAC. ± DEC. ±	FIGURE 7A	SEAT OPERATED PARKING BRAKE	TAYLOR DUNN MFG. CO.
SCALE NONE	SECTION J4		2114 West Ball Rd.
DRAWN BY J.M.			Anaheim, Calif.
DATE 1-5-80			

SECTION J4
PAGE 5

SECTION J4
PAGE 6

SEAT OPERATED PARK BRAKE
REFER TO FIGURE 7A

FIG. I.D. NO.	T-D PART NO.	DESCRIPTION	QTY. REQ.
7A-0	50-659-00	Seat Brake Lever Assembly	1
7A-1	85-280-00	Spring, Extension	1
7A-2	85-487-50	Bracket, Spring Mounting	
7A-3	88-140-22	Screw, Hex Head Cap 1/2 x 3-1/2 NC	2
7A-4	88-149-80	Nut, Hex Head 1/2 NC	2
7A-5	88-148-62	Washer, Lock 1/2	2
7A-6	50-659-50	Plate, Seat Mounting	1
7A-7	50-225-50	Rod, Wiring Harness Support	1
7A-8	88-837-11	Screw, Phillips Metal #14 x 1	6
7A-9	96-818-11	Cable Assembly, Adjustable	1
7A-10	96-771-00	Pin, Clevis 3/8 x 3/4	1
7A-11	96-773-00	Pin, Clevis 5/16 x 1	1
7A-12	88-517-11	Pin, Cotter 3/32 x 1	2
7A-13	88-109-81	Nut, Lock 3/8 NC	1
7A-14	88-108-60	Washer, 3/8	2
7A-15	88-577-90	Cap Nut, 1/4 Press-On	1
7A-16	88-737-08	Rivet, Aluminum 3/16 x 5/8	1
7A-17	96-630-00	Clamp, Rubber Lined 5/8 ID	1
7A-18	88-060-09	Screw, Hex Head Cap 1/4 x 3/4 NC	4
7A-19	88-069-87	Nut, Fastite, 1/4 NC	4
7A-20	98-603-00	Grommet, Rubber 3/8 Id	1
	90-158-99	Seat Cushion, Left Side, Seat Operated Park Brake, (Specify Color)	1
	90-154-99	Seat Cushion, Individual, (Specify Color)	1
	91-403-10	Support, accessory Tray with Clip for Seat Brake Application	1
7A-21	88-088-61	Washer 5/16	2

SECTION J6
PAGE 1

MAINTENANCE, SERVICE AND PARTS
EM MASTER CONTROL SWITCH 61-845-45
REFER TO FIGURE 9

GENERAL:

The Em Master Control Switch is located below the seat, and is readily accessible when the seat is raised. The left side, operated by the hand lever which projects into the passenger compartment, controls direction of travel. The right sige, operated by the accelerator pedal, controls the vehicle speed by regulating the voltage applied to the motor, using coils of nichrome resistance wire.

It is recommended that all terminal connections be checked and tightened at least once a month. If a terminal bolt or wire becomes loose, sufficient heat will be generated to cause permanent damage at the connection.

The nuts which secure the wire terminals to the contact buttons on the forward/reverse rotor must NOT be used to tighten the contact buttons to the rotor board. The contact buttons must be free to rotate in order to avoid wire breakage.

MAINTENANCE:

CAUTION: Before working on EM Master Control Switch or any part of the vehicle electrical system, disconnect both main battery leads, place Forward/Reverse Switch in NEUTRAL, turn key OFF and remove from switch. Set Parking Brake.

On a Monthly Basis:

Cleaning Procedure:

Clean grease and contaminants off Contact Plate and Power Bar area with a rag or by power wash (steam) cleaning. CAUTION: Make certain that Forward/Reverse switch is in NEUTRAL before cleaning and DO NOT use a flammable agent to clean switch component parts or any electrical part of the vehicle. Clean the areas between the Power Bars with an electrically non-conductive device such as a wooden stick, piece of plastic, ear swab, etc. Contaminated grease and foreign matter lodged between the Power Bars can cause shorting across the Power Bars and result in faulty vehicle operation.

SECTION J6
PAGE 2

Lubricating Procedure (61-845-45 EM Switch only):

CAUTION: Do Not use this lubricating procedure on earlier model switches without solenoid.

Apply a small quantity (between 1/3 and 1/2 oz.) of Taylor-Dunn Grease 94-421-00 to the Power Bars and Speed Control Plate. A medium-soft, non-metallic paint brush (no metal band) makes an ideal grease applicator. CAUTION: Do Not apply grease to switch with any object that contains metal or is electrically conductive.

Apply a very small portion of the grease to and slightly above the path wiped by the Lower Contact Button as it passes over the Power Bars. To achieve maximum lubricating results, concentrate a greater amount of the grease on Power Bars 4 and 5. (See illustration below).

CAUTION

Never use a substitute grease that contains graphite, metal particles or is electrically conductive.

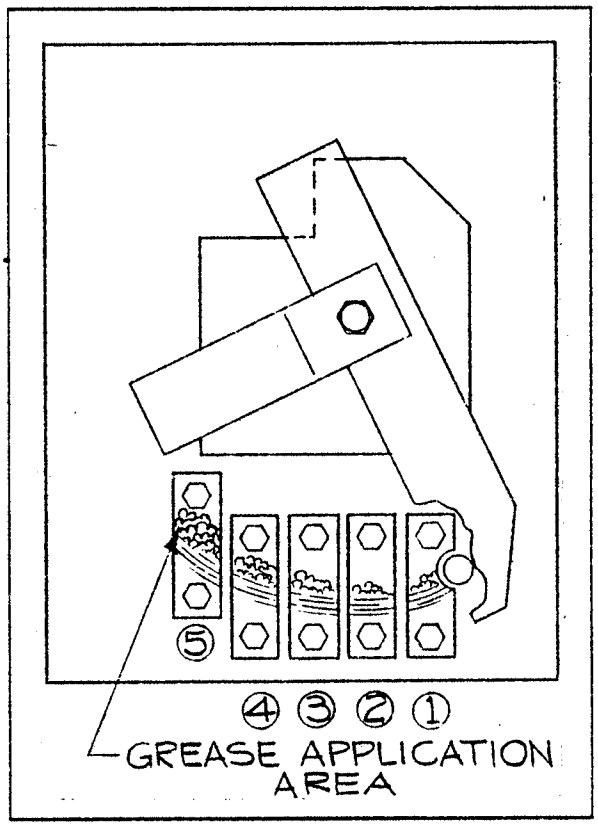

NOTE: 1) Overall, EM Switch 61-845-45 runs cooler than its predecessors due to design improvements. Power Bars 1,2 and 3 operate at a relatively cool temperature. This was achieved by reducing electrical arcing to an absolute minimum at switch turn ON/OFF plus low heat build-up design. Power Bars 4 and 5 (full speed) generate relatively more heat than Bars 1,2 and 3. The net result is that grease on Power Bars 1,2 and 3 does not tend to flow and spread evenly. Conversely, grease on Power Bars 4 and 5 tends to melt sufficiently so that the lower Power Button can spread it evenly across the entire contact area. In summary, grease properly applied will result in better lubrication and longer switch life.

SECTION J6
PAGE 3

NOTE: (CONT'D)

2) Taylor-Dunn grease, Part No. 94-421-00, is highly recommended as the best lubricant for Taylor-Dunn Master Control Switches. This grease possesses superior lubricating characteristics coupled with a very high drop point of 500° F. It will not burn or melt as readily as other commercial greases and tends to maintain its consistancy for a longer period of time.

Routine Maintenance:

While cleaning and lubricating the switch, make a careful check for loose nuts and bolts, particularly in the area of the power resistors. Loose connections at the power resistors can result in corrosion and burning of the resistors. The only two (2) wires that should be free to turn are the Forward/Reverse Switch leads. Another important check is the wire connections on top of the solenoid. Loose connections can cause failure of the solenoid due to overheating, corrosion, etc. Over-tightened connections can result in cracked or broken cases causing eventual failure of the solenoid. To insure the wire connections are properly connected to the solenoid, carefully apply 90 inch pounds of torque to the 5/16" stud nuts and 50 inch pounds of torque to the 3/16" stud nuts. Connections should be snug with lock washers fully compressed. Remember, excessive torque is just as bad as having a loose connection.

CAUTION: Before repairing or adjusting this switch, always disconnect both the positive and negative battery leads.

This is also an ideal time to check other key vehicle components such as batteries, tires, drive belts, chains, etc. Be sure to consult Section D for maintenance guide information.

On a Weekly Basis:

Check switch contact path on plate and power bars for lubricant presence. If required, apply more lubricant (No. 94-421-00). Also check for contaminents. Heavy concentrations of dirt, grass, sand or the like should be cleaned out as outlined in monthly maintenance.

Clean and check batteries as outlined in the maintenance manual. Look for loose wire connections and corrosion at terminals.

Adjustment of Speed Rotor Travel - EM Switch (Refer to Diagram B):

NOTE: Rotor travel adjustment is set at the factory and will require adjustment only if the vehicle is subjected to severe damage or if a new switch assembly is installed.

1. Adjust pedal stop bolt so that when the bolt head contacts the floor mat ther is 1/4" clearance between the accelerator pedal extension and the rear of the floor panel. (See Diagram B)

2. Block accelerator pedal in full ON position with pedal stop bolt in contact with floor mat.

3. Adjust the "rod end" of the Adjustable Accelerator Link so that the lower contact button clears the 4th speed bar by 1/8". This will insure approximately 95% of the contact button is toughing the high speed bar.

SECTION J6
PAGE 4

Adjustment of Speed Rotor Travel - EM Switch (Con't)

4. Remove blocking and operate accelerator pedal several times, using normal force. Re-check position of the lower contact button with pedal fully depressed. If it fails to clear the 4th speed bar by 1/8", re-adjust the rod end position accordingly and re-check the clearance again after operating the pedal. Continue re-adjusting as necessary until the desired condition is obtained and remains constant. NOTE: The lower contact button should not travel beyond the 5th speed power bar.

5. With the pedal in neutral position, the lower contact button must clear the 1st speed bar by a minimum of 1/8" and rest on the neutral button. This condition should automatically occur when the high speed adjustment is properly set.

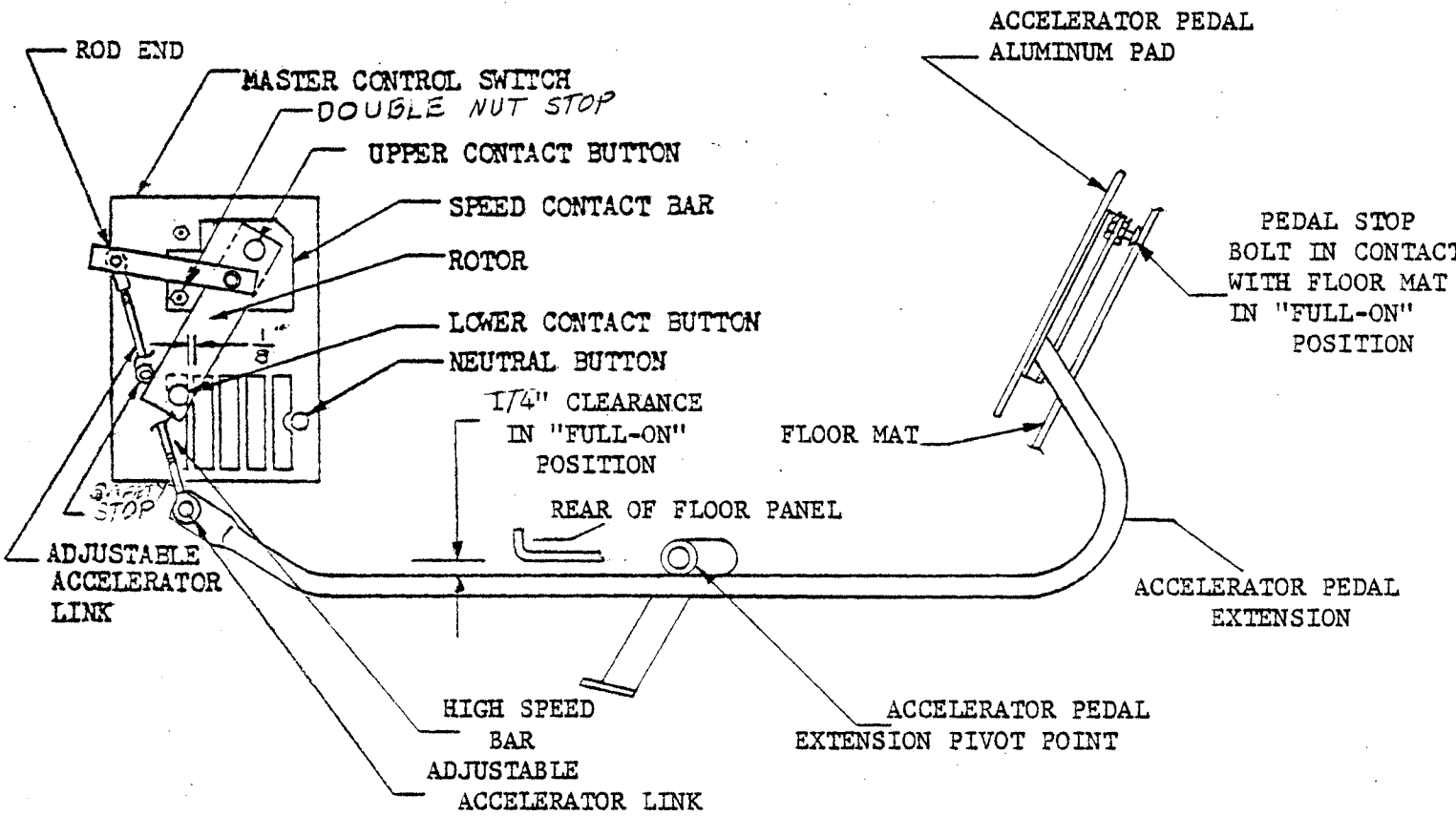

Diagram B - Rotor Travel Adjustment - EM Switch

(In Full-On Position)

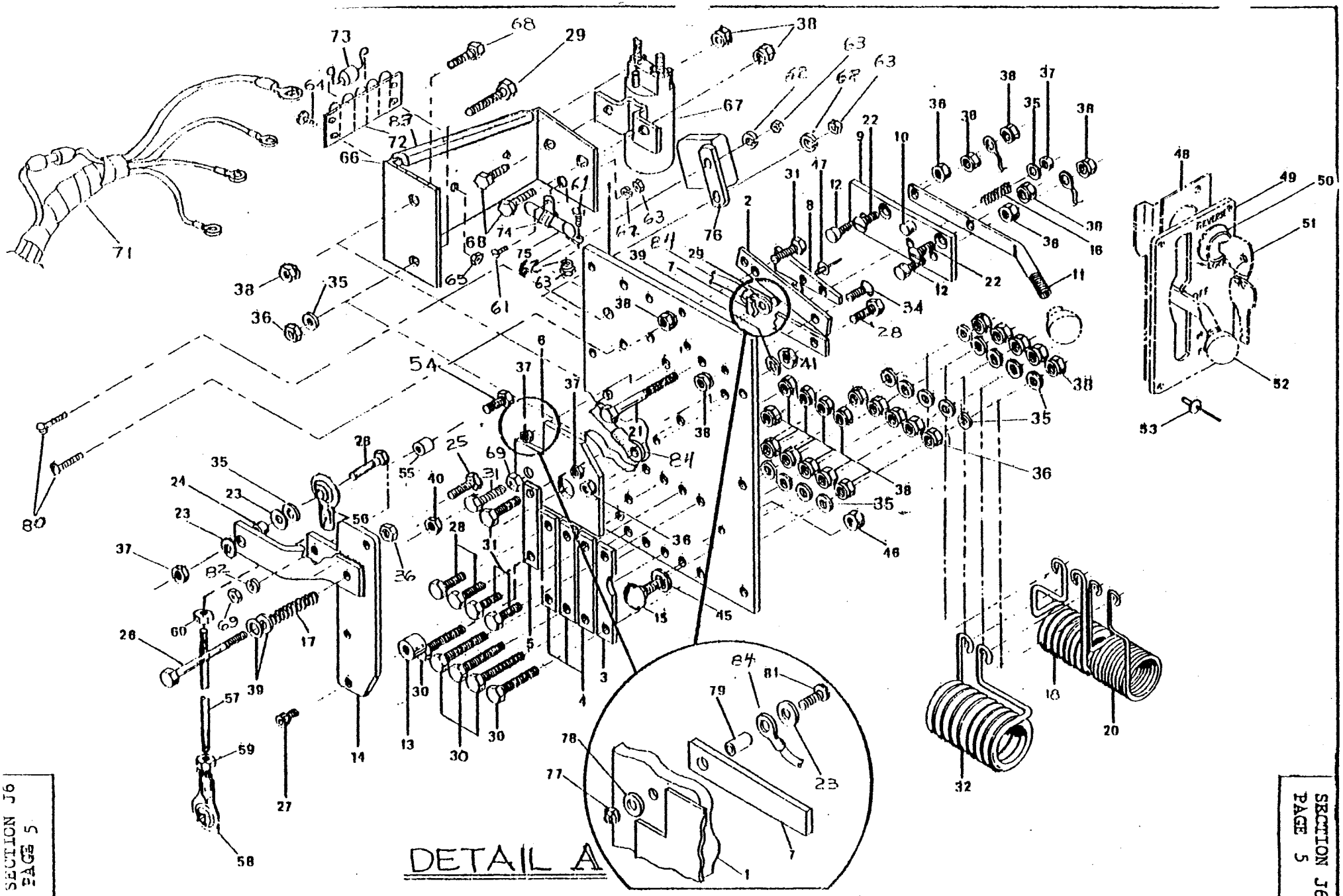

SECTION J6
PAGE 5

DRAWN BY JM

FIGURE 9
SECTION J6

MASTER CONTROL SWITCH WITH SOLENOID
AND FOOT PARK BRAKE BUZZER

TAYLOR DUNN MFG. CO.
2114 West Ball Rd.
Anaheim, Calif.

PAGE 6

MASTER CONTROL SWITCH - WITH SOLENOID & BUZZER
REFER TO FIGURE 9

FIG. I.D. NO.	T-D PART NO.	DESCRIPTION	QTY. REQ.
9-0	61-845-45	Master Control Sw. W/Solenoid & Ft Park Brake Buzzer	1
9-1	61-845-01	Mounting Board, EM Master Control Switch	1
9-2	61-831-10	Power Bar With Countersunk Hole	1
9-3	61-831-12	Power Bar With Notch	1
9-4	61-831-13	Power Bar	4
9-6	61-831-20	Speed Contact Plate	1
9-7	61-840-00	Forward/Reverse Power Bar	1
9-8	61-839-51	Neutral Board	1
9-9	61-846-50	Rotor Board	1
9-10	61-846-51	Stabilizer Button	1
9-11	61-841-00	Handle	1
9-12	71-030-58	Contact Button	2
9-13	61-849-50	Contact Button	1
9-14	61-849-55	Rotor Arm for Switch 61-845-45	1
9-15	88-102-11	Neutral Button (3/8 x 1 Carriage Bolt)	1
9-16	85-034-00	Spring 7/16 x 2	1
9-17	85-060-00	Spring 5/8 x 2-1/2	1
9-18	78-212-63	Resistor Coil #5 Wire - 6 Turns	1
9-20	78-212-51	Resistor Coil #9 Wire - 10 Turns	1
9-21	88-060-20	1/4 NC x 3 Hex Head Cap Screw	1
9-22	88-066-09	1/4 NC x 3/4 Flat Head Machine Screw	2
9-23	97-170-00	Washer, Insulated	3
9-24	32-212-50	Plastic Bushing, 1/4 ID x 1/4 Long	1
9-25	96-300-09	Bronze Bolt	1
9-26	88-081-22	5/16 NC x 3-1/2 Hex Head Cap Screw	1
9-27	88-047-06	10-32 x 1/2 Socket Head Cap Screw	1
9-28	88-060-11	1/4 NC x 1 Hex Head Cap Screw	4
9-29	88-060-13	1/4 NC x 1-1/4 Hex Head Cap Screw	2
9-30	88-067-20	1/4 NC x 3 Hex Head Tap Bolt	4
9-31	88-060-14	1/4 NC x 1-1/2 Hex Head Cap Screw	5
9-32	78-212-62	Resistor Coil #8 - 8 Turns	1
9-34	88-066-11	1/4 NC x 1 FH Machine Screw	1
9-35	88-068-61	1/4 SAE Washer	7
9-36	88-069-80	1/4 NC Hex Nut	3
9-37	88-069-81	1/4 NC Hex Lock Nut	2
9-38	88-069-87	1/4 NC Fastite Nut	33
9-39	88-088-60	5/16 Flat Washer	3
9-40	88-089-91	5/16 NC Hex Head Jam Nut	1
9-41	88-089-81	5/16 Hex Lock Nut	1
9-45	97-173-00	Washer, Aluminum	1
9-46	88-109-87	3/8 NC Fastite Nut	1

SECTION J6
PAGE 7

MASTER CONTROL SWITCH - WITH SOLENOID & BUZZER

REFER TO FIGURE 9

FIG. I.D. NO.	T-D PART NO.	DESCRIPTION	QTY. REQ.
9-47	88-737-11	Aluminum Rivet, 3/16 Dia. x 1" Long	1
9-48	97-314-10	Lock Plate & Lock Cylinder Assy.	1
9-49	94-307-00	Forward/Reverse Switch Plate	1
9-50	71-040-55	Lock Assy. with Two Keys	1
9-51	71-040-74	Key Only (Give Lock No. or Vehicle Serial No.)	1
9-52	95-907-00	Plastic Knob	1
9-53	88-727-06	Aluminum Rivet 5/32 Dia. x 1/2 Long	4
9-54	96-302-01	Screw, Bronze 5/16 NC x 1 Hex Head	1
9-55	61-849-51	Spacer, Rotor Contactor	1
9-56	86-503-99	Rod End, Spherical Bearing - Right Hand Thread	1
9-57	50-002-00	Rod, Accelerator Adjusting, 4-1/8 Long	1
9-58	86-503-98	Rod End, Spherical Bearing - Left Hand Thread	1
9-59	97-211-00	Nut, 1/4 NF Left Hand Thread	1
9-60	88-079-80	1/4-28 NF Hex Nut	1
9-61	88-025-06	Screw, Machine, Truss Head, 8-32 x 1/2	3
9-62	38-028-62	Washer, Lock, #8	5
9-63	88-029-80	Nut, Hex, 8-32	5
9-64	88-014-08	Screw, Machine, Round Head, 6-32 NC x 5/8	2
9-65	88-019-86	6-32 NC Hex Nut	2
9-66	72-555-00	Bracket - Solenoid Mount	1
9-67	72-501-10	Solenoid	1
9-68	88-060-09	1/4 x 3/4 NC Hex Head Cap Screw	3
9-69	88-089-80	5/16 Hex Nut	2
9-70	75-231-00	Battery Jumper	1
9-71	751130-00	Harness, Wiring	1
9-72	79-865-00	Terminal Strip, 4 Place	1
9-73	79-730-00	Diodes, 6 AMP	1
9-74	96-630-00	Clamp, 5/8 I.D.	1
9-75	78-301-00	Resistor, 25 OHM, 50 Watt	1
9-76	73-006-00	Buzzer	1
9-77	88-049-86	10-32 Flexlock Nut	1
9-78	88-048-61	#10 SAE Washer	1
9-79	32-209-00	Bushing, Teflon 1/4" OD x .031 Wall x 3/4" Long	1
9-80	88-025-09	Screw, Machine, Truss Head, 8-32 x 3/4	2
9-81	88-045-11	10-32 x 1 Truss Head Machine Screw	1
9-82	88-088-62	Washer, Lock, 5/16	1
9-83	94-035-11	Strip, Plastic Trim, 3-1/2 Long	1
9-84	75-206-50	Wire, Jumper, 4-1/2 Long	1
(Not Shown)	96-603-00	Clamp, Cable Tie, 14"	1
(Not Shown)	75-234-00	Jumper, Battery	1

SECTION J7
PAGE 1

MAINTENANCE PROCEDURES

GENERAL ELECTRICAL SYSTEM

Your electrical system has been installed with care, utilizing quality materials for safe trouble free service. Proper fuses have been located where necessary to prevent unsafe overloads and protect the wiring from being damage from short circuits.

Little care will be required, except for an occasional visual inspection for loose connections or some unusual condition causing the insulation to be rubbed off on a wire.

Normal replacement parts such as light bulbs, fuses, flasher, etc., have been arranged for simple changing by plug in devices or conveniently located terminals

CAUTION: A blown fuse is usually indicative of a short circuit or faulty device Care should be exercised to remove the faulty condition before replacing fuse. DO NOT place larger capacity fuses or "jumpers" to overcome the condition as serious wiring damage can occur.

Refer to the following sections for more detailed information on the main power and electrical components:

Section G	-	Wiring Diagram
Section J2M	-	Motor
Section J6	-	Speed Control and Main Power Switching
Section J8	-	Batteries and Charger

Refer to the following page for a listing of electrical parts.

SECTION J7
PAGE 2

ELECTRICAL PARTS

T-D PART NO.	DESCRIPTION	QTY.
71-100-00	Light Switch	1
71-111-00	Brake Light Switch (Mechanical Operation)	1
71-130-00	Micro Switch	1
72-005-00	Chrome Headlight Fixture with 4" Sealed Beam Bulb	1
72-407-00	Headlight Mounting Bracket	1
72-072-00	4" Sealed Beam Headlight Bulb	1
73-004-00	Horn, 12 Volt	1
72-022-00	Taillight or Tail/Stop Light Fixture, 4" Rubber Mount	1
75-082-00	Accessory Wiring Harness (Horn & Lights)	1
75-081-00	Power Wiring Harness	1
77-200-00	Hydrometer	1
77-201-00	Battery Filler	1
78-010-00	Secondary Fuse and Holder - Inline Type	1
79-823-00	20 Amp Fuse to Fit Fuse Holder	1
75-231-00	Battery Jumper - #6 Wire - 10-1/4 Long with Terminals	5
75-234-00	Battery Jumper - #6 Wire - 18-1/4 Long with Terminals (One Used to Connect Battery Positive to F/R Switch)	2
79-844-00	Circuit Breaker	1
76-012-00	Charging Receptacle	1
76-002-00	Charging Plug	1
74-007-00	Cigarette Lighter	1
50-225-00	Wiring Harness Support Rod - 1/4" Dia.	1
88-577-90	1/4" Dia. Push On Cap Fro Wiring Harness Support	1

SECTION J8
PAGE 1

MAINTENANCE PROCEDURES
BATTERIES

WARNING: Lead acid batteries continuously emit highly explosive gases. Flame or sparks must be kept away from the batteries at all times.

This emission is greatly increased during the charging process. Any area in which charging batteries are confined must be well ventilated, and flame or sparks must be kept out of the charging area and away from ventilator openings. DO NOT disturb battery connections while batteries are being charged.

The lead acid battery (or batteries) will furnish all power required by your vehicle. Two types are generally employed. The electric vehicle type battery pack, commonly used, can be expected to have a life of approximately 2 years, or 350 to 400 cycles. One cycle is the discharging and charging of the battery within proper limits. The heavy duty industrial type of battery has a life of approximately 7½ years, or 1800 cycles, with appropriate use and care.

It cannot be over emphasized how important good maintenance procedures and careful care of your batteries will affect their useful life. It is therefore recommended that a comprehensive maintenance program be established and adhered to throughout the life of your vehicle. A 5 point program is outlined below to assist you in understanding and establishing good battery care.

1. CORRECT CHARGING

Poor charging practices are responsible for more short battery life than any one other item. The charging equipment must be properly maintained and adjusted to give a charge which the battery will accept with maximum efficiency. Two things are involved in correct charging. These are the charging rate in amperes and the termination of the charge at the correct time. No amount of overcharging will increase the battery capacity or raise the specific gravity above its full charged condition.

Overcharging will reduce battery life. Undercharging will cause poor vehicle performance, and shorten the life of all electrical components, including the batteries. Refer to Service and Adjustment, Section J8, for proper methods to determine charge condition.

2. DISCHARGING - CAPACITY

Batteries are commonly rated in ampere hours at the six hour discharge rate to a final voltage of 1.75 per cell. They will deliver additional capacity in an emergency, but should not be required to do so regularly. The best way to avoid discharging is to prepare a rigid schedule for charging batteries which will insure against their being discharged beyond the limits of their capability.

3. WATERING

Water must be replaced from time to time. The frequency and quantity depends upon the watering space above the plates and the amount of gassing which the battery does on charge. Only approved or distilled water should be added to the battery. Water should be added after hydrometer or voltmeter readings have been taken. The liquid level within the battery raises as the gassing occurs. Thus filling after charging minimizes over-filling. However, the water level should cover the plates prior to charging.

SECTION J8
PAGE 2

MAINTENANCE PROCEDURES
BATTERIES

4. CLEANING

Batteries pick up various kinds of dirt and dust, depending on their surroundings and the type of service they are subject to. This is usually dry dirt, which can readily be blown off with low pressure air or brushed off. However, if cells are overfilled and electrolyte collects on the covers, the top of the battery becomes wet and stays wet, since the acid in the electrolyte does not evaporate. This moist surface in combination with certain kinds of dirt becomes electrically conductive and permits stray currents to flow externally over the top of the battery. These currents cause corrosion of cell posts, nuts, connectors and steel trays, which eventually become troublesome and expensive to repair.

When wet dirt accumulates on top of the battery, remove it by washing the battery with a strong solution of baking soda and hot water (1 lb. of soda to 1/2 gallon of water). A convenient brush to use is one having flexible bristles like an old paint brush. Continue the application of the soda solution until all fizzing stops, which indicates that the acid has been neutralized. Then rinse thoroughly with clear water.

Wet covers can be indication of overfilling, leaky seals at posts and covers or of excessive gassing during charge. When observed the cause should be determined and the abusive conditions corrected.

5. RECORDS

A battery record system is recommended for all vehicles. It is considered essential for large operations, and where minimum battery operating cost is desired. A properly supervised record system can be made to detect and call attention to such operating irregularities as:

a. Overcharging
b. Undercharging
c. Overdischarging
d. Excessive Water Consumption
e. Cleanliness
f. Worn out Batteries
g. Excessive Current Consumption on Trucks

It is not advisable to allow a battery to stand for a long period of time in a low state of charge. Doing so subjects the battery to excessive plate erosion and in cold climate conditions the electrolyte will freeze at a much higher temperature. For example, a fully charged battery will not freeze at temperatures near 60° below zero. Yet a battery in a very low state of charge may freeze at temperatures around 10° to 15° above zero.

A battery not in use maintains small amounts of chemical action which slowly tends to dissipate the charged condition. It is wise to re-charge a battery not in use every 1 to 2 months. If possible store the battery in a cool place, as the self discharge rate is increased with warmer temperatures.

SECTION J8
PAGE 2A

MAINTENANCE PROCEDURES
BATTERIES

6. Winter Storage

a. Before storing your vehicles in a sheltered area for the Winter Season, clean and check the charge level of the batteries according to the information contained in paragraphs 4 and 5 this section.

CAUTION: Before service personnel service the batteries, disconnect both main battery leads, place the Forward/Reverse Switch in Neutral, turn the key OFF and remove from switch. Set the parking brake. Service personnel should wear proper clothing and eye protection

b. Although not required, the following information is provided as a good maintenance practice to be followed when and where practical to perform.

1. Remove the batteries from the vehicles for cleaning.
2. Clean batteries according to instructions in Para. 4.
3. Clean heavy corrosion from each battery post and cable terminal with a wire brush.
4. Using baking soda and hot water solution, neutralize all battery acid corrosion in battery compartment. If necessary, use a wire brush on severe corrosion areas.
5. Flush battery compartment area with fresh water and dry compartment ara thoroughly.
6. Paint or apply light film of petroleum jelly to exposed metal surfaces.
7. After battery compartment has been properly treated reinstall batteries while taking special care to properly connect battery cables.

DANGER: Improper connection could cause a battery explosion and possibly result in personal injury and/or damage to the vehicle.

8. Check battery charge state according to information contained in Paragraph 5 this section.

BATTERY MAINTENANCE RECORD VEHICLE NO.:

Battery No.	Cell No.	Date Water OK or Low	Gravity Before Charge	Gravity After Charge	Date Water OK or Low	Gravity Before Charge	Gravity After Charge	Date Water OK or Low	Gravity Before Charge	Gravity After Charge	Date Water OK or Low	Gravity Before Charge	Gravity After Charge
	1												
1	2												
	3												
	1												
2	2												
	3												
	1												
3	2												
	3												
	1												
4	2												
	3												
	1												
5	2												
	3												
	1												
6	2												
	3												

1. CAUTION: Batteries emit explosive gasses. During normal operation the concentration of these gasses is rarely sufficient to be considered dangerous unless flame or sparks occur in the battery compartment close to the vent holes in the battery caps. It is important that this not be allowed to occur at any time. During the charging process, emissions are greatly increased. Any area in which charging batteries are confined must be well ventilated, and flame, sparks, or lighted ciagarettes must be kept out of the charging area and away from ventilator openings associated with the charging area. Battery connections must not be disturbed while batteries are being charged.
2. Do not fill an uncharged battery. Bring water level up to just cover the plates, and complete filling after battery is fully charged. Use distilled water. Fill only to level indicated on battery.
3. Batteries which require unusually frequent watering may indicate overcharging. Review charging practices and/or adjustment of transformer taps in charger.
4. Gravity should be kept between 1175 (30% charged) and 1260 (100% charged, and gravity readings of all cells should be within a 10 point range. When they are not, an equalizing charge should be applied. Refer to information under "Charging Time Chart" in Charger Handbook.
5. Periodically check for loose terminal posts or loose connections to terminal posts, but not while batteriew are being charged.
6. Keep tops of batteries clean,and free of moisture, grease, and acid films. Any of these can cause current leakage.
7. Keep weekly (or oftener) record as shown in above sample chart,for a new vehicle or when charging results seem unsatisfactory, until satisfactory charging continues for a four week period,then keep reeord on a monthly basis.

SECTION J8
PAGE 3

SECTION J8
PAGE 4

BATTERIES AND CHARGER

T-D PART NO.	DESCRIPTION	QTY.
75-231-00	Battery Jumper #6 Wire, 10-1/4" Long	3
75-234-00	Battery Jumper #6 Wire, 18-1/4" Long	3
76-012-00	Charging Receptacle, 30 AMP, 3 Prong	1
77-031-00	6 Volt, 190 A.H. Battery	6
77-042-00	6 Volt, 217 A.H. Battery	6
77-047-00	6 Volt, 244 A.H. Battery	6
77-200-00	Hydrometer	1
77-201-00	Battery Filler	1
79-332-30	Portable Charger, 36 Volt, 25 AMP, Line Compensated	1
79-320-00	Portable Charger, 36 Volt, 20 AMP, Automatic	1
79-322-00	Portable Charger, 36 Volt, 20 AMP, Transistorized	1
79-333-00	Portable Charger, 36 Volt, 30 AMP, Transistorized	1
79-337-00	Built-In Charger, 36 Volt, 30 AMP, Transistorized	1
74-005-00	Charge Indicator, 36 Volt	1
79-337-55	Cabinet, Console for Built-In Charger 79-337-00	1

SECTION J8
PAGE 5

SERVICE AND ADJUSTMENTS
BATTERY CHARGER

INTRODUCTION

This section describes the operation, trouble-shooting and repair of the CHRISTIE Series A and T Battery Chargers. They are designed for safe and efficient daily charging of batteries. Chargers may be furnished as a portable cabinet or of a type built-into the vehicle.

SPECIFICATIONS

MODEL Portable	MODEL Built-In	A-C Volts	A-C Amps	Batt Amp Hrs*	D-C Volts	D-C Amps
	"A" SERIES					
2420A	2420A-C/2420A-SS/2420AB	115	5	130/170	24	20
3620A	3620A-C/3620AB	115	9	130/170	36	20
	2410A	115	2.5	90	24	10
	"T" SERIES					
2420T	2420T-C	115	5	130/220	24	20
2430T	2430T-C/2430TB	115	7	170/250	24	30
3620T/T3620T	T3620TG/T3620T-C T3620TB	115	9	130/220	36	20
3630T/T3630T	T3630TG/T3630T-C T3630TB	115	10	170/250	36	30
4820T		115	10	130/220	48	20

*Higher capacity batteries may be charged if longer than 12 hours recharge time is available.

CHARGING CHARACTERISTICS

Series A - This charger uses a constant potential method of recharging. This means the charger output voltage is held relatively constant through the charge cycle. Since the rate of chage is a function of the difference between charger output voltage and battery voltage, the charger output current is reduced by the increased voltage of the battery as it recharges. On a discharged battery the charger sould start charging at near its rated output and as the battery recharges the charge rate will be reduced until it reaches a final charge rate of approximately 2 to 3 amps on a fully charged battery. The charging time is controlled by a timer which terminates the charge at the end of a preset time. Recommended minimum charging times are shown on the CHARGING TIME CHART.

Series T - This charger also uses a constant potential method for recharging, however, it is equipped with a voltage sensing device that activates the timer when the battery reaches 80% of full charge. The timer then times out the balance of the charge, normally 4 hours. The time required for the battery to reach the 80% level will vary with the capacity and state of charge of the rated output and it will reduce its charging rate as the battery is recharged.

SECTION J8
PAGE 6

The final charge rate on a charged battery will be approximately 6 to 10 amperes depending on the rating of the charger. A shorter recharge time is achieved by using this method. Protection from overcharging is provided by the voltage sensing device.

INSTALLATION

Portable models may be set on any suitable working surface so that there is access to the control panel. There should be at least six inches of clearance on each side and two inches on the top to allow free flow of air for cooling. Do not expose the charger to rain or other adverse weather conditions. There must be a separately fused, three-wire, single phase, 115 volt, 15 ampere power receptacle within reach of the A-C input cord of the charger. If the A-C input voltage at your location varies from the nominal 115 volts, it will be necessary to adjust the charger for proper operation. A Low-Med-High switch on the charger is designed to make the necessary adjustment convenient. This switch is located on the front panel of all portable models and on the built-in models with separate control console.

The "Med." setting is designed for those locations where the voltage is between 113 and 120 volts. If your input voltage is between 121 and 128 volts, set the switch in the "Low" position. This will reduce the output voltage to compensate for the high input voltage. If the input voltage at your location is between 105 and 112 volts, set the switch in the "High" position. This will raise the output voltage to compensate for low input voltage. For greater accuracy, the input voltage should be measured during the time of day when the battery chargers are normally in use.

If the output current as shown on the meter exceeds the rated output of the charger, set the switch to the next lowest position to avoid damage. Once set, it should not be necessary to change the switch position as long as the charger is used at the same location.

OPERATING INSTRUCTIONS

1. Verify that the output fuses are fully tightened.
2. Connect the D-C plug to the battery receptacle. Portable chargers are furnished with a polarized D-C plug that mates with a corresponding polarized receptacle in the vehicle to prevent improper connections to the battery. Built-in models are permanently connected to the batteries.
3. Connect the A-C plug to a suitable, grounded receptacle.
   A Series - Determine the minimum charging time (see CHARGING TIME CHART). Turn the charger on by setting the timer knob to the desired charging time.
   T Series - Turn the charger on by setting the timer knob to "START" position (4 hours). The voltage sensing unit will automatically start the timer when the battery reaches 80% of full charge.
4. Verify that the output meter indicates a charging current. If there is no charging current, see TROUBLE SHOOTING section. Never let the charger charge higher than its rated output. If the charger is charging too high, check the batteries to be sure thate are no defective cells or short circuits. See the instructions, concerning tap switch setting under INSTALLATION section.

SECTION J8
PAGE 7

5. The timer control will turn off the charger (positive turn off feature) at the completion of the charge.
6. Disconnect the battery from the charger. On built-in models, disconnect the A-C cord.
7. Using a hydrometer, verify that the battery is properly charged.

CHARGING TIME CHART (A SERIES)

The following chart provides useful information for determining the minimum charging time needed to restore a battery to a full charge condiction. In addition to normal charging, the cells of the batteries should be equalized twice each month. This is done by charging the batteries an additional seven (7) hours after a normal charge cycle. The current indications of the ammeter must be low during cell equalization.

Specific Gravity Reading	Condition of Battery	Hours Needed to Charge
1100	fully discharged	12
1125	10% charged	10
1150	20% charged	8
1175	30% charged	7
1200	60% charged	4
1225	75% charged	2
1250	95% charged	1/2
1260	fully charged	0

TROUBLE SHOOTING & REPAIR INSTRUCTIONS

LOW OR NO CHARGING CURRENT

1. Using a voltmeter, verify that the battery being charged has no open or dead cells. Check jumper cables between batteries for tight and clean connections, and also verify that the battery is not already fully charged.
2. Check the output fuses of the charger to make sure they are not loose or "blown".
3. Verify that the A-C receptacle has power by plugging in an electrical appliance. Using a voltmeter, check A-C input voltage at the receptacle. Taps are provided inside back panel of charger to adjust for input voltages from 105 to 125. Verify that charger is connected for correct voltage.
4. Turn the charger ON and verify that the transformer hums. If no hum is heard, proceed with step 4.1. If a hum exists, go to step 5.
   - 4.1 Remove A-C plug from power source.
   - 4.2 Remove the cabinet cover (1) to gain access to the interior of the charger.
   - 4.3 With the timer switch OFF, check for continuity between the two primary input leads of the transformer. If no continuity is found, replace the transformer. If continuity is found, proceed as follows:
   - 4.4 With the timer switch ON, check for continuity across the switch. On "T" Series chargers there are two switches - check both. If switch is open with the timer ON, replace the timer assembly.
   - 4.5 If all of the above checks indicate continuity, but the transformer does not hum, check for loose or broken leads between the A-C plug, the timer assembly and the tap switch or terminal board.

SECTION J8
PAGE 8

5. If the transformer hums, proceed as follows:
   5.1 Remove A-C plug from power source.
   5.2 Check the two output fuses to insure they are good. Inspect the fuse holder for damage or a blackened appearance. (If the fuse holder is blackened, it indicates oxidation and should be replaced).
   5.3 Remove both output fuses. Check for continuity from the output side of both fuse holders to the positive side of the D-C plug, connecting continuity indicator first in one direction and continuity in the other. Continuity in both directions or no continuity in either direction indicates a bad diode. Replace the diode connected to that fuse holder.
   5.4 Check for continuity between the input side of one fuse holder and the input side of the other. If no continuity exists, the transformer secondary is open. Replace transformer.
   5.5 Check for continuity across the two terminals of the meter. If no continuity exists, the meter is open. Replace meter.
   5.6 If all indications to this point are normal, test the entire D-C output circuitry for continuity by progressing from the positive D-C output prong to the negative D-C output prong in incremental test sections, checking each connection for open circuits and poor conditions.

A-C LINE FUSES BLOW

6. With unit unplugged and timer turned ON, check for continuity between each input prong of the A-C plug and the ground prong. If continuity is found between either input prong and ground, a short circuit exists and must be found and removed. If all indications are open and the A-C fuses are of sufficient rating for the charger, a shorted transformer is the most probable cause of this problem. Replace transormer.

OUTPUT FUSES BLOW

7. Verify that the circuit under charge is not shorted by disconnecting the charger and operating it disconnected.
8. If output fuses continue to blow, test the charger as per steps 5.1 through 5.6.

TIMER DOES NOT TURN UNIT OFF

9. Unplug charger. Check continuity of timer motor. If open, replace timer. If not, check timer switch contacts. If timer assembly is not defective, adjust Voltage Sensing Unit as per instructions in next paragraph ("T" Series only).

VOLTAGE SENSING UNIT ADJUSTMENT PROCEDURE ("T" Series)

NOTE: A D-C voltmeter with the appropriate voltage range is required to perform the following adjustment.

10. The unit is assembled on a small panel inside the charger cabinet (see item 23, exploded diagram). Each unit has been carefully adjusted at the factory.

SECTION J8
PAGE 9

To actuate at the proper voltage; however, if it is desired to change the actuation voltage point, the following procedure should be followed:

10.1 Connect the charger to a battery which is known to be fully charged.

10.2 Observing polarity, connect the voltmeter across the battery terminals.

10.3 Turn the charger ON. The voltage across the battery, as indicated by the voltmeter, will rise slowly. When the proper voltage (dependent upon the number of cells) is reached, the small relay in the voltage sensing unit will actuate. This can be detected since it generates an audible click.
NOTE: The Voltage Sensing Unit should be set for 2.37 volts per cell. On a 24 volt system, the Voltage Sensing Unit should actuate at 28.4 volts. On a 36 volt system, the unit should actuate at 42.7 volts.

10.4 Turn the adjustment shaft on the voltage Sensing Unit clockwise to raise the actuating voltage and counter-clockwise to lower the actuating voltage.

10.5 Turn the charger ON and OFF, as necessary, to raise and lower battery voltage, while repeating steps 10.3 and 10.4 until the desired actuation point is achieved.

IMPORTANT FACTS ON BATTERIES AND CHARGERS

To determine whether or not a battery is properly charged, a measuring device known as a hydrometer is used. A hydrometer measures the specific gravity of a liquid and a battery hydrometer is graducated to measure the specific gravity of battery electrolyte. The electrolyte in your battery becomes heavier as it is charged, therefore, a higher specific gravity reading indicates a higher charge condition of your battery. The specific gravity reading will range from 1100 for a completely discharged battery to 1260 for a fully charged battery. No amount of overcharging will raise the specific gravity above 1260 on the electric vehicle type of battery. Both overcharging and undercharging can cause a premature failure of a battery. Overcharging destroys the positive plates. Consistent undercharging causes a buckling of the plates.

Do not discard a good battery as being defective because its specific gravity does not show an increase immediately upon applying a charge. Many good batteries require a charging period as long as three hours before they show any increase in the specific gravity. Do not charge a battery if the electrolyte temperature could rise above 120 degrees F. This could damage both battery and charger. As a rule of thumb, the electrolyte temperature during normal charging will rise about 25 degrees above the temperature in the charging area.

Failure to keep the battery electrolyte to the proper level will result in a crumbling (abnormal sulfation) of the plates and cause failure of the battery. Distilled water must be added to the battery regularly to make up for the loss due to evaporation. Prior to charging, the electrolyte level should cover the battery plates. Fill the battery to the proper level only after it has been fully charged.

SECTION J8
PAGE 10

WARNING - HAZARD OF EXPLOSIVE GAS MIXTURE

Batteries being charged or discharged will give off hydrogen gas. If this gas is concentrated it can cause an explosion. Concentrations of gas may remain for several hours if ventilation is not provided. Do Not have any fire in the vicinity and do not tamper with circuits that might cause sparking while charging or discharging batteries.

INSPECTION OF BATTERIES AND ASSOCIATED CIRCUITS

An inspection of batteries and associated circuits is required to assure that the batteries are being properly charged. For this inspection we recommend the use of a hydrometer and a continuity tester.

1. Verify that all connections within the unit to be charged are clean and right.

2. Check each battery for loose terminal posts.

3. Test for continuity between all battery terminals and the charging receptacle.

4. Verify that the top of each battery is free of moisture, grease and acid film, which may cause terminal corrosion and current leakage.

5. After the battery has been recharged, test each individual cell in each battery with the hydrometer to verify that all specific gravity readings are within 10 points of each other.

6. Using the hydrometer, pull out acid from a cell and then vigorously expel the acid back into the cell to cause a violent stirring action. Immediately draw out another sample of acid and visually inspect it to see if it contains a brownish sediment (indicates positive plates are deteriorated).

7. When testing battery condition with hydrometer, always return electrolyte solution to the same cell from which it was removed. DO NOT MIX electrolyte from one cell to another.

SECTION J8
PAGE 11

CIRCUIT DIAGRAMS

SERIES "A" & "T" CHARGERS

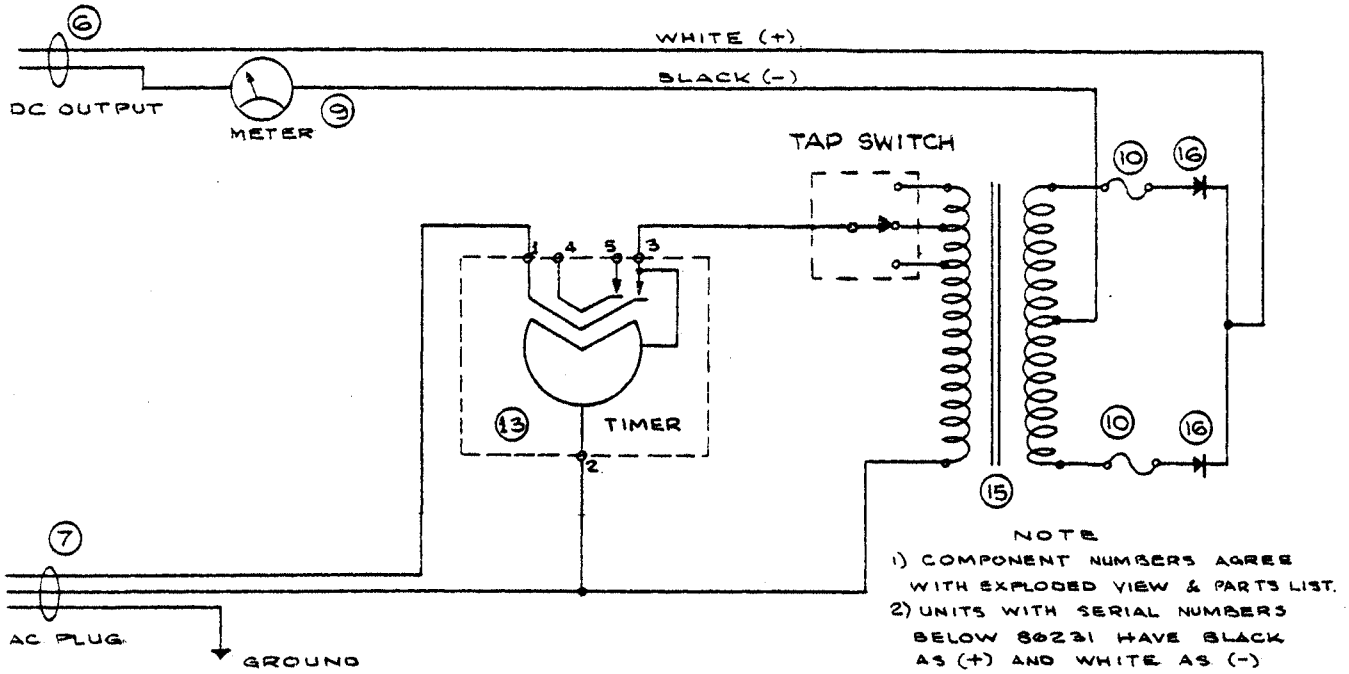

CHRISTIE SERIES "A" BATTERY CHARGERS

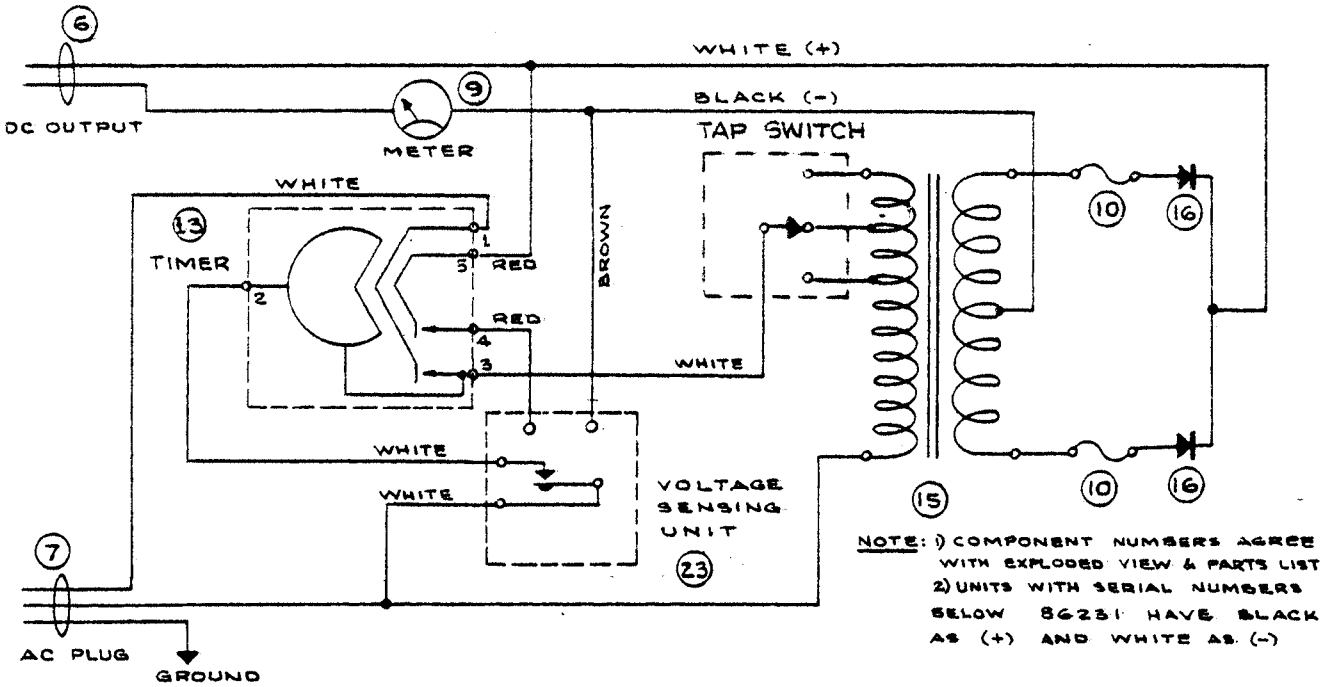

CHRISTIE SERIES "T" BATTERY CHARGERS

SECTION J8
PAGE 12

PART IDENTIFICATION

SERIES "A" & "T" CHARGERS

EXPLODED DIAGRAM

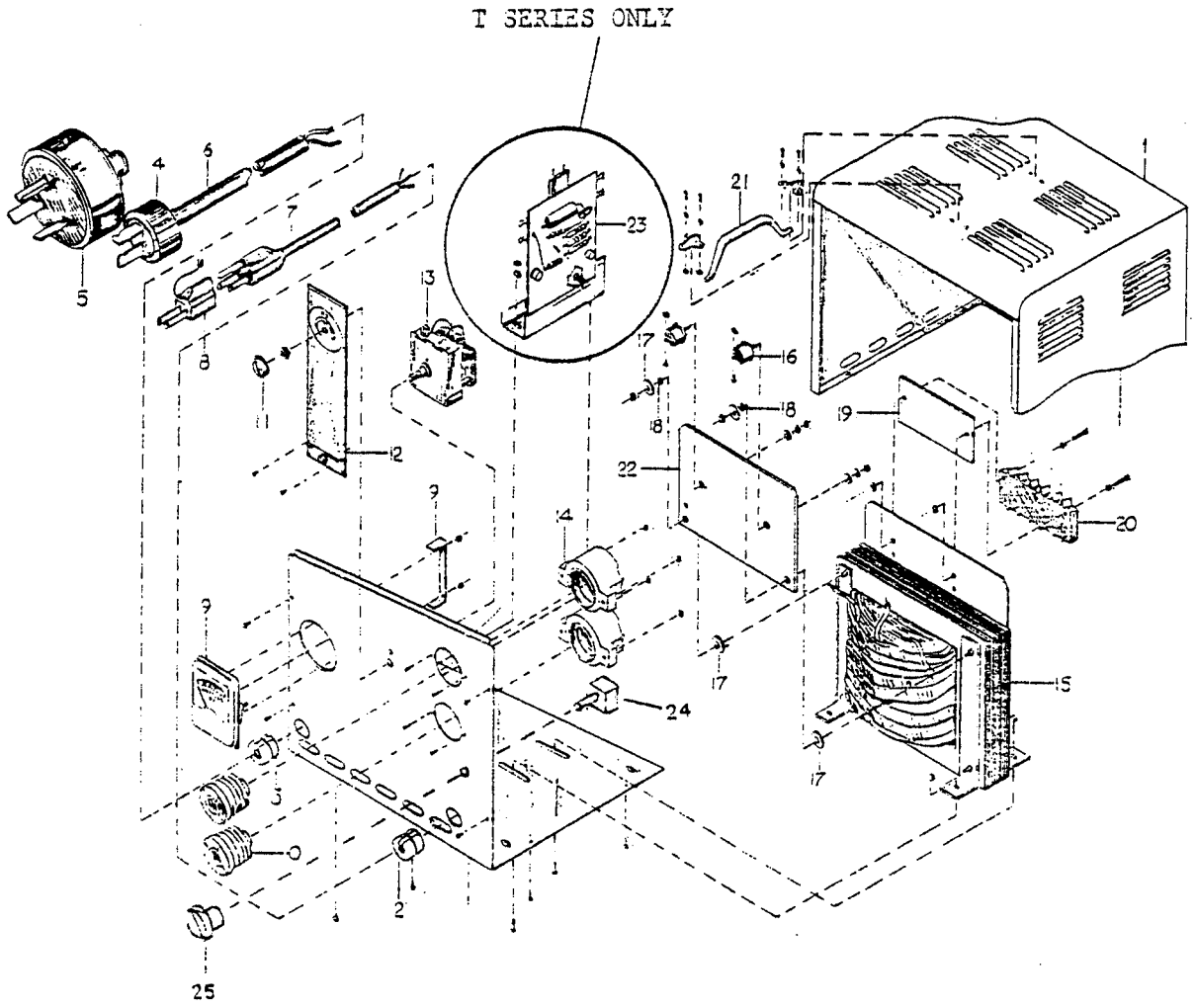

Portable Cabinet Shown.

I.D. Numbers of Internal Components are Identical for Portable and Built In Charger.

SECTION J8
PAGE 13

PARTS LIST

ITEM	TAYLOR-DUNN PART NO.
1 Cabinet	
2 Bushing (A-C)	79-530-00
3 Bushing (D-C)	79-531-00
4 D-C Plug (2 Prongs)	76-001-00
5 D-C Plug (3 Prongs)	76-002-00
6 Output Cord (no plug)	79-560-00
Output Cord w/molded plug	
7 A-C Cord and Plug (portable model)	79-570-00
Molded A-C Assembly (built-in model)	79-575-00
Recessed Male Plug (built-in model)	75-251-00
8 NOT AVAILABLE	
9 Ammeter (0-30 amp)	79-851-00
10 Fuse (30 amp),Screw type	79-819-00
11 Control Knob,Plastic	79-803-00
12 NOT AVAILABLE	
13 Timer Assembly, 12 Hr. ("T" Series)	79-800-00
Timer Assembly, 24 Hr. ("A" Series)	79-801-00
14 Fuse Holder, 30 AMP, Screw Type	79-830-00
15 Transformer, 24V/20A ("T" Series)	79-630-00
Transformer, 24V/20A ("A" Series)	79-606-00
Transformer, 24V/30A ("T" Series)	79-607-00
Transformer, 36V/20A ("T" Series)	79-613-00
Transformer, 36V/20A ("A" Series)	79-612-00
Transformer, 36V/30A ("T" Series)	79-614-00
Transformer, 48V/20A ("T" Series)	79-620-00
16 Diode, 24/36V, with Mounting Hardware	79-720-00
Diode, 48V, with Mounting Hardware	79-724-00
17 Washer, Insulated, 3/4" OD	97-170-00
18 Washer, Insulated, 3/8" OD	97-171-00
19 NOT AVAILABLE	
20 Terminal Strip	79-860-00
21 Handle Assembly	79-509-00
22 NOT AVAILABLE	
23 Voltage Sensing Unit, 24V ("T" Series)	79-810-00
Voltage Sensing Unit, 36V ("T" Series)	79-811-00½
Voltage Sensing Unit, 48V ("T" Series)	79-812-00
24 Tap Switch (Low-Med-High)	79-895-00
25 Knob, (Low-Med-High)	79-896-00

When ordering parts, please specify both serial number and model of charger.

SECTION J9
PAGE 1

MAINTENANCE PROCEDURES

BODY AND TRIM

Your vehicle has been finished with several coats of durable baked on enamel.

It will require the same care as you would give your automobile. The chrome trim is also resistant to corrosion and will require an occasional cleaning.

It is recommended that your vehicle be washed with a mild soap and warm water. For long life a good automotive type of wax will extend the life of the finish and maintain lasting beauty.

For identification of Body and Trim Parts available for repair and replacement, refer to the following pages in this section.

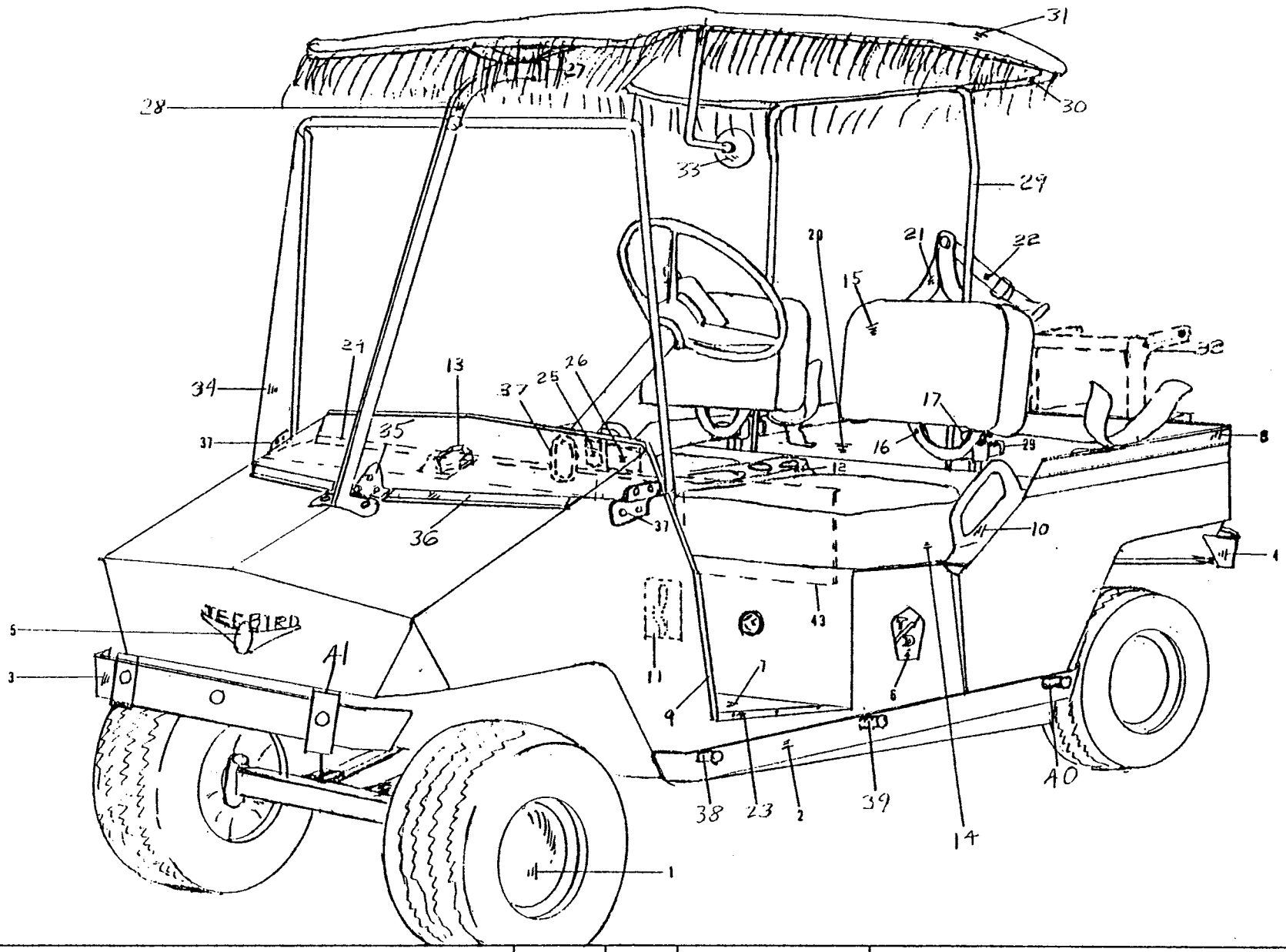

SECTION J9
PAGE 2

SECTION J9
PAGE 2

DRAWN BY	FIGURE 11 SECTION J9	BODY & TRIM PARTS - MODEL TEE BIRD	TAYLOR DUNN MFG. CO. 2114 West Ball Rd. Anaheim Calif.
DATE 1-80			

SECTION J9
PAGE 3

BODY & TRIM PARTS
REFER TO FIGURE 11

FIG. I.D. NO.	T-D PART NO.	DESCRIPTION	QTY.
11-1	92-001-00	Cover, Wheel, Chrome	4
11-2A	91-920-10	Bumper, Side, Left or Right, Zinc Plated	2
11-2B	91-920-20	Bumper, Side, Left or Right, Chrome Plated	2
11-3A	91-920-51	Bumper, Front, Zinc Plated	1
11-3B	91-916-51	Bumper, Front, Chrome Plated	1
11-4A	91-920-52	Bumper, Rear, Cross Bag Rack Only, Zinc Plated	1
11-4B	91-916-52	Bumper, Rear, Cross Bag Rack Only, Chrome Plated	1
11-4C	91-921-52	Bumper, Rear Center, Stand-Up, Zinc Plated	1
11-4D	91-918-52	Bumper, Rear Center, Stand-Up, Chrome Plated	1
11-4E	91-921-53	Bumper, Rear Upper, Left or Right, Stand-Up, Zinc Plated	2
11-4F	91-918-53	Bumper, Rear Upper, Left or Right, Stand-Up, Chrome Plated	2
11-5	94-203-00	Tee Bird Emblem	1
11-6	94-201-00	Taylor-Dunn Emblem	1
11-7	98-017-60	Mat, Rubber Floor, Not Used w/Disc Brakes	1
11-7	98-017-70	Mat, Rubber Floor, Used only w/Disc Brakes	1
11-8A	94-025-00	Trim, Aluminum, Rear Deck, Cross Bag Rack	1
11-8B	94-036-00	Trim, Aluminum, Rear Deck, Stand-up Bag Rack	1
11-9	94-035-51	Trim, Black Plastic, 78" Long w/Trim Allowance	1
11-10A	90-312-10	Arm Rest, Dipped Black, Left Side	1
11-10B	90-313-10	Arm Rest, Dipped Black, Right Side	1
11-11	94-307-00	Plate, Forward/Reverse Switch	1
11-12	91-402-00	Tray, Accessory, Black Plastic, Tapered	1
11-13	91-508-00	Bracket, Ash Tray	1
11-13	91-405-00	Ash-Tray, Glass	1
11-14	90-139-00	Set, Seat Cushion, Consisting of 2 Each	1
11-14	90-154-99	Cushion, Seat, Individual, Specify Color Combination	2
11-15	90-138-00	Backrest, Seat, Individual, Specify Color Combination	2
11-16A	90-103-98	Support, Adjustable Back Rest Cushion, Left Side	1
11-16B	90-103-97	Support, Adjustable Back Rest Cushion, Right Side	1
11-17	95-901-00	Knob, Plastic, for Locking Back Rest	2
11-20	90-456-10	Deck-Board, Two Piece w/Cradle Bag Rack, Belts & Clips	1
11-20	90-456-00	Deck-Board, without 2 Piece Cradle Rack, 23-7/8 x 42-7/8	1
11-20	90-455-10	Deck-Board, for Stand-Up Bag Rack, with clips and Bumpers	1
11-21	91-521-00	Rack, Single Bag, Two Piece, Not Including Belts or Buckle.	2
11-22A	91-542-00	Belt with Tip & Eyelet, Cradle Rack Only	2

SECTION J9
PAGE 4

BODY & TRIM PARTS
REFER TO FIGURE 11

FIG. I.D. NO.	T-D PART NO.	DESCRIPTION	QTY. REQ.
11-22B	91-542-00	Belt with Tip & Eyelet, Craddle Rack Only	2
11-22C	91-536-00	Buckle, Cradle Rack Only	1
11-22D	96-602-00	Clamp for Attachment of Buckle to Rack	2
11-22E	88-067-13	Screw, Oval Head for Attaching Rack to Board 1/4 NC	2
11-23	94-039-00	Strip, Aluminum, Trim for Rubber Floor Mat, 14" Long with 3 Holes	2
11-24	94-026-00	Strip, Aluminum Trim for Cowl Shelf	1
11-25	94-308-00	Decal, Directional Control	1
11-26	94-302-00	Decal, Warning	1
11-27	95-911-00	Cap, Plastic, 1" Square	2
11-28A	91-034-10	Support, Front Top, Zinc Plated	1
11-28B	91-034-20	Support, Front Top, Chrome Plated	1
11-29A	91-036-10	Support, Rear Top, Zinc Plated	1
11-29B	91-036-20	Support, Rear Top, Chrome Plated	1
11-28/29	96-119-00	"L" Bolt, for Rear Top Support	4
11-30	91-031-10	Frame, Top, Tubular, Zinc Plated	1
11-31A	91-120-00	Top, Surrey with Fringe	1
11-31B	91-150-00	Top, Fiberglass	1
11-31B	91-150-61	Kit, Hardware w/Instructions for Installing 91-150-00 Fiberglass Top	1
11-31B	98-451-00	Weatherstrip for Fiberglass Top	4 Ft.
11-32	91-524-10	Bag-Holder, Stand-Up, Black	1
11-32	98-019-00	Mat, for Stand-up Bag Rack	1
11-32	94-037-00	Strip, Aluminum Trim, for Stand-up Bag Rack Mat, Bag Area	1
11-33	92-203-00	Mirror, Rear View	1
11-34A	90-825-00	Windshield, Rigid Plastic	1
11-34B	90-824-00	Windshield, Flexible Plastic with Fasteners	1
11-34B	85-221-00	Spring, Extension for Flexible Windshield 11/16 OD x 3	2
11-35	90-825-61	Kit, Mounting Bracket & Hardware for Rigid Windshield Including Instructions	1
11-36	98-314-00	Channel, Rubber Lip Seal for Rigid Windshields	2
11-37	98-613-00	Grommet, Rubber, Steering Column	1
11-38	16-207-00	Spacer, 1/2 Long, Side Bumper, Front	2
11-39	16-206-00	Spacer, 1-1/16 Long, Side Bumper, Center and Stand-Up Rear Upper Bumper	6

SECTION J9
PAGE 5

BODY & TRIM PARTS - FASTENERS

USED WITH I.D. NO.	T-D PART NO.	DESCRIPTION	QTY. REQ.
11-2,4,6	88-102-17	3/8 N.C. x 2-1/4 Carriage Bolt	3,3,3
11-3,4	88-102-11	3/8 N.C. x 1 Carriage Bolt	3,3
11-2,3,4	88-109-87	3/8 N.C. Fastite Nut	3,6,3
11-13	88-557-91	1/8 Push-On Nut	6
11-51	88-807-01	#4 x 3/16 Drive Screw	2
11-50,60	88-737-08	3/16 Dia. x 5/8 Aluminum Pop Rivet	7,7
11	88-088-62	5/16 Lock Washer	
11-16,23	88-727-06	5/32 Dia. x 1/2 Aluminum Pop Rivet	4,26
11-7	88-837-11	#14 X 1 Pan Head Sheet Metal Screw	23
11-36	88-100-13	3/8 N.C. X 1-1/4 Hex Head Screw	2
11-36	88-108-62	3/8 Lock Washer	2
11-37A,37B	88-080-14	5/16 N.C. x 1-1/2 Hex Head Bolt	6,4
11-37A,37B	88-089-81	5/16 N.C. Lock Nut	6,4
11-42	88-069-87	1/4 N.C. Fastite Nut	1
11-42	88-069-83	1/4 N.C. Acorn Nut	1
11-42	88-065-06	1/4 N.C. x 1/2 Truss Head Screw	1
11-42	88-068-61	1/4 S.A.E. Washer	1
11-42	88-068-62	1/4 Lock Washer	1
11-20,26	88-065-09	1/4 x 3/4 N.C. Truss Head Machine Screw	8,4
11-26	88-065-11	1/4 x 1 N.C. Truss Head Machine Screw	6
11-26	88-065-13	1/4 x 1-1/4 N.C. Truss Head Machine Screw	2
11-26	88-068-60	1/4 S.A.E. Washer	16
11-17	88-065-08	1/4 x 5/8 N.C. Truss Head Machine Screw	16

BODY & TRIM PARTS - NOT ILLUSTRATED

50-226-00	Battery Rod - 15-1/4"	2
50-235-00	Battery Rod - 21-3/4"	4
94-304-00	Switch, Nameplate	1
98-613-00	Grommet, Rubber (2" I.D.) Steering Column	1
94-026-00	Aluminum Trim Strip Cowl Shelf	1
92-201-00	Mirror 4 x 8	1
92-202-00	Mirror Bracket Assy.	1
74-005-00	Charger Indicator, 12 Volt	1

N O T I C E O F C H A N G E

WE WANT OUR MANUALS TO BE USEFUL AND CORRECT. IF YOU DISCOVER AN ERROR OR WISH TO SUGGEST CHANGES, PLEASE FILL OUT THIS SHEET AND MAIL IT TO TAYLOR-DUNN.

MANUAL NO. _____ SERIAL NO. _____ **DATE:** _____

* AN ERROR(S) EXISTS ON THE FOLLOWING SECTION(S) AND PAGE(S) NO.

SECTION _____ PAGE NO. _____ LINE OR ITEM _____

_____

_____

_____

* **EXAMPLE:** Section 13, Page 5, Item 5.
PART NO. 41-350-55 KIT, CYLINDER REPAIR SHOULD BE PART NO. 41-350-66.

MAIL TO: TAYLOR-DUNN
ATTN: ENGINEERING
2114 W. BALL ROAD
ANAHEIM, CA 92804

==========

N O T I C E O F C H A N G E

WE WANT OUR MANUALS TO BE USEFUL AND CORRECT. IF YOU DISCOVER AN ERROR OR WISH TO SUGGEST CHANGES, PLEASE FILL OUT THIS SHEET AND MAIL IT TO TAYLOR-DUNN.

MANUAL NO. _____ SERIAL NO. _____ **DATE:** _____

* AN ERROR(S) EXISTS ON THE FOLLOWING SECTION(S) AND PAGE(S) NO.

SECTION _____ PAGE NO. _____ LINE OR ITEM _____

_____

_____

_____

* **EXAMPLE:** Section 13, Page 5, Item 5.
PART NO. 41-350-55 KIT, CYLINDER REPAIR SHOULD BE PART NO. 41-350-66.

MAIL TO: TAYLOR-DUNN
ATTN: ENGINEERING
2114 W. BALL ROAD
ANAHEIM, CA 92804