TAYLOR-DUNN®

The Best Way
To Go
About Your
Business

Models Inlcuded:
C0-426-48ACFE

FedEx®

AC

MANUAL MC-425-06

Operation, Troubleshooting and Replacement Parts Manual

Published: 9/15/2008
Revision: E, 9/23/2011

Serial number Range:
178317 through [current production]

TAYLOR-DUNN SERVICE CENTER

For more information about this and other Taylor-Dunn® manuals, please write Taylor-Dunn®:

Taylor-Dunn® Mfg.
2114 W. Ball Road
Anaheim, CA 92804
(Attn: Technical Writer)

Contents

Table of Contents

B2-48 With Dump Bed Option

B2-10 Ambulance

B2-48 with Steel Cab, Foldaway
4-Passenger Seat and Stake Sides

P2-50 30,000 Pound Tow Tractor

ET 3000

ET1-50 Full Size Truck

Introduction

Contents

ABOUT THIS MANUAL

The purchase of this vehicle shows a belief in high quality products manufactured in the USA. Taylor-Dunn®, a leading manufacturer of electric burden and personnel carriers since 1949, wants to be sure this vehicle provides years of reliable service. Please continue to read this manual and enjoy this high quality Taylor-Dunn® vehicle.

This manual is to serve as a guide for the service, repair, and operation of Taylor-Dunn® vehicles and is not intended as a training guide. Taylor-Dunn® has made every effort to include as much information as possible about the operation and maintenance of this vehicle.

Included in this manual are:

- Vehicle Description
- Safety Rules and Guidelines
- Operational Information
- Operator Responsibilities
- Owner Responsibilities
- Control Operation and Location Information
- Maintenance and Troubleshooting Information
- Standard Parts List

Before servicing, operating, training or performing maintenance on this or any other Taylor-Dunn® vehicle, read the appropriate Taylor-Dunn® manual.

Each Taylor-Dunn® manual references the applicable models and serial numbers on the front cover.

Please, be aware of all cautions, warnings, instructions, and notes contained in this manual.

WHO SHOULD READ THIS MANUAL

This manual is intended for use by anyone who is going to operate, own, perform maintenance on, service, or order parts for this Taylor-Dunn® vehicle. Each person should be familiar with the parts of this manual that apply to their use of this vehicle.

RESPONSIBILITIES

Of the Owner...

The owner of this or any Taylor-Dunn® vehicle is responsible for the overall maintenance and repairs of the vehicle, as well as the training of operators. Owners should keep a record of conducted training and maintenance performed on the vehicle. (OSHA Regulation, 29 CFR 1910.178 Powered Industrial Truck Operator Training).

Of the Operator...

The operator is responsible for the safe operation of the vehicle, preoperational and operational checks on the vehicle, and the reporting of any problems to service and repair personnel.

Of the Service Personnel...

The service personnel are responsible for the service and maintenance of the vehicle. At no time should a service person allow any untrained personnel to service or repair this or any Taylor-Dunn® vehicle. For the purposes of training, a qualified service person may oversee the repairs or services being made to a vehicle by an individual in training. At no time should an untrained individual be allowed to service or repair a vehicle without supervision. This manual is not a training guide.

Of the Passengers ...

The passengers are responsible to remain fully seated, keeping their hands, arms, and legs inside the vehicle at all times. Each passenger should be fully aware of the vehicle's operation. All forms of recklessness are to be avoided. Do not engage in horseplay.

HOW TO USE THIS MANUAL

This manual is organized into five main sections:

INTRODUCTION

This section describes how to use this service manual and how to identify your vehicle.

Safety Rules and Operating Instructions

This section outlines the safety and operational issues, location and operation of controls, and the operational checks that are to be performed on this vehicle. It also includes various subjects that should be included in the operator and service training program.

Maintenance Service and Repair

This section gives specific information on the servicing of the vehicle and a schedule for maintenance checks.

Electrical and Charger Troubleshooting

This section identifies the troubleshooting procedures for testing the electrical system and battery charger.

Illustrated Parts

This section provides an illustrated view of various assemblies. The illustrations are accompanied by tables identifying the parts.

Conventions

Symbols and/or words that are used to define warnings, cautions, instructions, or notes found throughout this manual:

⚠WARNING

or,

⚠WARNING

A shaded box with the word "Warning" on its left denotes a warning. A warning alerts the reader of a hazard that may result in injury to themselves or others. Be sure to follow any instructions contained within a warning and exercise extreme care while performing the task.

⚠CAUTION

The symbol at the left and the bold text contained within a box denotes a "Caution" and is used to inform the reader that property damage may occur. Be sure to exercise special care and follow any instructions contained with in a caution.

NOTE: Alerts the reader to additional information about a subject.

HOW TO IDENTIFY YOUR VEHICLE

This manual applies to vehicles with the same model and serial numbers listed on the front cover.

These vehicles are designed for driving on smooth surfaces in and around facilities such as industrial plants, nurseries, institutions, motels, mobile home parks, and resorts. They are not to be driven on public highways.

⚠WARNING

This vehicle is not designed to be driven on public roads or highways. It is available in maximum designed speed of 10 mph. Do not exceed the maximum designed speed. Exceeding the maximum designed speed may result in steering difficulty, motor damage, and/or loss of control. Do not exceed locally imposed speed limits. Do not tow this vehicle at more than 5 mph.

The locations of the model and serial numbers are illustrated below:

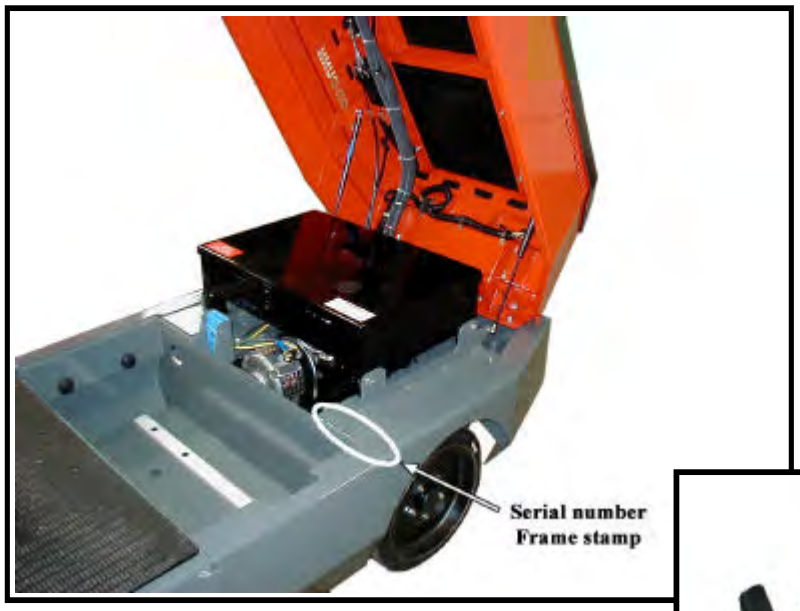

TAKING DELIVERY OF YOUR VEHICLE

Inspect the vehicle immediately after delivery. Use the following guidelines to help identify any obvious problems:

- Examine the contents of all packages and accessories that may have come in separate packages with the vehicle.
- Make sure everything listed on the packing slip is there.
- Check that all wire connections, battery cables, and other electrical connections are secure.
- Check battery cells to be sure they are filled.
- Check the tire pressure, tightness of lug nuts, and for any signs of damage.

Check the operation of each of the following controls or components:

- Accelerator
- Brake
- Hand Parking Brake (optional)
- ON-OFF Switch
- Forward/Reverse Switch
- Reverse Beeper
- Front and rear lights
- Steering Wheel
- Horn

What To Do If a Problem is Found

If there is a problem or damage as a result of shipping, note the damage or problem on the bill of lading and file a claim with the freight carrier. The claim must be filed within 48 hours of receiving the vehicle and its accessories. Also, notify your Taylor-Dunn® dealer of the claim.

If there is a problem with the operation of the vehicle, DO NOT OPERATE THE VEHICLE. Immediately contact your local Taylor-Dunn® distributor and report the problem. The report must be made within 24 hours of receiving the vehicle and its accessories.

The only personnel authorized to repair, modify, or adjust any part of this or any Taylor-Dunn® vehicle is a factory authorized service technician.

⚠WARNING

The only personnel authorized to repair, modify, or adjust any part of this or any Taylor-Dunn® vehicle is a factory authorized service technician. Repairs made by unauthorized personnel may result in damage to the vehicles systems which could lead to an unsafe condition resulting in severe bodily injury and/or property damage. Unauthorized repairs may also void the vehicles warranty.

B2-48 With Stake Side Dump Bed Option

SC1-00 Stock Chaser

E4-55 Sit Down Tow Tractor

C4-25 Sit Down Tow Tractor

Safety Rules and Operating Instructions

TABLE OF CONTENTS

SPECIFICATIONS TOW TRACTOR

ITEM	SPECIFICATION
Occupancy	Driver only, no passengers
Dimensions	2388 L x 1016 W x 1422 H Millimeters 94 L x 40 W x 56 H Inches Length includes hitch
Turning Radius	1879 Millimeters (74 inches)
Dry Weight (Without Battery)	885 kg (1,950 lbs)
Battery Compartment Dimensions	813 L x 470 W x 610 H Millimeters 32 L x 18.5 W x 24 H inches
Battery Specifications:	
Battery Type	Exide Model 24-E85D-9 (504174D)
Weight	617 kg (1361 lbs)
Voltage	48
Connector	SB 350 Blue
Lead Length	762 millimeters (30 inches)
Position	A
Cover	No

Charger Specifications:	**Single Phase-60Hz**	**3-Phase-60Hz**
Charger Type	Exide D1-24-600	Exide D3G-24-680
AC Input Volts	208 / 240 / 480	208 / 240 / 480
AC Input Amps	45 / 40 / 20	31 / 27 / 14
	Single Phase-50Hz	**3-Phase-50Hz**
Charger Type	EnerSys EF1-24-600D	EnerSys EF3-24-600D
AC Input Volts	220 / 380 / 440	220 / 380 / 440
AC Input Amps	38 / 22 / 19	19.1/ 11.1/ 9.6

Towing Capacity (draw bar pull)	136 kg (300 lb) Normal 907 kg (2000 lb) Ultimate
Electrical System	Solid State Speed Control, 500 Amp
Transmission	Helical Gear, Oil Bath, Automotive Type Hypoid Differential
Motor, AC	12.7 kW (17 Horse Power) for 5 min
Maximum Speed (unloaded)	16 kph (10 mph)
Brakes	Four Wheel Hydraulic Disc, Automaticaly Applied Park Brake
Steering	Automotive Steering 24:1
Tires	15.5 x 6 x 10 Solid Extra Cushion Finger Bar Tread
Instrumentation	Combination Display (Battery Status Indicator, Hour Meter, System Status Monitor), ON-OFF Switch, Horn Switch, Forward-Off-Reverse Switch
Light Accessories	LED Headlight, LED Tail Light, LED Brake Light

This vehicle conforms to requirements for Type E vehicles as described in O.S.H.A. Standard Section 1910.178 (Powered Industrial Trucks) and with all applicable portions of the American National Standard for Operator Controlled Industrial Tow Tractors (ANSI B56.9).

SAFETY RULES AND GUIDELINES

It is the responsibility of the owner of this vehicle to assure that the operator understands the various controls and operating characteristics of this vehicle while also obeying he following safety rules and guidelines (reference American National Standards Institute Operator Controlled Industrial Tow Tractors ANSI B56.9).

These vehicles are designed for driving on smooth surfaces in and around facilities such as industrial plants, nurseries, institutions, motels, mobile home parks, and resorts. They are not to be driven on public highways.

⚠WARNING

This vehicle is not designed to be driven on public roads or highways. It is available in maximum designed speed of 10 mph. Do not exceed the maximum designed speed. Exceeding the maximum designed speed may result in steering difficulty, motor damage, and/ or loss of control. Do not exceed locally imposed speed limits. Do not tow this vehicle at more than 5 mph.

Read and follow all of the guidlines listed below. Failure to follow these guidelines may result in severe bodily injury and/or property damage.

- Do not drive this vehicle unless you are a qualified and trained operator.
- Keep all body parts (head, arms', legs') inside the vehicle while it is moving.
- Drive slowly when making a turn especially if the ground is wet or slippery.
- Drive slowly when driving on an incline.
- This vehicle may overturn easily if turned sharply while driven at high speeds, or on an incline.
- Drive only on level surfaces or on surfaces having an incline of no more than 10% (5.6 degrees).
- Do not drive over loose objects, holes, or bumps.
- Observe all traffic regulations and speed limits (see speed warning above).
- Keep to the right under normal conditions.
- Maintain a safe distance from all objects.
- Keep the vehicle under control at all times.
- Yield right of way to pedestrians, ambulances, fire trucks, or other vehicles in emergencies.
- Do not overtake another vehicle at intersections, blind spots, or other dangerous locations.
- Keep a clear view ahead at all times.

DRIVER TRAINING PROGRAM

According to ANSI B56.9, the owner of this vehicle shall conduct an Operator Training program for all those who will be operating this vehicle. The training program shall not be condensed for those claiming to have previous vehicle operation experience. Successful completion of the Operator Training program shall be required for all personnel who operate this vehicle.

The Operator Training program shall include the following:

- Operation of this vehicle under circumstances normally associated with your particular environment.
- Emphasis on the safety of cargo and personnel.
- All safety rules contained within this manual.
- Proper operation of all vehicle controls.
- A vehicle operation and driving test.

Driver Qualifications

Only those who have successfully completed the Operator Training program are authorized to drive this vehicle. Operators must possess the visual, auditory, physical, and mental ability to safely operate this vehicle as specified in the American National Standards Institute ANSI B56.9.

The following are minimum requirements necessary to qualify as an operator of this vehicle:

- Demonstrate a working knowledge of each control.
- Understand all safety rules and guidelines as presented in this manual.
- Know how to properly load and unload cargo.
- Know how to properly park this vehicle.
- Recognize an improperly maintained vehicle.
- Demonstrate ability to handle this vehicle in all conditions.

⚠WARNING **Before working on a vehicle:**

1. **Make sure the On-Off switch is in the "OFF" position.**
2. **Place the forward-reverse switch in the center "OFF" position.**
3. **Place blocks under the front wheels to prevent vehicle movement.**
4. **Unplug the main battery connector.**

VEHICLE CONTROLS

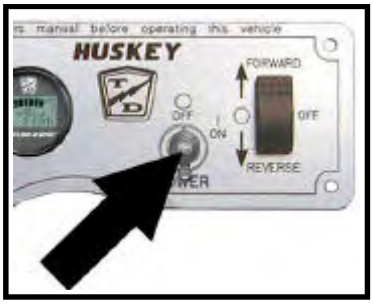

ON-OFF Switch

A switch, located on the right center side of the instrument panel, turns on the vehicle. Rotate the switch clockwise to turn the vehicle power on, counterclockwise to turn the vehicle power off.

The switch should be in the “OFF” position whenever the operator leaves the vehicle.

NOTE: There is a programmed time delay controlling the main contactor power. The main contactor will not drop out until the time delay has expired.

⚠WARNING

Do not get off of the seat or turn the start switch “OFF” while the vehicle is in motion. Getting off of the seat or turning the switch “OFF” will activate the system interlock, rapidly slowing the vehicle and applying the park brake. The abrupt slowing of the vehicle may result in severe bodily injury.

Forward-Off-Reverse Switch

The forward-Off-reverse switch, located on the right side of the instrument panel, determines the direction of travel of the vehicle. Push the top of the switch to engage the forward direction. Push the bottom of the switch to engage the reverse direction.

DO NOT SWITCH from forward to reverse or vice-versa while the vehicle is in motion. Make sure the vehicle is completely stopped before shifting.

The forward-off-reverse switch should be in the center “OFF” position, with key-switch off and the park brake set whenever the operator leaves the vehicle.

Horn Switch

The horn switch is located on the floorboard to the left of the steering column. The switch is foot operated. Depress the switch to sound the horn, release it to turn it off.

Headlights/Tail Lights

The headlights and tail lights are controlled by the vehicle ON-OFF switch. The lights will be ON when the switch is ON and OFF when the switch is OFF

NOTE: There is a programmed time delay controlling the main contactor power and lighting system. The main contactor and lights will not drop out until the time delay has expired.

Reverse or Motion Alarm

The reverse alarm is located in the electronics compartment mounted in the speed control panel enclosure. The reverse alarm is activated when the start switch is in the “ON” position and the Forward-Off-Reverse switch is in the reverse position. The alarm makes a repeated audible sound.

Steering

The steering wheel and steering system are similar to an automobile. To turn right, turn the steering wheel clockwise. To turn left, turn the steering wheel counter-clockwise.

Accelerator Pedal

The accelerator pedal is located to the right of the brake pedal. It controls the speed of the vehicle and operates similar to the accelerator pedal in an automobile. Depress the pedal to increase speed and release the pedal to decrease speed.

Foot Brake Pedal

The foot brake pedal, is located to the right of the steering column, it is for operation with the right foot only. It works similar to the brake in an automobile. Applying pressure to the brake pedal slows the vehicle according to the amount of pressure applied. Relieving pressure from the pedal releases the braking action.

Emergency Stop Switch (optional)

The emergancy stop switch will immediately and abruptly stop the vehicle.

The Emergency Stop Switch will stop the vehicle but will still allow some functions to work such as the parking brake bypass switch.

⚠WARNING

Do not depress the Emergency Disconnect Switch while the vehicle is in motion unless the vehicle must be stopped in an emergency. Depressing the switch will immediately apply the park brake, stopping the vehicle. The abrupt stopping of the vehicle may result in severe bodily injury and premature failure of the park brake.

Seat Interlock Switch

A switch located under the driver's seat disables the power to the vehicle when the driver leaves the seat. The driver must be seated for the vehicle to operate.

Whenever the driver leaves the vehicle, the driver should turn the start switch off, place the forward-off-reverse switch in the center “OFF” position.

⚠WARNING

The seat interlock switch is only one part of the vehicle safety system. The interlock switch should not be relied upon as the only safety feature used to disable or disengage this vehicle. Doing so could result in unexpected movement of the vehicle causing severe bodily injury and/ or property damage.

⚠WARNING

Do not get off of the seat or turn the start switch “OFF” while the vehicle is in motion. Getting off of the seat or turning the switch “OFF” will activate the system interlock, rapidly slowing the vehicle and applying the park brake. The abrupt slowing of the vehicle may result in severe bodily injury.

Combination Display

The gauge on the dash has many functions. The display will cycle through the functions while the vehicle is in operation. Some functions may not be displayed depending on the current situation of the vehicle.

Hour Meter

Battery Status

Speedometer

Battery Status Indicator-bar graph:

There are five LED's at the bottom of the gauge. Each LED represents an approximate state of charge as listed below:

#5 (far right) LED (green): When on represents 84% to 100% charge remaining.
#4 LED (green): When on represents 68%-84% charge remaining.
#3 LED (green): When on represents 52%-67% charge remaining.
#2 LED (yellow): When on represents 36%-52% charge remaining.
#1 LED (red): When on represents charge 20%-36% remaining. When flashing represents 0%-20% charge remaining.

If the #1 LED is flashing, the vehicle or battery should be immediately removed from service to be recharged. Discharging beyond 20% will damage the battery.

Battery Status Indicator-digital:

Displays total charge remaining in percent. The example to the right indicates that the vehicle has 100% charge remaining (fully charged).

Speedometer:

Indicates the vehicles current rate of travel in miles per hour.

Hour Meter:

Displays total time (whole hours) vehicle has been in operation. Time is accumulated only while the vehicle is moving. The example to the right indicates that the vehicle has been in operation for 2,114 hours.

System Fault Monitor:

The gauge has an alpha numeric display that monitors the system status. If the system detects a fault, an abbreviated fault message will be displayed. Refer to the table below for the abbreviated fault message and description.

Fault Code	Description	Note
CNTL TEMP	Speed controller overheated	3
LOW V	Low battery voltage	
HIGH V	High battery voltage	
CNTL FLT	Speed controller internal fault or wiring fault	1
MOTORTEMP	Motor overheated	3
MOTR FLT	Faulty motor or wiring	1
EB FAULT	Electric brake fault	1
SRO	Operator error	2
STALL	Motor stalled	4
SEAT OFF	Seat interlock switch open	
F/B OR	Foot brake switch closed (brake applied)	

1: Check position of brake bypass switch, refer repair to a qualified technician.

2: Switched used to operate vehicle may have been selected in the incorrect sequence. Refer to operator instructions in this section.

3: Wait for component to cool. Vehicle may be overloaded.

4: Vehicle overloaded, faulty motor, or possible locked up brakes or transmission. If vehicle is not overloaded, Refer repair to a qualified technician.

VEHICLE OPERATIONAL GUIDELINES

Safety Guidelines

- Only qualified and trained operators may drive this vehicle.
- Drive only on level surfaces or on surfaces having an incline of no more than 10% (5.6 degrees).
- Drive slowly when making a turn, especially if the ground is wet or when driving on an incline.
- This vehicle may overturn easily if turned sharply or when driven at high speeds.
- Observe all traffic regulations and speed limits.
- Keep all body parts (head, arms, legs) inside this vehicle while it is moving.
- Keep the vehicle under control at all times.
- Yield right of way to pedestrians, ambulances, fire trucks, or other vehicles in emergencies.
- Do not overtake another vehicle at intersections, blind spots, or other dangerous locations.
- Do not drive over loose objects, holes, or bumps.
- Yield right of way to pedestrians and emergencies vehicles.
- Stay in your driving lane under normal conditions, maintaining a safe distance from all objects.
- Keep a clear view ahead at all times.

Starting:

1. Make sure the forward-off-reverse witch is in the center “OFF” position.
2. Hold down the foot brake.
3. Turn the start switch to the “ON” position.
4. Wait 1-second then place the forward-off-reverse switch in the desired direction of travel.
5. Release the foot brake.
6. Slowly depress the accelerator pedal.

While driving:

- Slow down and sound the horn to warn pedestrians or when approaching a corner or other intersection.
- No reckless driving.
- Do not drive this vehicle on steep inclines or where prohibited.
- Immediately report any accidents or vehicle problems to a supervisor.

Loading and Unloading

- Do not carry more than the maximum number of passengers allowed for this vehicle.
- Do not exceed the cargo load capacity.
- Do not load cargo that can fall off.
- Be careful when handling cargo that is longer, wider, or higher than this vehicle, be sure to properly secure all loads.

Towing Loads:

- Do not exceed the DBP towing capacity of the tractor. See vehicle specifications and DBP definition.
- Do not exceed the load capacity of the trailer. Refer to documentation supplied with your trailer for information regarding load capacity of the trailer.
- Make sure all loads are securely tied down. Refer to documentation supplied with your trailer for information regarding attaching loads to the trailer.
- Do not back up when towing more than one trailer.
- Drive slowly when towing loads with a high center of gravity.
- When turning, be sure to allow for “corner cutting” of the trailer.
- Allow for longer stopping distances when towing heavy loads.
- Allow for longer stopping distances when driving down a grade.

⚠WARNING

Do not get off of the seat or turn the start switch “OFF” while the vehicle is in motion. Getting off of the seat or turning the switch “OFF” will activate the system interlock, rapidly slowing the vehicle and applying the park brake. The abrupt slowing of the vehicle may result in severe bodily injury.

Parking

Before leaving the vehicle:

- Set the forward-off-reverse switch to the ` "OFF" position.
- Turn the start switch to the "OFF" position.

In addition:

- If parking this vehicle on an incline, turn the wheels to the curb, or block the wheels.
- Do not block fire aisles, emergency equipment, stairways, or exits.

Draw Bar Pull (DBP), definition

DBP is a measure of pulling force required to move a load. The load may be a trailing load or a pushed load. It is normally expressed in pounds or Newtons.

The DBP of a tow tractor is the horizontal force exerted on a load at its coupler while towing or pushing a load. To measure the DBP, a scale would be connected in line with the tractor coupler and the load. The scale will directly read the DBP as the tractor tows the load.

Tow tractor DBP specifications, definition:

Normal DBP: Highest DBP that can be sustained for a given duty cycle.

Ultimate DBP: Also referred to a Maximum DBP. Highest DBP achieved while travailing at a minimum speed of approximately 0.5 mph (0.8 kph)for a minimum of 30 seconds. This specification is used in calculations for getting a load moving.

Notes:

Tow tractor DBP specifications are based on:

- Road surface consisting of level dry clean asphalt, brushed concrete or equivalent.
- Maximum battery weight installed per tow tractor battery specification.

Towing a load up any grade will significantly affect the DBP required.

Most paved roads and parking lots have a drainage grade to allow water to run off. When operating a tow tractor at or near its maximum capacity, this drainage grade will greatly affect DBP required to pull the load and may exceed the tractor specifications.

Towing

This vehicle is equipped with a standard automatic electric parking brake. The brake is automatically applied when the vehicle is stopped. There is a parking brake bypass switch located on the right side of the control box (see illustration). Place this switch in the UP position to tow the vehicle (see note below). This switch should be in the UP position only while towing the vehicle. the switch should be placed in the DOWN position immediately after the towing is completed. Leaving the switch in the UP position will discharge the battery.

To tow this vehicle, attach a tow strap to the front bumper tow-bar.

Use another driver to steer this vehicle while it is being towed. Be sure the driver uses the brakes when the towing vehicle slows or stops. Do not tow the vehicle faster than 5 m.p.h. or its maximum designed speed, whichever is lower.

If at all possible, this vehicle should be placed on a carrier, rather than towing.

NOTE: The automatic electric brake is powered by the vehicles battery. The brake may not disengage if the battery is severely discharged. A battery must be installed to tow the vehicle.

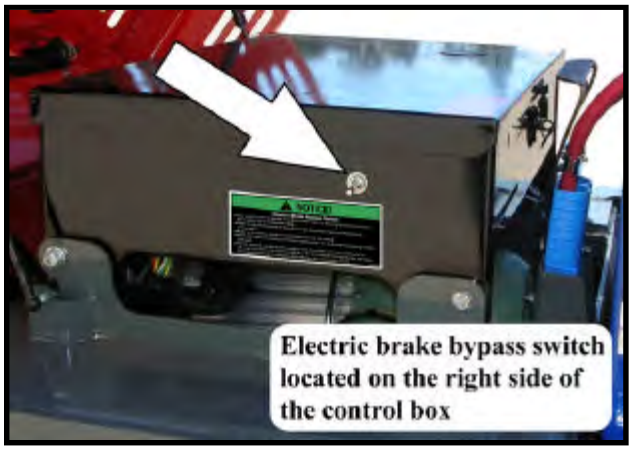

Adjustable Controller Parameters

A limited number of controller parameters can be adjusted by your dealer. A list of these adjustable parameters and their function is listed below along with their default factory settings.

Acceleration settings

Normal mode:

FwdAC LS: 2.1 Seconds
Time to accelerate to ~15% of full speed.

FwdAc HS: 2.9 Seconds
Time to accelerate to full speed.

RevAc LS: 5.0 Seconds
Time to accelerate to from **FwdAC LS** to full speed.

RevAc HS: 5.0 Seconds
Time to accelerate to full speed.

Tow Mode (optional):
Same function descriptions as Normal mode.

FwdAC LS: 2.1 Seconds
FwdAc HS: 2.9 Seconds
RevAc LS: 5.0 Seconds
RevAc HS: 5.0 Seconds

Decleration settings

Brake Multiplier: 50%
Brake regen multiplier is activated by the brake switch.

Normal Decl HS: 8.0 Seconds
Time to decelerate to 0 when above 20% of full speed.

Normal Decl LS: 8.0 Seconds
Time to decelerate when below 20% of full speed.

Tow Decl function descriptions below are same as normal mode above. Tow mode is optional.

Tow Decl HS: 7.0 Seconds
Tow Decl LS: 7.0 Seconds

Maintenance Meter Function

Service Timer: 0 Hours
Set to 0 (zero) disables function. Set to other than 0 will result in 'Service Due' cut speed when the set time expires.

⚠WARNING

Improper programming may cause unexpected operation of the vehicle and/or damage the electrical components. This could result in severe bodily injury and/or property damage

Speed Limits

Max: 6,250 RPM (motor)
Governed speed (see formula below)

Tow (optional): 62%
Percentage of Max speed when Tow Switch is ON.

Rev: 40%
Percentage of Max speed when in reverse.

Low Batt: 40%
Percentage of Max speed when low battery warning is ON.

Service Due: 25%
Percentage of Max speed when service is due. See maintenance Meter Function.

Battery Characteristics

Full Volts: 2.165 volts per cell
Battery must exceed this voltage to be considered fully charged.

Empty Volts: 1.730 volts per cell
Voltage of a fully discharged battery.

BDI Level for Low Batt Spd: 15%
Low battery warning is ON when battery is discharged below this level.

BDI Reset %: 80%
Battery must be discharged below this value before the BDI will be allowed to reset.

Reset Volts: 2.10 volts per cell
Battery voltage must be above this value to reset the BDI. Modified by the 'BDI Reset %' above).

Discharge Time: 60 Minutes
Estimated battery discharge rate.

Miscellaneous

SRO Min Speed: 3000 RPM
Motor must be below this RPM to change directions with the throttle pedal depressed.

Speed Calculation Formulas:

RPM = (20172 / T_d) * (MPH / 60) * R

RPM = (31837 / T_d) * (KPH / 60) * R

Where, **RPM** = motor RPM, **T_d** = Tire diameter (inches or cm), **MPH** = Miles Per Hour, KPH = Kilometers per hour, **R** = Rear axle ratio

CIRCUIT BREAKER PANEL

The circuit breaker panel is located under the access cover on the front cowl. In addition, there are main circuit breakers located in the electrical control box located behind the battery compartment.

Circuit Breaker Panel

Accessory output

Lights and reverse alarm

Brake lights and horn

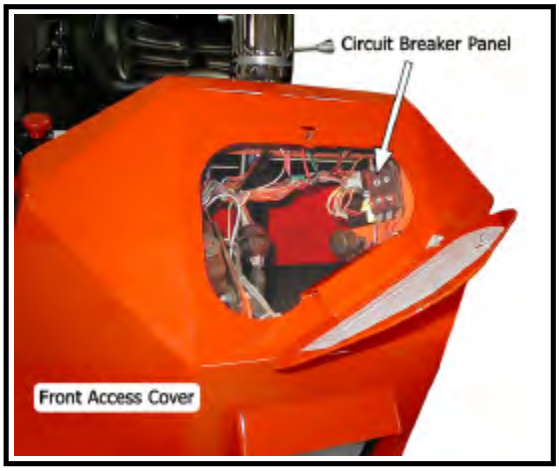

Electrical Control Box

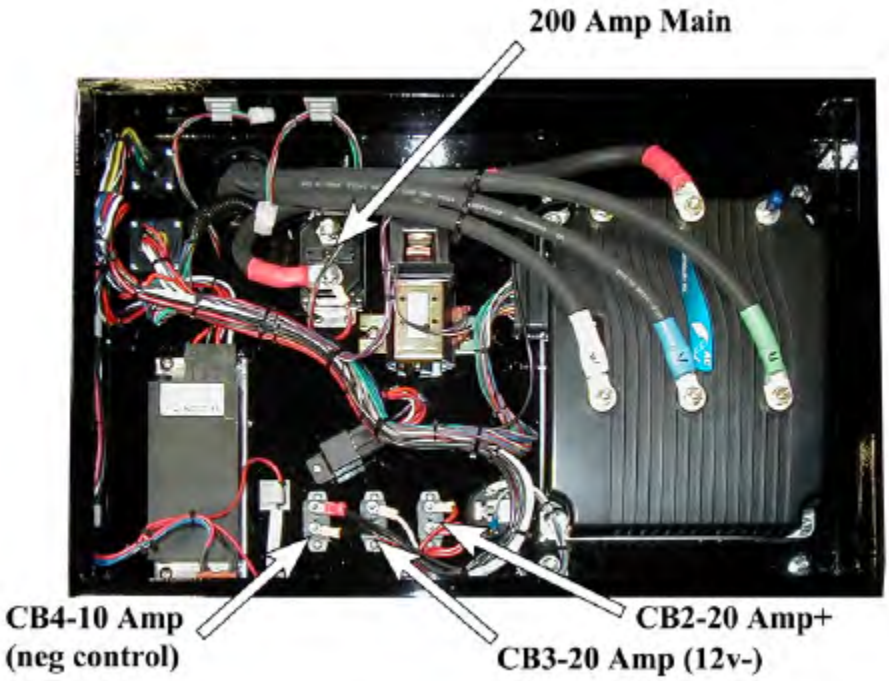

CHARGING YOUR VEHICLE

⚠WARNING

Explosive mixtures of Hydrogen gas are present within battery cells at all times. Do not work with or charge battery in an area where open flames (including gas furnace or water heater pilots), sparks, cigarettes, or any other sources of combustion are present. Always provide ample ventilation in rooms where batteries are being charged. Failure to do so may result in severe bodily injury and/or property damage.

⚠WARNING

Battery electrolyte is poisonous and dangerous. It contains sulfuric acid. Avoid contact with skin eyes or clothing. Wear rubber gloves and safety glasses while servicing batteries. DO NOT INGEST! This may result in severe bodily injury.

Operation of the Charger

Refer to the Charger Supplement at the end of this section..

New Battery Break in

A new battery requires a break in period of up to 40-cycles. The battery will not have full capacity during this break in period and may require longer charging times.

To obtain the maximum battery life:

Charge the battery only after a normal discharge as indicated on the Battery Status Indicator (BSI). Failure to follow this guideline could result in the battery entering an overcharge state, which will reduce the life of the battery. If you find it necessary to charge the battery before it is completely discharged we recommend waiting until it is discharged a minimum of 25% to reduce the possibility of overcharging. Refer to Vehicle Controls in this section for information on how to read the BSI.

Do not discharge the battery beyond a normal discharge as indicated on the BSI. Refer to Vehicle Controls in this section for information on how to read the BSI.

Check the battery electrolyte level once a week. Do not charge the battery if the battery electrolyte level is low. Charging when the electrolyte level is low will damage the battery and shorten the lifespan. Only authorized personnel should perform battery maintenance including maintaining the battery electrolyte level. Refer to ***Battery Service*** section for battery maintenance information.

Do not interrupt the charging cycle. When the charger is plugged in, allow it to turn off before disconnecting. Interrupting the charging cycle could lead to overcharging or discharging the battery too deep. Both circumstances will shorten the life of the battery.

STORING AND RETURNING TO SERVICE

Both storing your vehicle and returning it to service should only be performed by authorized personnel.

Storing Your Vehicle

- Clean the battery, then fill and charge before putting the vehicle in storage. Do not store batteries in a discharged condition.
- Lube all grease fittings.
- Clean, dry, and check all exposed electrical connections.
- Inflate tires to proper pressure (if applicable).
- For extended storage, the vehicle should be elevated so that the tires do not touch the ground.

If stored for a prolonged period, the battery should be charged as follows:

Storage Temperature (F)	Charging Interval (months)
Over 60	1
Between 40 and 60	2
Below 40	6

Returning To Service

- Check the battery state of charge and charge if required.
- Perform ALL maintenance checks in the periodic checklist.
- Remove any blocks from the vehicle and/or place the vehicle down on to the ground.
- Test drive before putting into normal service.

PERIODIC MAINTENANCE CHECKLIST

Taylor-Dunn
Preventative Maintenance Schedule for GT Drive with AC Motor

Date: _____ Model #: _____ Hour Meter: _____
Inspected By: _____ Serial #: _____
Serviced By: _____ Unit ID#: _____

Interval (hours)[1]	Inspected[2]	Service Required	Service Complete	Item Description
Operator Daily Checklist				Master cylinder fluid level
				Parking brake for secure hold
				Battery water level
				Tire inflation (pneumatic tires)
				Tire tread / damage
				All lights (head, tail, brake, warning, dash panel)
				Steering (hard steering, excessive play, unusual noises)
				Inspect brake and throttle pedal (play, binding, noise)
				Horn
				Motion alarm (if equipped)
				Fluid leaks (brakes, rear axle, battery, hydraulic system)
500				Adjust service and park brake systems
				Inspect all steering linkages and hardware
				Tighten steering shaft to steering gear coupler (if equipped)
				Lubricate the vehicle
				Wash batteries and clean terminals
				Inspect for fluid leaks
				Check all electrical interlocks for proper operation
				Inspect wheel bearings for play and noise
				Inspect front fork collar bearings for play and noise (3-wheel vehicle only)
				Inspect and tighten all hardware (first 500 hours only, then 1000 hours and every 1000 hours)
1000				Inspect and tighten all hardware
				Clean and repack front wheel bearings, replace grease seals
				Inspect and clean brake dust from electric motor brake
				Inspect all electrical connections for signs of overheating
				Tighten all electrical connections
				Inspect all wiring for cracks, fraying or wear
				Clean and lubricate motor coupler
				Inspect steering king pins for play
				Align front end
2000				Change rear axle oil
				Flush hydraulic brake system
				Inspect suspension bushings (spring, shock)
				Inspect suspension bumpers
				Replace brake pedal/treadle return spring
				Inspect frame for damage

Notes (1) and (2), Refer to "Maintenance Guidelines for Severe Duty" in the vehicles service manual

Form PM-0002 GT Drive / AC Motor, Revision B
08/25/2006

NOTE: A full page copy of the Periodic Maintenance Checklist is on the Vehicle Documentation CD under the [Misc] sub folder.

Daily Inspection:

Tire condition and pressure.

External frame damage (body).

Operation of all lights and warning alarms and/or horns.

Smooth and proper operation of all controls such as but not limited to:

- Accelerator pedal, Brake pedal, Steering, Parking Brake (automatic or hand operated), etc.
- Proper operation of all locking devises such as but not limited to:

  Tool box, Removable battery trays, Cargo box, Cab doors, etc.
- Proper operation of all interlocking switches such as but not limited to:

  Key switch, Seat interlock switch, Charger interlock switch, etc.
- Inspect for leaking fluids or grease.

MAINTENANCE GUIDELINES FOR SEVERE DUTY APPLICATIONS

1. This maintenance checklist is based on the average application. If the vehicle is operated under "severe conditions", service procedures should be conducted more frequently than specified. The frequency of service under severe conditions is determined by the use of the vehicle. The owner/operator must evaluate the operating environment to determine the increase in maintenance frequency.

In addition, the whole vehicle should be inspected monthly for signs of damage. The damage must be repaired immediately.

The following list is meant as a guide and is not all-inclusive of a "severe duty" application.

- Extreme temperature.
- Bumpy, dusty, or ill maintained roads.
- Excessively wet areas.
- Corrosive or contaminated areas.
- Frequent loading of vehicle at/near capacity.
- Use on multiple shifts.

2. Any deficiencies found during an inspection should corrected before the vehicle is returned to service.

⚠WARNING

Only properly trained and authorized technicians should perform maintenance or repairs to this vehicle. Repairs or maintenance by improperly trained or unauthorized personnel could cause improper operation of the vehicle or premature failure of components resulting in severe bodily injury and/or property damage.

Charger Supplements

CHARGER SUPPLEMENT - ENERSYS EXIDE D1-24-600

NOTE: The information contained in the following pages was obtained from the charger manufacturer
Contact the manufacturer for questions or more information.

Refer to manufacturers web site for contact information: www.enersysmp.com/

YUASA, INC.

Installation and Operating Instructions for
The Single Phase Solid State Charger

YUASA-EXIDE D1/SD1 SINGLE PHASE CHARGER

SAVE THESE INSTRUCTIONS!

LOOK FOR THIS SYMBOL TO POINT OUT SAFETY PRECAUTIONS. IT MEANS: *BECOME ALERT—YOUR SAFETY IS INVOLVED.* IF YOU DO NOT FOLLOW THESE SAFETY INSTRUCTIONS, INJURY OR PROPERTY DAMAGE CAN OCCUR.

1. IMPORTANT OPERATING AND SAFETY INSTRUCTIONS
INSTRUCTIONS IMPORTANTES CONCERNANT LA SÉCURITÉ.

(a) Before using the battery charger, read all the instructions and caution markings on the battery charger, the battery, and all the products using the battery.

(b) Do not touch uninsulated parts of the DC output connector or the battery terminals, as there is a possibility of electrical shock. *Risque de chocks électriques. Ne pas toucher les parties non isolées du connecteur de sorti ou les bornes non isolées de l'accumulateur.*

(c) Batteries produce hydrogen gas while operating, which can explode if ignited. Never smoke, use an open flame, or create sparks near the battery. Ventilate the area well when the battery is charging in an enclosed place.

(d) Lead-acid batteries contain sulfuric acid, which may cause burns. Do not get in eyes, on skin, or clothing. If contact with the eyes occurs, flush immediately with clean water for 15 minutes and obtain medical attention.

(e) Connect or disconnect the battery plug only when the charger output is off to prevent arcing or burning.

(f) Only qualified personnel should program or service this equipment.

(g) De-energize all AC and DC power connections before servicing this unit. If injury does occur, apply standard treatment for electrical shock and, if necessary, consult with a physician.

(h) The charger is not for outdoor use. Do not expose the charger to rain or snow. *Ne pas exposer à la pluie.*

(i) This charger is factory set to charge lead-acid batteries. It may be programmed for wet or sealed batteries by a qualified YUASA service representative. *Utiliser pour charger uniquement les accumulateurs du type lead-acid. D'autres types d'accumulateurs pourraient éclater et causer des blessures ou domages.*

(j) Do not operate the charger if it has received a sharp blow, been dropped, or otherwise damaged. Take it to a qualified service center.

(k) Do not disassemble the charger. Have the charger examined by a YUASA service representative, or a local qualified service center. Incorrect reassembly of the charger may result in an explosion, electrical shock, or fire.

2. INTRODUCTION

The YUASA-EXIDE D1/SD1 single phase battery charger is a convection cooled, solid state, SCR regulated charger designed to make battery charging simple. The type of charger, D1 or SD, is dependent upon the control module setup used in the charger. The charger can be factory set to charge wet or sealed batteries and also may be configured by a YUASA technician.

The charger has an "I-E-I" profile which is high rate constant current (start region), constant voltage (plateau region), and low rate constant current (finish region). Constant start and finish current rates are found in Tables 1 and 2. The plateau region is defined by two voltage points; 80% point (knee 1) where the start region changes into the plateau region, and the finish point (knee 2) where the plateau region changes into the finish region. The two points are factor set at 2.38 volts per cell for the 80% point and 2.42 volts per cell for the finish point for wet D1 settings. The knee 1 value for SD1 sealed is 2.37 volts per cell, and knee 2 value for SD1 sealed is 2.40 volts per cell. If values other than these are required, contact your YUASA service representative.

The charger has an equalize feature used to equalize batteries. An equalize cycle is periodically used to lengthen the charge time on batteries to increase the gassing and the mixture of the chemicals in a battery. Press the green EQUALIZE button to change a normal charge cycle into an equalize charge cycle. A blinking equality light indicates the present cycle or next charge cycle will be an equalized cycle. Contact your YUASA service representative for information on how often your batteries should be equalized.

3. RECEIVING CHARGER

Unpack the charger and examine it for possible in-transit damage. If any damage is found, report it as a claim to the carrier.

4. LOCATION AND INSTALLATION OF CHARGER

Proper installation of the charger is important to achieve good charger performance and to prevent damage to the charger and batteries. The charger should be located in a clean, cool, dry, and well ventilated area. To permit free air flow for convection cooling, allow four inches (4") minimum between the charger and any wall, six inches (6") from other equipment, and never store anything beneath the charger.

⚠WARNING: DO NOT PLACE THE CHARGER ON OR NEAR FLAMMABLE MATERIALS. POSITION THE CHARGER ON A FOUNDATION OF STONE, BRICK, CONCRETE, OR GROUNDED METAL.

5. AC ELECTRICAL SUPPLY

The charger must be connected to a single-phase power source. The AC power source input frequency for most units is 60 ±3% hertz. Some units may be operated at both 50 ±3% and 60 ±3% hertz. Check the charger label or contact your YUASA service representative for proper AC power source. The AC input voltage (±10%) is dependent on the charger model as there are two types: 208/240/480 Vac or 120/208/240 Vac. The AC input wire size, dependent on the charger model and the AC input voltage, can be obtained from Tables 1 and 2. Table 1 is for 208/240/480 Vac models and Table 2 is for 120/208/240 Vac models. AC input lines must be installed by a qualified electrical contractor.

5.1 AC Fuse Mounting

From Table 1 or 2 locate the proper type and rating AC fuse size to insert for fuses F1 and F2 (cartridge type fuses). Fuses with an ampere rating of 30 amps or less are smaller and may require the usage of the fuse reducers supplied with the charger. Insert the fuses into the fuse mounted located on the inner panel.

Note: All input fuses are time delay, 600-volt, at the amp rating specified.

5.2 Configuration of Jumpers

Locate the AC tap strip found inside the charger on the inner panel. Figures 1 and 2 illustrate the correct way to configure the AC jumpers based on the AC voltage range. Figure 1 is for 208/240/480 Vac models and Figure 2 is for 120/208/240 Vac models. Use the instructions on the inner panel of the charger to configure the AC jumpers. Connect the jumpers as shown in the figure and torque the screws to 18-inch pounds for proper connection.

⚠WARNING: IMPROPER JUMPER CONNECTION MAY CAUSE SEVERE DAMAGE TO THE CHARGER AND BATTERY.

⚠WARNING: WHEN CHANGING THE AC VOLTAGE JUMPERS, BE SURE TO CHANGE THE RED WIRE AS SHOWN BELOW.

TABLE 1

			208 VAC INPUT			240 VAC INPUT			480 VAC INPUT		
D1 Model	DC Start Current	DC Finish Current (Wet)	Fuse Size (FRS)	AC Wire Size (AWG)	Input Current	Fuse Size (FRS)	AC Wire Size (AWG)	Input Current	Fuse Size (FRS)	AC Wire Size (AWG)	Input Current
6-450B	72	20	15	12	10.0	12	12	9.0	6	12	4.5
6-550B	88	25	15	12	12.0	15	12	11.0	8	12	5.5
6-680B	109	31	20	10	14.5	20	12	13.0	10	12	6.5
12-380B	61	17	25	10	16.0	20	10	14.0	10	12	7.0
12-550B	88	25	30	8	22.0	25	10	19.0	15	12	9.5
12-680B	109	31	35	8	27.0	30	10	22.0	15	12	12.0
12-750B	120	34	40	6	30.0	35	8	26.0	20	10	13.0
12-850B	136	38	45	6	33.0	40	6	29.0	20	10	14.0
18-600B	96	27	50	6	35.0	40	6	31.0	20	10	15.0
18-800B	128	36	60	6	45.0	60	6	38.0	30	10	19.0
24-600B	96	27	60	6	45.0	60	6	40.0	30	10	20.0

TABLE 2

			120 VAC INPUT			208 VAC INPUT			240 VAC INPUT		
D1 Model	DC Start Current	DC Finish Current (Wet)	Fuse Size (FRS)	AC Wire Size (AWG)	Input Current	Fuse Size (FRS)	AC Wire Size (AWG)	Input Current	Fuse Size (FRS)	AC Wire Size (AWG)	Input Current
6-450A	72	20	20	12	16.0	12	12	9.0	10	12	8.0
6-550A	88	25	25	12	18.5	15	12	11.0	12	12	9.5
12-380A	61	17	35	10	25.0	20	10	15.0	20	12	13.0

FIGURE 1

208 VAC JUMPER SETTING

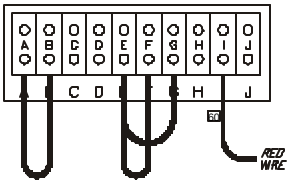

240 VAC JUMPER SETTING

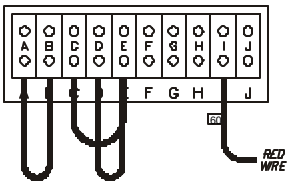

480 VAC JUMPER SETTING

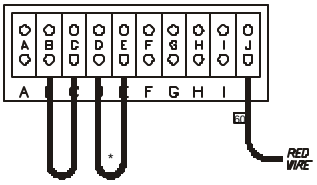

* PUT EXTRA JUMPER IN PARALLEL

FIGURE 2

120 VAC JUMPER SETTING

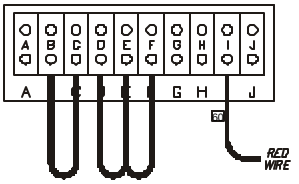

208 VAC JUMPER SETTING

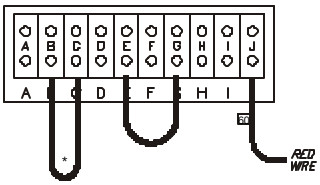

240 VAC JUMPER SETTING

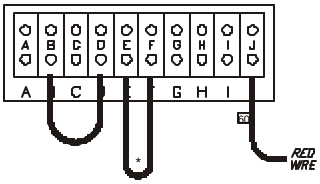

* PUT EXTRA JUMPER IN PARALLEL

5.3 AC VOLTAGE CONNECTIONS

To connect the input AC voltage, route the AC conduit through the desired knockout hole. Route the AC wiring to terminal lugs L1 and L2 located above the AC fuses. **For proper connection, torque the screws to 35-inch pounds.**

⚠WARNING: IMPROPERLY CONNEC-TED AC VOLTAGE CONDUCTORS CAN CAUSE AN ELECTRICAL FIRE.

Connect the AC ground to the terminal lug located to the left of the AC fuses.

⚠WARNING: DO NOT OPERATE THE CHARGER WITHOUT PROPER GROUNDING. IMPROPER GROUNDING CAN RESULT IN THE RISK OF AN ELECTRIC SHOCK.

6. DC OUTPUT

The DC charging cable has a commonly used battery plug or receptacle. The polarity of the charger plug must be the same as the battery connector. The BLACK DC cable must be connected to the battery negative (-), and the RED DC cable must be connected to the battery positive (+). The charger will not operate in a reversed polarity condition. The DC output fuse (F3) is a fast-acting fuse used to protect the silicon controlled rectifiers (SCRs). USE ONLY IDENTICAL REPLACEMENT FUSES OBTAINABLE FROM YOUR YUASA SERVICE REPRESENTATIVE.

The charger should NOT be used to charge cell sizes greater than the maximum cell size on the nameplate. If the battery's AH rating is larger than the AH rating specified on the charger's nameplate, contact your YUASA service representative. Your service representative may be able to reconfigure the charger to the larger AH rating.

7. D1/SD1 OPERATION

⚠CAUTION: MAKE SURE THE BATTERY PACK IS A RECHARGEABLE DEEP-CYCLE BATTERY SYSTEM WITH THE PROPERLY RATED VOLTAGE FOR THIS CHARGING SYSTEM.

⚠DANGER: TO PREVENT ELEC-TRICAL SHOCK, DO NOT TOUCH UNINSULATED PARTS OF THE CHARGER DC OUTPUT CONNECTOR, BATTERY CONNECTOR, OR BATTERY TERMINALS. MAKE SURE ALL ELECTRICAL CONNECTORS ARE IN GOOD WORKING CONDITION. DO NOT USE CONNECTORS THAT ARE CRACKED, CORRODED OR DO NOT MAKE ADEQUATE ELECTRICAL CONTACT. USE OF A DAMAGED OR DEFECTIVE CONNECTOR MAY RESULT IN A RISK OF OVERHEATING OR ELECTRIC SHOCK.

⚠WARNING: CHARGER IS NOT TO BE USED WHILE THE EQUIPMENT IS OPERATING.

⚠ATTENTION: Ne pas utilizer le charger pendant que l'equipment est en marche.

⚠WARNING: LEAD-ACID BATTERIES GENERATE GASES WHICH CAN BE EXPLOSIVE. TO PREVENT ARCING OR BURNING NEAR BATTERIES, DO NOT DISCONNECT DC CHARGING CORD FROM BATTERIES WHEN THE CHARGER IS OPERATING. IF THE CHARGE CYCLE MUST BE INTERRUPTED, PRESS THE STOP/TEST BUTTON TO TERMINATE THE CHARGE CYCLE BEFORE DISCONNECTING THE DC OUTPUT CORD FROM THE BATTERIES. KEEP SPARKS, FLAME, AND SMOKING MATERIALS AWAY FROM BATTERIES.

⚠WARNING: ALWAYS SHIELD EYES WHEN WORKING NEAR BATTERIES. DO NOT PUT WRENCHES OR OTHER METAL OBJECTS ACROSS BATTERY TERMINAL OR BATTERY TOP. ARCING OR EXPLOSION OF THE BATTERY CAN RESULT!

⚠CAUTION: TO AVOID DAMAGE TO THE CHARGER CORD AND BATTERY CONNECTOR, DISCONNECT BY GRASPING THE PLUG HANDLE OR BODY AND PULLING IT STRAIGHT OUT OF THE BATTERY CONNECTOR. DO NOT PULL ON THE CHARGER CORD. DO NOT TWIST, ROCK OR PULL THE PLUG SIDEWAYS.

⚠WARNING: DO NOT LEAVE THE DC OUTPUT CONNECTOR PLUGGED IN WHILE UNATTENDED FOR MORE THAN TWO (2) DAYS. SEVERE OVER-CHARGING AND DAMAGE TO THE BATTERIES MAY RESULT IF THE CHARGER DOES NOT TURN OFF.

7.1 USER INTERFACE

The D1 (see Figure 3) contains a four digit display, 7 LEDs for indicators, and 5 push buttons for operating the charger. Programmable display and charger operating options are also features available on the D1.

Figure 3

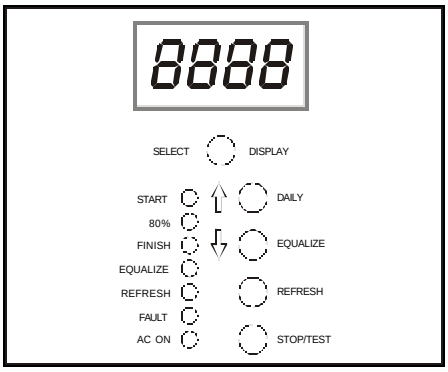

7.1.1 FRONT PANEL

To interact with the user, the D1 control module uses 5 push buttons and 7 LEDs (Light Emitting Diodes). Tables 3 and 4 describe the push button and the LED functions respectively.

Table 3

Push Button	Description
Select/Display	Selects what will be seen on the display. Also used to change charger parameters and save changes in program mode.
Daily	Starts or restarts a Daily charge cycle. It can convert an Equalize charge cycle to a Daily charge cycle if the 3-hour Equalize mode has not yet begun. It also is used to increase the display value in program mode.
Equalize	Starts or restarts an Equalize charge cycle. It can convert a Daily charge cycle to an Equalize charge cycle. It also is used to decrease the display when in program mode.
Refresh	Starts a Refresh charge, or adds a Refresh charge to a completed Daily or Equalize charge cycle.
Stop/Test	Interrupts a charge in progress. If there is no DC voltage present, it tests the LEDs and the display by lighting then for as long as the push button is held down. Used to exit program mode.

Table 4

LEDs	Description
Start	Blinks when DC voltage is present. Lights and remains on when a charge cycle begins.
80%	Lights and remains on after the gassing voltage point begins.
Finish	Lights and remains on when Finish current mode begins.
Equalize	Blinks when the current cycle is an Equalize charge cycle. Lights steady when the 3 hour Equalize mode begins.
Refresh	Blinks when Refresh is active. Lights steady when the refresh charge cycle begins.
Fault	Lights when a fault occurs. The display will show the fault code. Fault codes are described in Table 6.
AC on	Lights steady when AC power is applied to the charger.

7.1.2 DISPLAY MODE

A four digit display interacts with the user to show information such as: cycle counter, equalize counter, current, voltage, amphours and time. With no battery connected to the charger, the display will alternate between "C=XX" and “E=XX" which are cycle counter and equalize Counter (see programming options for detailed information).

While the charger is outputting current or reads "OFF", the display can be set to show: charger current, volts per cell, AH returned, and time on charge.

To see specific values on the display, press the DISPLAY push button. The display will show "dX", where X is a number between 1 and 5. Table 5 describes what each number corresponds to and the format type which is used to distinguish between different types of data. Each time the DISPLAY push button is pressed, X increments. Releasing the push button will cause the data corresponding to the X to display. After the DISPLAY push button is released wait approximately 20 seconds for the display to start cycling through the data at about three second intervals.

The display mode is factory set to "d1", so when the charger is outputting current, the display will show charger current only. Change the display number if more information is desired.

Table 5

Display Number	What is Displayed	Format
1	Charger current in amps.	XXX.X
2	Volts per cell (v/c)	X.XXX
3	Current and v/c	
4	AH returned, v/c, and current	XXXX
5	Time on charge, v/c, current, AH.	X.X.X.X

7.1.3 FAULT MONITOR

The charger is constantly monitored for fault conditions. If a fault occurs, the charge in progress is terminated, all data for that charge is lost, and the charger's display shows the fault code. Table 6 describes the fault codes.

A fault is cleared by pressing the STOP push button. Determine the cause of the fault and correct it before restarting the charge cycle.

Table 6

Fault Code	Description
E1	Battery current less than expected.
E3	Output current exceeds expected by over 10%.
E4	Voltage greater than 3.000 v/c.
E7	Failed to complete the charge cycle within the allotted time.

7.2 PROGRAMMABLE OPTIONS

There are three options which you can modify by entering the programming mode:

F1 Delay Start Option

F2 Equalize Counter Option

F3 Automatic/Manual Start Option

With no battery connected to the charger, and the display alternating between "C=XX" and "E=XX", press and hold down the DISPLAY and DAILY push buttons at the same time. After approximately 5 seconds, the display will contain only dashes (disregard the display until it contains only dashes). When the dashes display, release all the push buttons. The display should contain F1.

You can now modify the options. Use the UP and DOWN arrow push buttons to select the desired option to modify. Press the SELECT push button and that option number's variable will be displayed.

To change a variable number on the display, use the UP and DOWN arrow push buttons until the desired number is displayed, then press SELECT to save the new number.

Holding the UP or DOWN arrow push buttons down increases the speed the numbers change. To exit the programming mode, press the STOP push button. If the STOP push button is pressed while an option variable number is displayed, the number will not be saved when programming mode is exited.

7.2.1 DELAY START (F1)

This option is only functional when the charger is set to Automatic Start (option F3).

The Delay Start option allows you to delay the start of the charge. It can be set from a minimum of 0 minutes (0.0.0.0) to a maximum of 20 hours (2.0.0.0). Delay Start immediately begins counting down when a battery is connected to the charger. If the Delay Start option is set to 0, charging will begin when a battery is connected to the charger.

EXAMPLE: TO SELECT 2 MINUTES, ENTER "0.0.0.2" ON THE DISPLAY. WHEN YOU CONNECT THE BATTERY, THE DISPLAY WILL COUNT DOWN IN 1 MINUTE INCREMENTS.

RANGE IS 0.0.0.0 TO 2.0.0.0

FACTORY SETTING IS 0.0.0.0

7.2.2 EQUALIZE COUNTER (F2)

This option is only functional when the charger is set to Automatic Start (option F3). The Equalize Counter option determines which charge cycle will be an equalize cycle. For example, if the Equalize Counter is set to 5 (E=05 is shown on the display), every fifth charge cycle will be an Equalize charge cycle. The Equalize counter can be programmed with a number from 0 to 20.

If this option is set to 1, an equalize will automatically occur every charge cycle when the charger is in Automatic mode. If this option is set to 0, automatic equalize is disabled. You will have to press the equalize push button to begin an equalize charge cycle.

The Cycle counter increments each time a charge cycle successfully completes, unless the time spent in Start current mode is less than one hour. When the Cycle counter "C=XX" and the Equalize counter "E=XX" contain the same value, and Equalize charge cycle is performed, and the Cycle counter is reset to 1 after the charge cycle is terminated and the battery is disconnected.

RANGE 150 T0 20.

FACTORY SETTING IS 5.

7.2.3 AUTOMATIC/MANUAL START (F3)

The Automatic/Manual start option determines if a charge cycle will be performed in Automatic or Manual mode. The following lists what will happen when your charger is operating in Automatic (1) mode.

1. Actual charging will begin after the time specified in Delay Start (option F1) elapses.
2. If the Equalize Counter option (option F2) is not 0, then an Equalize charge cycle will be automatically performed as specified by that option.
3. A Refresh charge cycle will occur if the battery is left connected to the charger for longer than 12 hours (Refresh Wait Period), after the charge cycle has completed.

If this option is set to Manual (2), the charge cycle will not begin after the battery is connected to the charger until you press either the DAILY or EQUALIZE push button. The following lists what to expect when operating your charger in Manual mode.

1. Charging will begin as soon as you press the DAILY or EQUALIZE push button (when a battery is connected to the charger).
2. To begin a Refresh charge cycle (when a charge cycle has completed and the display contains "OFF"), press the REFRESH push button. The Refresh charge cycle will begin immediately.

RANGE IS 1 T0 2.

FACTORY SETTING IS 1 (AUTOMATIC)

7.3 NORMAL OPERATION

The D1 is shipped factory set for Automatic Start, Time-Voltage Charge termination, and Automatic Equalize every fifth cycle. The following is a brief description of this operation.

With no battery connected, apply AC power to the charger. The LEDs will blink momentarily, then the AC ON LED will remain on, and the display will alternate between "C=xx" and "E=yy" where xx represents the Charge counter and yy the Equalize counter.

Connect the battery to be charged. If the Automatic Start feature is active, the START LED will light, the charger will start outputting Start rate current, and the display will begin to show the charger amps. Automatic Start can be delayed by programming a value, other than "0.0.0.0" (HH:MM), in the Delay Start option. You can set the Delay Start option to delay the start of the charge cycle for up to 20 hours, in 1 minute increments.

When the 80% (Gassing Voltage) point is reached, the 80% LED will light, (the START LED remains on) and charge current will begin to taper.

After the 80% point is reached charging will continue for 3 hours for D1 (wet) and 6 hours for SD1 (sealed) before shutoff. If charging current reaches finish rate before shutoff the FINISH LED will light (the START and 80% LEDs remain on), and charging will continue for the allotted time. If no Equalize charge is to be applied to the battery, the charger will stop and the display will read "OFF" (the START, 80%, and FINISH LEDs remain on). To display charge data press the DISPLAY button.

If the battery is to receive an Equalize charge, the charge cycle continues for 3 more hours and then stops with the display reading "OFF".

When the battery is disconnected, only the AC ON LED stays on, and the display will read "C=xx+1" and "E=yy". The Cycle counter is incremented by 1 each time a charge cycle completes, unless the time spent in Start Rate is less than 1 hour. If the time spent in Start Rate is less than one hour, then the Cycle counter will not increment.

The Automatic Equalize feature is active when Automatic/Manual Start option is set to automatic. When the Cycle counter equals the Equalize counter, an Equalize charge cycle will be performed (indicated by the EQUALIZE LED blinking), and the Cycle counter will be reset to 1. The EQUALIZE LED will light steady once the 3 hour Equalize charge period begins.

If you press the EQUALIZE push button during a Daily charge cycle, it will become an Equalize charge cycle. If you press the DAILY push button during an Equalize charge cycle (but before Equalize mode begins), it will become a Daily charge cycle.

If the battery remains connected to the charger for 12 hours (Factory default setting) after termination, a Refresh charge will be given to it. A Refresh charge is 20 minutes of charge. The REFRESH LED will blink during the 12 hour delay, then light steady when the charge is being given and blink when done.

AC power failures, loss of a phase, or brownout conditions are detected by the control circuitry. If this occurs, present charger operating conditions are saved. If a battery is connected when the AC “failure" occurs, its charge cycle status is saved. If a battery is connected when AC power returns, the charger program checks to see if there is saved

status, and if so, assumes that the connected battery is the same battery that was connected when power "failed" and tries to restart the charge cycle where interrupted. The FAULT light will remain ON. Therefore, it is important to only cycle the power to a charger with no battery connected, so that erroneous charges are not applied to batteries (unless you want to continue charging the same battery).

8. CHARGE TIME

The amount of time a battery charges will vary depending on the depth-of-discharge (DOD). A normal charge cycle will be terminated one of two ways; Time-Voltage (three hours) after the 80% point or DV/DT (when the charger senses a very small change in battery voltage during its sampling time period). Time-Voltage is the factory default shutoff mode. Normal charge cycles will usually not exceed ten hours. If a D1 control module is set for sealed batteries, the Time-Voltage is six hours and the Equalize is nine hours after the 80% point for terminations.

An equalize charge cycle for wet batteries will terminate six hour after 80% has been reached. Both normal and equalize charge cycles will terminate if they extend beyond the maximum allowed time of 14 hours.

9. MAINTENANCE

The charger requires minimal maintenance. It should be kept clean and all connections tight. BE SURE THE CHASSIS IS SECURELY GROUNDED. Twice a year or as often as the cleanliness of the area may dictate, the louvers should be vacuumed and the interior thoroughly blown with dry air.

10. PARTS LIST

The following is a list of parts found in the various model D1/SD1 chargers. When replacing a part, USE ONLY ORIGINAL FACTORY REPLACEMENT PARTS of the correct size and rating.

CHARGER MODEL	6/450B	6/550B	6/680B	12/380B	12/550B	12/680B	12/750B	12/850B	18/600B	18/800B	24/600B
INPUT VOLTAGE RANGE	18880	18890	18900	18910	18920	18930	18940	18950	18960	18970	18980
208/240/480	12V	12V	12V	24V	24V	24V	24V	24V	36V	36V	48V
LARGE TRANSFORMER ASSY.	18885S	18895S	18905S	18915S	18925S	18935S	18945S	18955S	19965S	18975S	18985S
SMALL TRANSFORMER ASSY.	18845S	18845S	18845S	18845S	18845S	18845S	18845S	18845S	18845S	18845S	18845S
SCR ASSY.	13716S	13716S	12948S	13716S	13716S	12948S	12948S	12948S	13716S	12948S	13716S
CASE, BASE PANEL, D1	25007S	24453S	25008S	25009S	24478S	24481S	25202S	25332S	25196S	25382S	25304S
CASE, INNER PANEL	25003S	24457S	25004S	25006S	24479S	24482S	25201S	25331S	25198S	25408S	25307S
DC CORD BUSHING	02008S	02008S	02009S	02008S	02008S	02009S	02009S	02009S	02009S	02009S	02009S
DC FUSE (F3)	04898S	10910S	10910S	10905S	10910S	10901S	10901S	17678S	10910S	10901S	10901S
FUSE (F1, F2)	T15A	T15A	T20A	T25A	T30A	T35A	T40A	T45A	T50A	T60A	T60A
WIRED FOR 208	25708S	25708	04931S	25709S	10252S	05165S	04930S	25711S	05173S	05290S	05290S
FUSE (F1, F2)	T12A	T15A	T20A	T20A	T25A	T30A	T35A	T40A	T40A	T60A	T60A
WIRED FOR 240	25707S	25708S	04931S	04931S	25709S	10252S	05165S	04930S	04930S	052905S	05290S
FUSE REDUCER (F1, F2)	-	-	-	-	-	04938S	-	-	-	-	-
FUSE (F1, F2)	T6A	T8A	T10A	T10A	T15A	T15A	T20A	T20A	T20A	T30A	T30A
WIRED FOR 480	25703S	25704S	25706S	25706S	25708S	25708S	04931S	04931S	04931S	10252S	10252S
FUSE REDUCER (F1, F2)	-	-	-	-	-	04938S	04938S	04938S	04938S	04938S	04938S
FUSEHOLDER (F1, F2)	13366S	13366S	13366S	13366S	13366S	12869S	12869S	12869S	12869S	12869S	12869S
HEATSINK	13619S	13619S	12688S	13619S	13619S	12688S	12688S	12688S	13619S	12688S	13619S
TAP STRIP, 7 POLE	17716S	-	-	-	-	-	-	17716S	17716S	17716S	17716S
TAP STRIP, 12 POLE	23346S	23346S	23346S	23346S	23346S	23346S	23346S	-	-	-	-
TAP STRIP, 2 POLE	19242S	-	-	-	-	-	-	19242S	19242S	19242S	19242S
CONTACTOR MODULE KIT	24693K	24693K	24693K	24693K	24693K	24693K	24693K	24693K	24693K	24693K	24693K

CHARGER MODEL INPUT VOLTAGE RANGE 120/208/240	6/450-1 18990 12V	6/550-1 19000 12V	12/380-1 19010 24V
LARGE TRANSFORMER ASSY.	18995S	19005S	19015S
SMALL TRANSFORMER ASSY.	18575S	18575S	18575S
SCR ASSY.	13716S	13716S	13716S
CASE, BASE PANEL, D1	25383S	25384S	25386S
CASE, INNER PANEL	25404S	25406S	25407S
DC CORD BUSHING	02008S	02008S	02008S
DC FUSE (F3)	04898S	10910S	10905S
FUSE (F1, F2) WIRED FOR 120	T20A 04931S	T25A 25709S	T35A 05165S
FUSE (F1, F2) WIRED FOR 208 FUSE REDUCER (F1, F2)	T12A 25707S 04938S	T15A 25708S 04938S	T20A 04931S 04938S
FUSE (F1, F2) WIRED FOR 240 FUSE REDUCER (F1, F2)	T10A 25706S -	T12A 25707S -	T20A 04931S 04938S
FUSEHOLDER (F1, F2)	13366S	13366S	12869S
HEATSINK	13619S	13619S	13619S
TAP STRIP, 12 POLE	23346S	23346S	23346S
CONTACTOR MODULE KIT	24693K	24693K	24693K

*Included with door assembly

COMMON PARTS	
CASE, FRONT PANEL	24449S
CASE, BACK PANEL	24452S
CASE, SIDE PANEL	24451S
CASE, TOP PANEL	15002S
CASE, DOOR ASS'Y	27612S
RUBBER DOOR BUMPER	13592S
DOOR HANDLE	22851S
DOOR LATCH	17689S
BEZEL ASS'Y, D1 *	18278S
CONTROL MODULE, D1	19185S
TRANSFORMER MOUNTING RAIL	22952S
REMOTE CONTROL, D1	25737S
SHUNT	12867S
VARISTOR ASSY.	24278S
HEATSINK MOUNTING PLATE	19476S
SHUNT INSULATOR	12947S
INNER PANEL BUSHING, BLACK	03792S
AC GROUND LUG	14998S
FUSEHOLDER (F4)	17842S
FUSE, 1 AMP (F4)	04630S
FUSE INSULATOR	12616S
FUSE, 3 AMP (F5, F6)	04688S
FUSEHOLDER (F6, F7)	24407S
WIRE JUMPER (Set of 6)	17869S

11. SYSTEM SCHEMATICS

11.1 SYSTEM SCHEMATIC FOR 120/208/240 MODELS W/ AC CONTACTOR

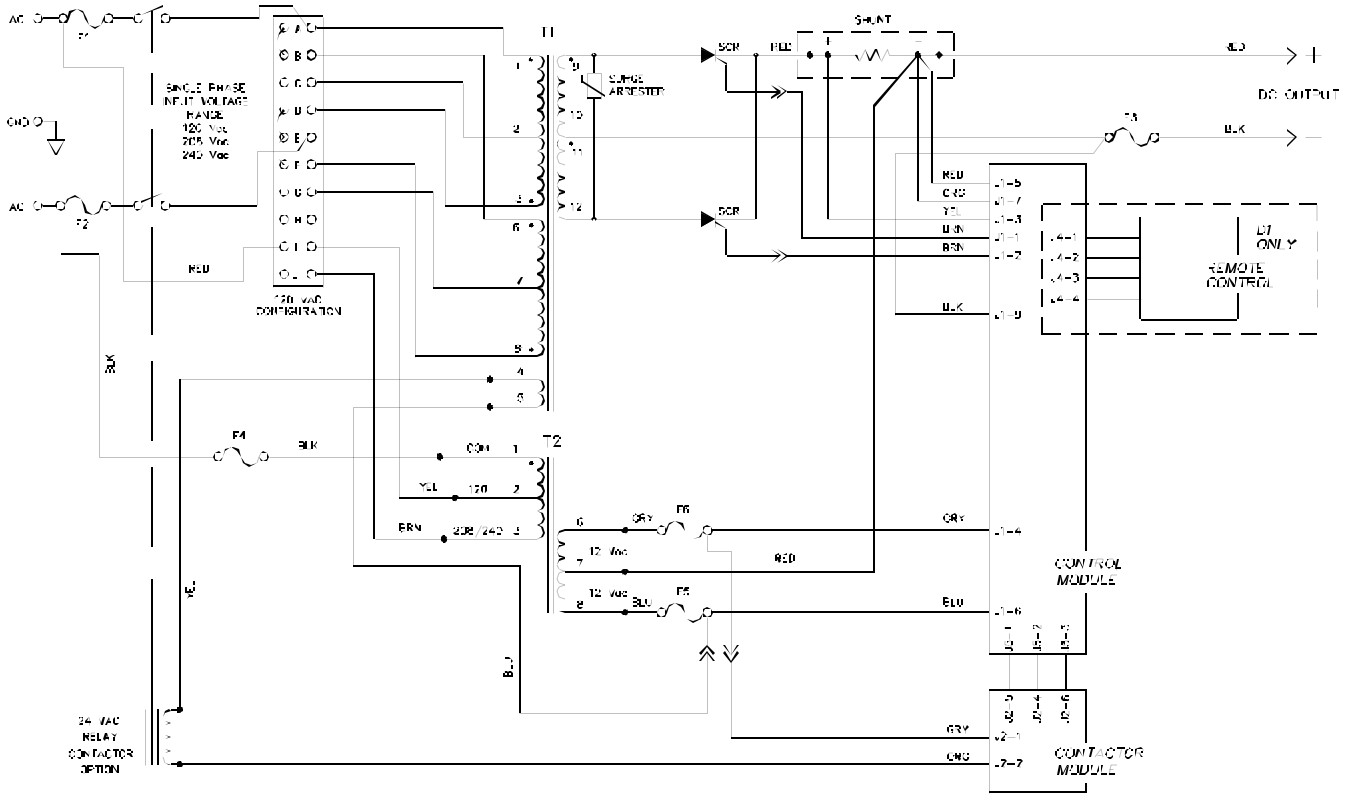

11.2 SYSTEM SCHEMATIC FOR 120/208/240 MODELS W/O AC CONTACTOR

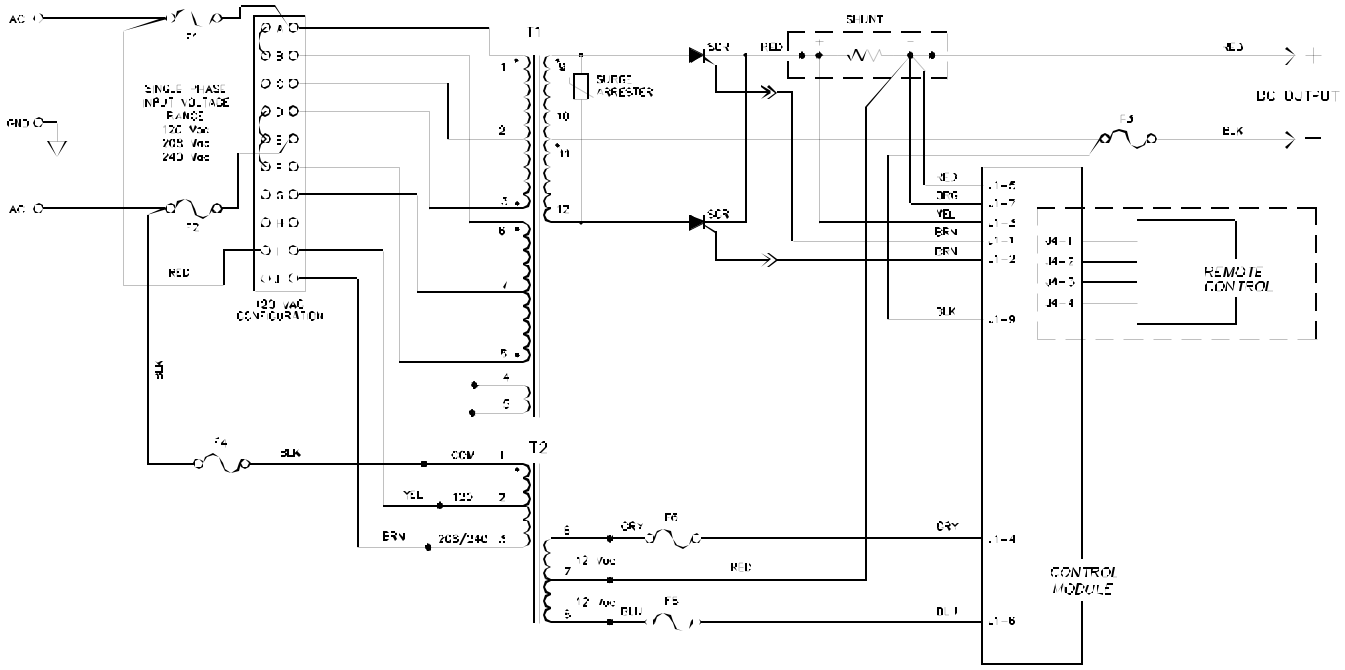

11.3 SYSTEM SCHEMATIC FOR 208/240/480 MODELS W/ AC CONTACTOR

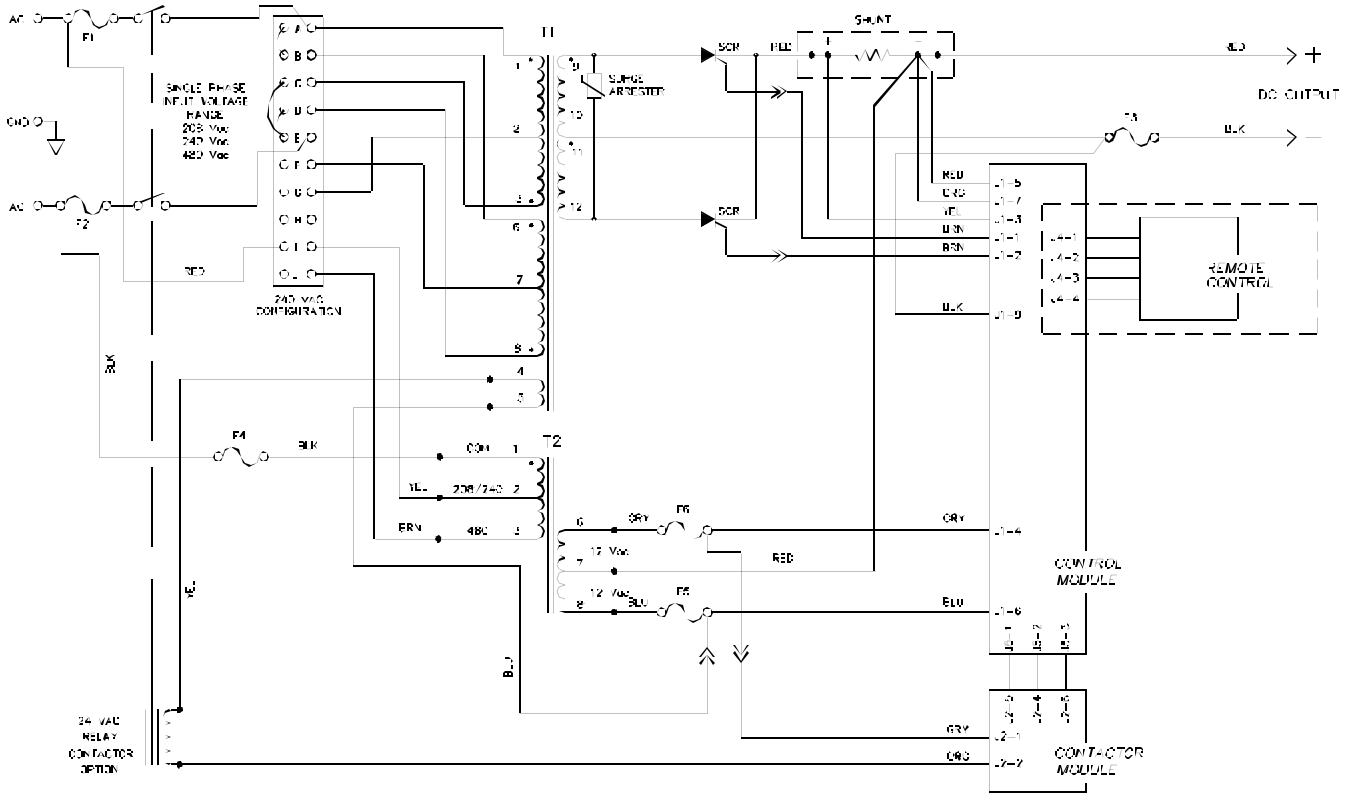

11.4 SYSTEM SCHEMATIC FOR 208/240/480 MODELS W/O AC CONTACTOR

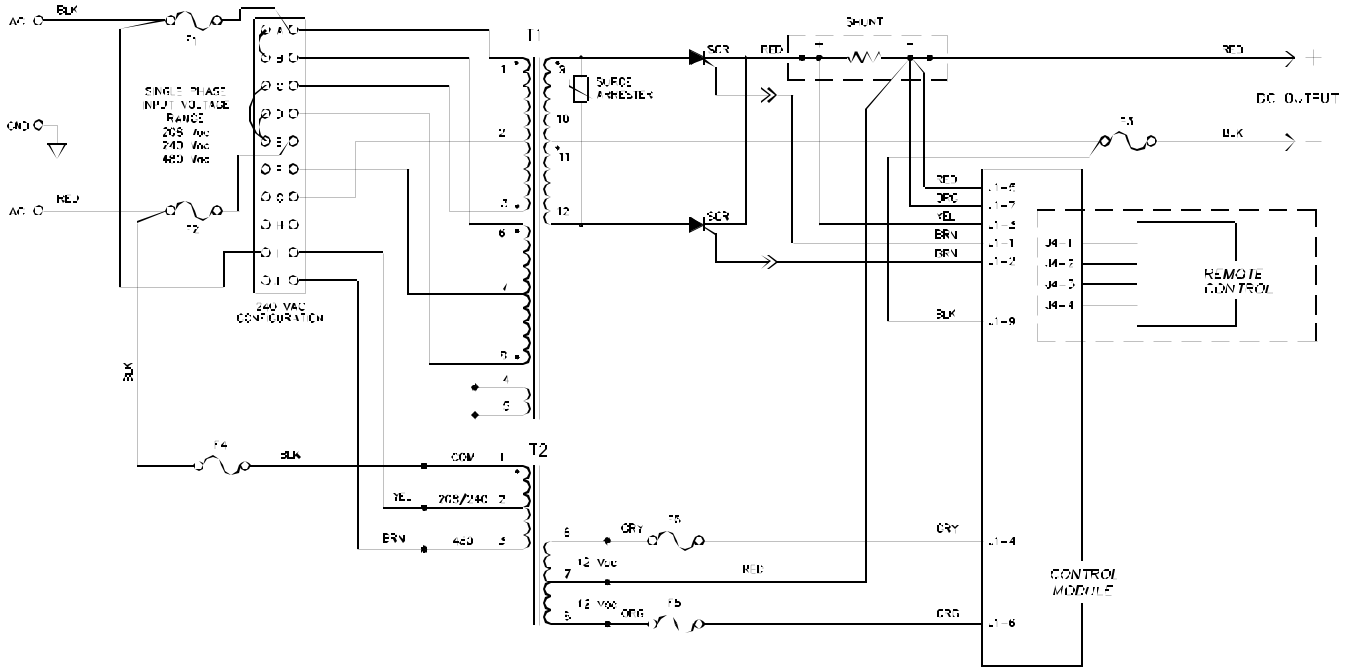

CHARGER SUPPLEMENT - ENERSYS D3G-24-680

NOTE: The information contained in the following pages was obtained from the charger manufacturer
Contact the manufacturer for questions or more information.

Refer to manufacturers web site for contact information: www.enersysmp.com/

Owner's Manual

3PH. Model D3G

Battery Charger

208/240/480 V. 60Hz
480/550/600 V. 60Hz
220/380/440 V. 50Hz
400 V. 50Hz

DEPTH CHARGER™

To automatically be connected to your closest Service Center, call us toll-free at:
1-866-443-9433
visit us at: www.enersysmp.com

I.B. 1524
REV D
SECTION 28.42

Model:	S/N	AC input Voltage
Installed By		Date

IMPORTANT

Read and understand your owner's manual before installing, operating, or servicing this product. DO NOT DESTROY THIS BOOK

AC LINE VOLTAGE LETTER CODES

The following table describes the code letters to be used in new charger part numbers to indicate the AC line voltage(s) and AC line frequency at which the charger can be operated.

Code Letters	Voltage(s) (volts rms.)	Line Frequency (Hz)	Comments
B	208/240/480	60	Applicable to all charger families; single or three phase chargers.
D	220/380/440	50	Applicable to all charger families; single or three phase chargers.
J	480/550/600	60	Applicable to all charger families; single or three phase chargers.
T*	208	60	Use only for special designs; single or three-phase.
W*	240	60	Use only for special designs; single or three-phase.
X*	240/480	60	Use only for special designs; single or three-phase.
Y*	480	60	Use only for special designs; single or three-phase.
E	400	50	Use only for three phase, SCR chargers
S	SPECIAL VOLTAGES	UNSPECIFIED	Use only for special designs; Contact the plant for further information.
* Replacement part numbers for chargers with such letter codes shall be referred to the charger's tables with code letter "B"			

SPECIALTY CHARGER OPTIONS LIST

Check items included (✓)

✓	Suffix	Description	Kit part #**
	C6	6' of #10AWG AC Cord with 30 AMP Plug. *	X225-77-2
	C8	8' of #10AWG AC Cord with 30 AMP Plug. *	N/A
	C10	10' of #10AWG AC Cord with 30 AMP Plug. *	N/A
	C12	12' of #10AWG AC Cord with 30 AMP Plug. *	N/A
	CF	10' of #8AWG AC Cord with 50 AMP Plug. *	N/A
	CF12	12' of #8AWG AC Cord with 50 AMP Plug. *	N/A
	CR	6' of #10AWG AC Cord with 30 AMP Plug and 30AMP receptacle. *	X225-77-1
	D	Charger with AC Disconnect Switch.	
	HD3	6' of #10AWG AC Cord with 30 AMP Plug. *	X225-77-2
	HD4	6' of #10AWG AC Cord with 30 AMP Plug and Receptacle. *	X225-77-1
	L13	13' of DC cable.	See page # 20
	L15	15' of DC cable.	See page # 20
	L18	18' of DC cable.	See page # 20
	L20	20' of DC cable.	See page # 20
	L25	25' of DC cable.	See page # 20
	L30	30' of DC cable.	See page # 20
	LM	SCR Charger with Load Management Control	N/A
	O	Special configuration of a standard EPROM	N/A
	P	Parallel DC cables, standard size.	N/A
	PP	Charger shipped on a Plastic Pallet	N/A
	Q	AC input change Quick Tap™	N/A
	S	Series DC cables	N/A
	T	Block Out Timer switch.	N/A
	Z	Combination not listed	N/A
		Stacking Hardware Kit**	X225-99-0-2
		Wall Mounting Brackets**	X225-99-0-1
*When AC cord is installed at the factory only one input voltage is marked on the charger. **Accessories			

Note: refer specialty charger part numbers to the standard models contained in this manual

TABLE OF CONTENTS

IMPORTANT SAFETY INSTRUCTIONS

1. This manual contains important safety and operating instructions. Before using the battery charger, read all instructions, **cautions**, and **warnings** on the battery charger, the battery, and the product using the battery.
2. Read and understand all setup and operating instructions before using the battery charger to prevent damage to the battery and to the charger.
3. **Do not** touch non-insulated parts of the output connector or the battery terminals to prevent electrical shock.
4. During charge, batteries produce hydrogen gas, which can explode if ignited. Never smoke, use an open flame, or create sparks in the vicinity of the battery. Ventilate well when the battery is in an enclosed space.
5. **Do not** connect or disconnect the battery plug while the charger is on. Doing so will cause arcing and burning of the connector resulting in charger damage or battery explosion.
6. Lead-acid batteries contain sulfuric acid, which causes burns. **Do not** get in eyes, on skin, or on clothing. In cases of contact with eyes, flush immediately with clean water for 15 minutes. Seek medical attention immediately.
7. Only factory qualified personnel can service this equipment. For service, contact the nearest *EnerSys Battery* authorized representative. (1-866-443-9433)
8. De-energize all AC and DC power connections before servicing the charger.
9. The charger is **not** for outdoor use.
10. Do not expose the charger to moisture. Operating **conditions** should be 0º to 104º F; 0 to 70% relative humidity.
11. Do not operate the charger if it has been dropped, received a sharp hit, or otherwise damaged in any way.
12. For continued protection and to reduce the risk of fire, install chargers on a floor of non-combustible material such as stone, brick, or grounded metal.

WARNING: The shipping pallet must be removed for proper and safe operation.

INSTRUCTIONS DE SÉCURITÉ IMPORTANTES

1. Ce manuel contient des informations et des consignes importantes pour l'installation et l'utilisation du chargeur de batteries industrielles. Avant tout emploi, il est fortement conseillé de lire l'ensemble des instructions, recommandations, et avertissements concernant le chargeur et la batterie.
2. Ce chargeur a été conçu pour la charge des batteries industrielles de type plomb-acide dites « ouverte ». (il ne peut pas être adapté pour les batteries étanches.)
3. Lisez toutes les consignes d'installation et d'utilisation avant d'employer le chargeur de batteries afin de prévenir tout dommage envers la batterie et/ou le chargeur.
4. **Ne pas se mettre en contact avec** les pièces sous-tension non-isolées tels que la prise de charge ou les éléments de connexion de la batterie pour empêcher tout choc électrique.
5. Pendant la charge, le dégagement d'hydrogène rend l'emploi de feu strictement interdit: « risque d'explosion ». Ne jamais fumer, employer une flamme nue ou créer d' étincelles à proximité de la batterie. Ventiler suffisamment le local de charge pour éviter toute condensation de gax dans un espace restreint.
6. **Ne brancher ou débrancher la batterie que si le chargeur est à l'arrêt.** Procéder ainsi permet d'eviter d'endommager la prise de charge et de causer des dommages au chargeur ou l'explosion de la batterie.
7. Les batteries d'acide qu plomb contiennent de l'acide sulfurique pouvant causer des brûlures. Eviter le contact avec les yeux, la peau ou les vêtements. Dans le cas d'un contact avec les yeux, rincer aussitôt avec de l'eau propre pendant 15 minutes et consulter un médecin immédiatement.
8. Seul le personnel qualifié par l'usine peut entretenir cet équipement.
9. Avant toute intervention d'entretien ou de réparation, il est impératif de s'assurer que le chargeur est hors tension ainsi que la batterie déconnectée du chargeur.
10. Le chargeur **n'est** pas conçu pour fonctionner en usage extérieur.
11. Ne pas exposez le chargeur à l'humidité. Les conditions de fonctionnement doit être comprise entre -15° et + 40°C avec une humidité relative de 0 â de 70%.
12. Ne pas mettre en fonctionnemente le chargeur s'il a reçu un choc mécanique ou tout autre dommage de quelque façon.
13. Pour une protection permanente et pour réduire le risque du feu, installez les chargeurs sur un plancher ou un matériel non-combustible tel qu'un sol plein en beton, en brique ou le acier.

TECHNICAL INFORMATION

The nameplate, located on the outside of the charger, should be used to check this application before installation.

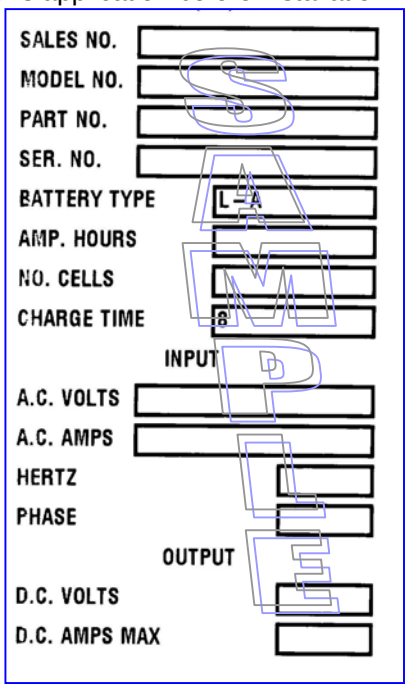

Part Number
This number specifies in general the characteristics of this particular charger and for this reason it is required in any discussion or correspondence regarding this unit.

Serial Number
This number indicates complete information about the specific charger. It must be supplied with the part number on any correspondence or discussion regarding this charger.

Battery Type
The chemical content construction of the battery this unit is designed to charge is given in this part of the nameplate.

Ampere-Hours
The information supplied here is the ampere-hour battery capacity which this unit has been factory adjusted to recharge. Charging batteries of ampere-hour capacities not specified here might cause the charger to deviate from the specifications.

Cells
This portion of the nameplate gives the maximum number of cells this unit will charge.

Input AC Volts
The nameplate shows the input voltage(s) accommodated by this charger.
IMPORTANT: The charger will operate only on nominal line voltages stamped on the nameplate.
Failure to select the correct voltage will result in damage to the charger and/or the battery.
The Voltage Conversion section of this manual provides jumper settings for a specific input voltage.

Input AC Amps
The external fusing and/or the line disconnect circuit breaker should be as specified in the National Electrical Code. (AC fuse values can be found on the decal inside the charger).

Hz
This gives the frequency in cycles per second of the AC input voltage. Under no conditions operate charger at a different frequency or from a generator with unstable frequency.

Phase
- Number "3" indicates a Three Phase Charger.

DC Volts
This gives the nominal DC output voltage of the system.

Rated DC Amps
This is the nominal DC value of current that this unit will deliver to a battery that is 100% discharged.

INSTALLATION

WARNING: The shipping pallet must be removed for proper and safe operation.

LOCATION

For maximum trouble-free service, choose a location which is free of excess moisture, dust, and corrosive fumes. Also, avoid locations where temperatures are high or where liquids will drip on the charger. Allow six (6) inches of clearance at rear and sides of the charger for air circulation. Do not obstruct the ventilating openings or the space under the charger.

Stacking Multiple Chargers

These chargers can be stacked up to a maximum of 3 units high. Chargers are not designed to be stacked side by side due to ventilation requirements.

1. Position the first charger so that a minimum of 6 inches of space is between the charger and any wall, and 12 inches between the charger and any other equipment.
2. Place the second charger on top of the first. Align the bolt holes on each charger.
3. Fasten both charger cabinets together securely using 3/8” bolts and nuts.

NOTE: the two bolts toward the back of the charger may be omitted if an after market metal strap (about 8 inches) is used to secure both chargers. Remove existing 1/4" screws of the chargers' sides and attach strap with screws. Refer to picture.
Hardware kit # X225-99-0-2 can be ordered to attach two chargers.

4. Repeat steps 2 and 3 for the third charger.
5. Stacked chargers must be fastened to the wall using devices suitable for the wall construction and the bolt holes at the top of the highest charger.

NOTE: Ambient temperature at all levels cannot exceed 104°F / 40°C.

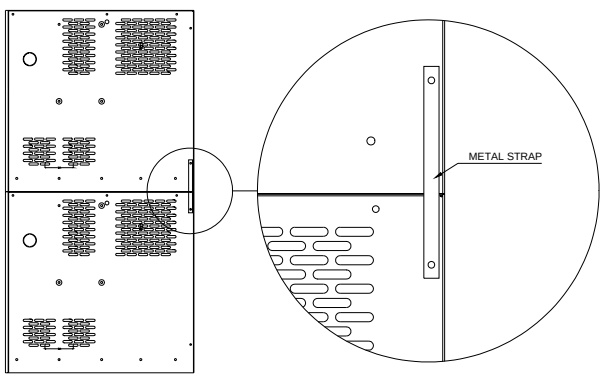

TWO STACKED CHARGERS, RIGHT SIDE VIEW

ELECTRICAL CONNECTIONS

To prevent failure of the charger, be sure it is connected to the correct line voltage.

Phase A to L1 (fuse block)
Phase B to L2 (fuse block)
Phase C to L3 (fuse block)

Connecting Input Power

WARNING: Make sure the AC POWER is OFF and the battery is disconnected before connecting the input

Connect the input power to the appropriate terminals, ***including ground***. Follow your local electrical or National Electric Code in making these connections.
The figure that follows shows both, the top and right side installation options for routing the incoming power cable.

IMPORTANT: When the AC Disconnect Switch is factory installed connect the input power to the Switch instead the AC fuse block.

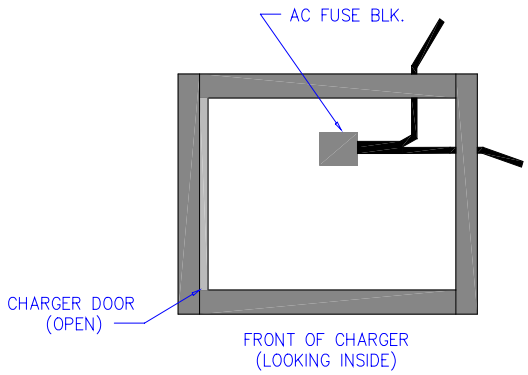

Branch Circuit Protection

The user must provide suitable branch circuit protection and a disconnect method from the AC power supply to the charger to allow for safe servicing. (Even if the charger has an optional factory installed Disconnect Switch)

Plug Polarity

The charging cable is connected to the DC output of the charger with the positive lead marked RED. The output polarity of the charger must be strictly observed when connecting to the battery (read warning above). Improper connection will open the DC fuse.

Grounding the Charger

DANGER: FAILURE TO GROUND THE CHARGER COULD LEAD TO FATAL ELECTRIC SHOCK. Follow National Electric Code for ground wire sizing.

Connect a grounding conductor to the lug provided on the horizontal support panel. This lug is marked as shown:

CHARGER FEATURES

GENERAL

The standard D3G charger has a wide range of charging features for both flooded and sealed cell batteries. The D3G is capable of charging various cell sizes and ampere-hour ratings as listed on the charger nameplate. Some of the basic features are described below.

MULTIPLE BATTERY SELECT

A total of 5 completely different battery profile selections can be stored and quickly selected for the customer that has multiple battery types and sizes. Contact your sales/service representative for information.

AUTO START/DELAYED START

Auto Start enables the battery charger to start the charge cycle automatically after the battery is connected to the charger. A programmable delay can be programmed so that Auto Start will begin after a set time period. This delay can be set through the front panel display, refer to ***d - St*** in section **User Parameter Configuration**. Auto start can be delayed anywhere from 0 up to 25 hours, in one minute intervals.

AUTO EQUALIZE CYCLE

An Equalize Cycle adds a predetermined amount of time to extend the battery's charge cycle. This charger is equipped with an Auto Equalize function. This is a configurable parameter; consult your service representative for more information. The factory default setting for the Auto Equalize cycle is 3 hours of charge time for every fifth charge cycle. A charge cycle consists of at least one hour of continuous charging of the battery by the charger. Every time the battery completes a charge cycle, the charge counter is incremented. When the charge counter reaches the programmed Equalize count value, an equalize cycle will occur immediately after the battery completes its normal charge cycle. When an equalize charge cycle is pending, the **EQUALIZE** LED will flash. The equalize button can be pressed at any time during the normal charge cycle to stop the pending equalize cycle. Once the battery has completed a successful charge cycle, the **CHARGE COMPLETE** LED will light and the charger will immediately go into the equalize charge cycle. The **EQUALIZE** LED will then light steadily. Pressing the **EQUALIZE** button during the equalize charge cycle will have no effect on the charger.

MANUAL EQUALIZE CYCLE

The charger can also equalize a battery manually. Pressing the **EQUALIZE** button at any time during the charge cycle will activate the equalize function. Once pressed, the **EQUALIZE** LED will begin to flash indicating that an equalize cycle will occur once the battery has completed a successful charge cycle. The **EQUALIZE** button can again be pressed at any time during the normal charge cycle to stop the pending equalize cycle. The **CHARGE** counter is reset every time the battery completes a successful equalize charge cycle. Pressing the **EQUALIZE** button during the equalize charge cycle will have no effect on the charger.

> **NOTE:** Since Equalize charging extends the recharge time; it is best to do this when additional cooling time is available (example: on a weekend). Consult your factory representative to determine Equalize intervals that meet your needs.

AC POWER FAIL

AC power may fail with a battery connected to the charger during a charge cycle. When AC power returns with the battery connected, the charge cycle will resume the battery charging after a random delay. The charger will also detect an AC fuse open when the charger is charging a battery. This will result in a stopping of the charge cycle and a fault code displayed.

REFRESH CYCLE

If a battery remains connected to the charger for a predetermined amount of time after a charge cycle has been completed, a refresh charge cycle will be given to the battery. The factory default setting for the Refresh Cycle is to refresh for 20 minutes every 24 hours. This is a configurable parameter; consult your service representative for more information.

COOL DOWN

When a battery completes a charge cycle without error, it ideally should cool down before being used. This is a configurable parameter that can be set through the front panel display, refer to ***c o o L*** in section **User Parameter Configuration.** The factory default setting for the Cool Down is 1 hour.

PARALLEL CHARGING (OPTIONAL)

In parallel charging, batteries must have an equal number of cells and must match the charger nameplate's ratings. Amp-Hour rating of charger must be equal to the Amp-Hour of both batteries combined. Theoretically, charging current is equally divided between both batteries provided that batteries % of discharge and ages are equal. Make sure both batteries are connected before charge cycle starts.
The charger must be set for parallel cable <u>and</u> have Auto Cell sizing disabled in the service settings. Contact your sales/service representative.

SERIES CHARGING (OPTIONAL)

In series charging, the voltages of both batteries add up and must match charger's nameplate rating. Charger's Amp-Hour rating must be equal to each of the batteries Amp-Hour rating. Charge cycle will not start unless both batteries are connected.

AC DISCONNECT (OPTIONAL)

When an AC disconnect is installed, access to the charger through the front door is denied unless the AC disconnect is switched off. When the AC disconnect is in the off position, power is only present at the disconnect switch input terminals. Make sure that main breaker is switched off before working on the charger.

AC INPUT CHANGE QUICK TAP™ (OPTIONAL)

Quick Tap™ is a feature to EnerSys chargers that allows the user to change AC input easily and quickly. See the heading VOLTAGE CONVERSION for more information.

CONTROL BOARD

NORMAL OPERATION

1. Idle Mode: When AC input voltage is applied to the charger and no battery is connected, the **POWER** LED will be lit. This message will display in rotation on the front panel display:
   Conn / Bat#
   where Bat# is the selected battery settings 1-5.

2. During Idle Mode, toggling the UP or DOWN pushbuttons will display the previous charge cycle parameters. Toggle the UP or DOWN to display the total charge time, Amp-hours delivered, highest voltage during the previous charge cycle, the number of charge cycles since the last equalize and the equalize count. Only the charge count and equalize count remains in non-volatile memory. These values will be saved even when AC power is removed. The other values will remain in volatile memory until the next charge cycle begins or if AC power is removed.

3. Plug the battery connector into the charger connector. The control board senses voltage. Once the battery is connected to the charger, the **START/STOP** LED will flash for approximately 5 seconds while the display shows this message:
   Strt
   #### Cell
   #### AH
   Fld
   3
   2
   1
   Strt
   Charging will begin. The **START/STOP** LED will light steadily. The LED bar graph will indicate the percent charged status of the battery and the display will now begin to show:

####.#	(Charger output current)
####	(Amp-Hours returned)
##.##	(Charge Time)
#.###	(Cell Voltage)

   These values are displayed in rotation for about 3 seconds each. The display can be changed so that current or voltage, or current and voltage or all the above will be displayed. The default setting is for all the above to be displayed.

   CAUTION: To prevent arcing and burning at the connector and possible battery explosion, press the START/STOP pushbutton first to stop the charge cycle before removing a battery that is currently on charge.

4. When the battery reaches **Gassing Voltage,** the yellow **80%** LED will light and the charge current will begin to taper.

5. After the current tapers to the finish-rate current, charging will continue until the battery voltage flattens or the time in taper equals 5 hours. If no Equalize charge is to be applied to the battery, the charger will stop and the display will read ***done.***

   NOTE: If the battery is to receive an **Auto Equalize** charge, the charge cycle continues for 3 more hours at finish-rate current and then stops with the reading ***done***.

6. When the battery is fully charged the green **Charge Complete** LED will light, the **START/STOP** LED will extinguish and the charger will shut off. At this time the battery is at full capacity and ready for use.

7. When the battery is disconnected, only the **POWER** LED remains lit and the display will return to "***Conn" / " Bat#"*** alternately. The charge counter was incremented by one for the completed charge cycle.

USER PARAMETER CONFIGURATION

ADJUSTING SETTINGS:

The charger's user parameters may only be configured while the charger is in idle mode. Press EQU button and hold for approximately 5 seconds.
After holding the EQU button in for 5 seconds, the display will read ***UsEr*** and is now ready for battery selection. Release the EQU button and the display now reads ***diSP.***

ADJUSTING USER SETTINGS:

For a list of available user parameters and their definitions, see the table below.

You can scroll up through the different parameters by using the **EQUALIZE** pushbutton. In order to adjust the parameters press the **UP** or **DOWN** pushbuttons. If you press and hold the **UP** or **DOWN** pushbuttons for 3 seconds when adjusting the parameters, the options will scroll through at a rapid pace. Release the pushbutton to return to normal scrolling mode. When finished adjusting parameters, press the **START/STOP** pushbutton to exit the user parameter configuration mode and save the parameter settings. The display will now read **CONN BAT#.**

Parameters	Description	Range	Default
diSP	**Display mode** 3 = displays current, A-H retuned, charge time and battery voltage 2 = displays current and voltage only 1 = displays current only 0 = displays voltage only	0-3	3
d-St	**Delayed start** Amount of time delay after a battery is connected to the charger before charging proceeds. Increments in 1 minute intervals.	0 min – 25 hr	.00
CooL	**Cool Down Time** Amount of time after a complete charge cycle that a battery needs to cool down before being utilized.	0 hr – 12 hr	1.00 hr
EU-C	**Equalize Counts** Total amount of charge cycles that need to occur before an automatic equalize charge cycle will take place. (0 indicates that no Equalize charge will occur)	0-20 charge cycles	5 charge cycles

CHARGER FAULTS

The charger control circuitry constantly monitors for several fault conditions. If a fault should occur, the charge in progress is interrupted, and a fault message is displayed on the front panel. A list of the faults and their descriptions follow.

Displayed Fault	Description	Fault LED	Fault Clearing
DC FuSE	Occurs when the DC fuse opens or no DC output current	Call service – YES Bar Graph – Flashes	Can be reset by disconnecting the battery from the charger. Replace Fuse or troubleshoot
OPEn batt	Occurs when a charging battery is disconnected from the charger without first stopping the charge cycle.	Battery Disconnect - YES Bar Graph – Steady On	Can be reset by connecting a battery to the charger.
t-1 Err	Occurs when the time limit to gassing voltage is exceeded.	Time Limit Exceeded - YES Bar Graph – Steady On	Can be reset by disconnecting the battery from the charger
t-2 Err	Occurs when the overall charge cycle time limit is exceeded	Time Limit Exceeded - YES Bar Graph – Steady On	Can be reset by disconnecting the battery from the charger
t-3 Err	Occurs when the time limit after gassing is exceeded	Time Limit Exceeded - YES Bar Graph – Steady On	Can be reset by disconnecting the battery from the charger
Lo batt	Occurs when the battery is first connected and the voltage is between 1.0 and 1.8 volts/cell*	Call Service – NO Bar Graph – Steady On	Can be reset if battery voltage is between 1.8 and 2.4 volts/cell
Hi batt	Occurs when the battery is first connected and the voltage is above 2.4 volts/cell.	Call Service – NO Bar Graph – Steady On	Can be reset if battery voltage is between 1.8 and 2.4 volts/cell
Hot batt	Occurs when there is negative change in battery voltage	Call Service – NO Bar Graph – Steady On	Can be reset by disconnecting the battery from the charger
High AH	Occurs when more than 150% of battery Amp-Hours are returned during the charge cycle	Call Service – NO Bar Graph – Steady On	Can be reset by disconnecting battery from the charger
AC fLt	Occurs when AC fuse is blown or a phase of AC power is interrupted when the charger is charging a battery.	Call Service – NO Bar Graph – Steady On	Can be reset by Disconnecting and reconnecting battery to the charger. Disconnect AC power & check AC source.

VOLTAGE CONVERSION

The charger is designed to operate from nominal line voltages as marked on the nameplate. The line voltage to which the charger is to be converted **must be one of the voltages shown on the charger nameplate**.

DANGER: POWER MUST BE DISCONNECTED BEFORE CHANGING AC INPUT CONNECTIONS.

CAUTION: THERE ARE DANGEROUS VOLTAGES WITHIN THE BATTERY CHARGER CABINET.
ONLY QUALIFIED PERSONNEL SHOULD ATTEMPT TO ADJUST OR SERVICE THIS BATTERY CHARGER

AC INPUT CHANGE (STANDARD)

***NOTE**: Chargers with optional Quick Tap™ please refer to* AC Input Change With Quick Tap™.

1. Change AC fuses to the value of the desired line voltage available for this charger. (AC fuse values can be found on the decal inside the charger).

CAUTION: Failure to perform this step may cause the Control Trans. Primary fuse to open.

2. Change provided jumpers, on the main transformer primary tap location, as shown on the decal inside the door of the charger, or on the following charts. (Jumpers not being used are stored in the manual's envelope inside the charger).

3. Indicate the line voltage change on the decal inside the charger.3PH. Wiring Conn. Charts

WIRING CONNECTION CHART - 3 PHASE SCR CHARGERS
MODEL B

WIRE	208 VOLT INPUT CONNECTION	240 VOLT INPUT CONNECTION	480 VOLT INPUT CONNECTION
D2	F1 to A1	F1 to A1	F1 to A1
D7	F1 to C5	F1 to C6	F1 to C6
D3	F2 to A5	F2 to A6	F2 to A6
D3	F2 to B1	F2 to B1	F2 to B1
D4	F3 to B5	F3 to B6	F3 to B6
D4	F3 to C1	F3 to C1	F3 to C1
A2	A1 to A4	A1 to A4	A3 to A4
A2	A2 to A5	A3 to A6	B3 to B4
A2	B1 to B4	B1 to B4	C3 to C4
A2	B2 to B5	B3 to B6	A3 to A4
A2	C1 to C4	C1 to C4	B3 to B4
A2	C2 to C5	C3 to C6	C3 to C4

WIRING CONNECTION CHART - 3 PHASE SCR CHARGERS
MODEL J

WIRE	480 VOLT INPUT CONNECTION	550 VOLT INPUT CONNECTION	600 VOLT INPUT CONNECTION
D2	F1 to A1	F1 to A1	F1 to A1
D7	F1 to C5	F1 to C6	F1 to C6
D3	F2 to A5	F2 to A6	F2 to A6
D3	F2 to B1	F2 to B1	F2 to B1
D4	F3 to B5	F3 to B6	F3 to B6
D4	F3 to C1	F3 to C1	F3 to C1
A2	A2 to A4*	A2 to A4*	A3 to A4*
A2	B2 to B4*	B2 to B4*	B3 to B4*
A2	C2 to C4*	C2 to C4*	C3 to C4*

*INDICATES TWO JUMPERS

WIRING CONNECTION CHART - 3 PHASE SCR CHARGERS
MODEL D

WIRE	220 VOLT INPUT CONNECTION	380 VOLT INPUT CONNECTION	440 VOLT INPUT CONNECTION
D2	F1 to A1	F1 to A1	F1 to A1
D7	F1 to C6	F1 to C5	F1 to C6
D3	F2 to A6	F2 to A5	F2 to A6
D3	F2 to B1	F2 to B1	F2 to B1
D4	F3 to B6	F3 to B5	F3 to B6
D4	F3 to C1	F3 to C1	F3 to C1
A2	A1 to A4	A2 to A4	A3 to A4
A2	A3 to A6	B2 to B4	B3 to B4
A2	B1 to B4	C2 to C4	C3 to C4
A2	B3 to B6	A2 to A4	A3 to A4
A2	C1 to C4	B2 to B4	B3 to B4
A2	C3 to C6	C2 to C4	C3 to C4

WIRING CONNECTION CHART
3 PHASE SCR CHARGERS
MODEL E

WIRE	400 VOLT INPUT CONNECTION
D2	F1 TO A1
D7	F1 TO C6
D3	F2 TO A6
D3	F2 TO B1
D4	F3 TO B6
D4	F3 TO C1

AC Input Change With Quick Tap™

If available

CAUTION: CONNECTOR IS KEYED AND PINS ARE FRAGILE.

1. Change AC fuses to the value of the desired line voltage available for this charger. (AC fuse values can be found on the decal inside the charger).
2. Change Quick Tap™ plug to the desired line voltage as marked under the sockets.
3. Indicate the line voltage change on the decal inside the charger.

Wiring Conn. Illustration

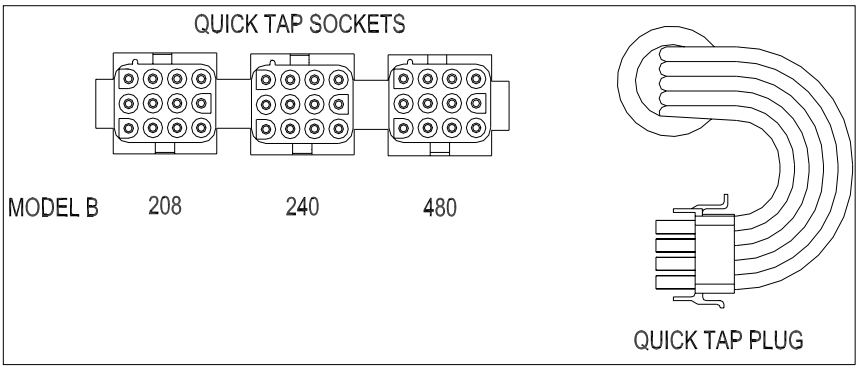

MAINTENANCE & SERVICE

The charger requires a minimum of maintenance. Connections and terminals should be kept clean and tight. The unit should be periodically cleaned with an air hose to prevent any excessive dirt build up on components. Care should be taken not to bump or move any adjustments during cleaning. Make sure that both the AC lines and the battery are disconnected before cleaning. The frequency of this type of maintenance depends on the environment in which this unit is installed.

To automatically be connected to your closest Service Center, call us toll-free at

1-866-443-9433

or, visit us at **www.enersysmp.com**

COMMON REPLACEMENT PARTS

PC BOARD	
X1060-04-D3G-1	Standard Models

COMMON TO ALL 3PH STANDARD CHARGERS

Description	Part Number	Ref.*	Description	Part Number	Ref.*
Door	X054-99-3-2DG	18	DC cable clamp (for 4/0 cable)	356-5-16	20
Top Panel Back Panel	X052-99-3-12 X057-99-3-16	4	Rivets (Latch)	164-8-6	N/A
Side Panel, Left	X057-99-0-5	3	"Fuse Reducer" (less than 70A. fuse into 100A. fuse block)	X014-17-6	N/A
Side Panel, Right (Standard output holes for #2-3/0AWG cable)	X057-99-0-6	2	"Fuse Reducer" (less than 40A. fuse into 60A. fuse block)	X014-17-5	N/A
Side Panel, Right (Oversized output holes for 4/0AWG cable)	X057-99-0-7	2	Ground Lug	X012-7-24	19
Base	3ph Base kit***	1	PC Board Fuses	X014-7-28	12
Cross Member, Heat Sink	3ph. Base kit***	11			
Cross Member, Main Transformers	3ph. Base kit***	6			
Upright	X052-99-0-6	5			
Door Latch	X044-1-32	N/A			
Term. Bd., Primary "G" left, Main Transformer	256-99-12	15			
Term. Bd., Primary "H" right, Main Transformer	256-99-13	15			
DC cable clamp (for #2, 1/0, 2/0, & 3/0 cable)	356-5-15	20			

*Refer to item numbers on the following illustrations.

***** Parts require a Base kit: Determine the appropriate kit number for your charger.**
Each kit includes, the base, and cross members for heat sink and transformer.

If, 11-inch distance between transformer brackets	If, 15-inch distance between transformer brackets, and if there are three (3) heat sink extrusions.
X225-99-3-11	X225-99-3-15

Note: The illustration below identifies the **location** of some important components in standard chargers. The component P/N may vary from charger to charger. (For a P/N, refer to the 'Replacement Parts' tables).

ITEM #	DESCRIPTION
1	Cabinet, Base
2	Cabinet, Right side
3	Cabinet, Left side
4	Cabinet, Top/Back
5	Upright
6	Cross Member, Main Transformers
7	Main Transformer
8	Heat Sink Assembly
9	Modules
10	Buss bar
11	Cross Member, Heat Sink
12	PC Board Fuses
13	Shunt
14	DC Fuse
15	Terminal Board Primary, Main Transformer
15	Terminal Board Primary, Main Transformer
16	Panel, Sub-assembly
17	AC Block / Input Fuses
18	Door
19	Ground Lug
20	DC output cables and clamp
W-1	Wire Group, Primary Voltage
W-2	Wire Group, PC Board
W-3	Cable Connecting Heat Sink & Shunt

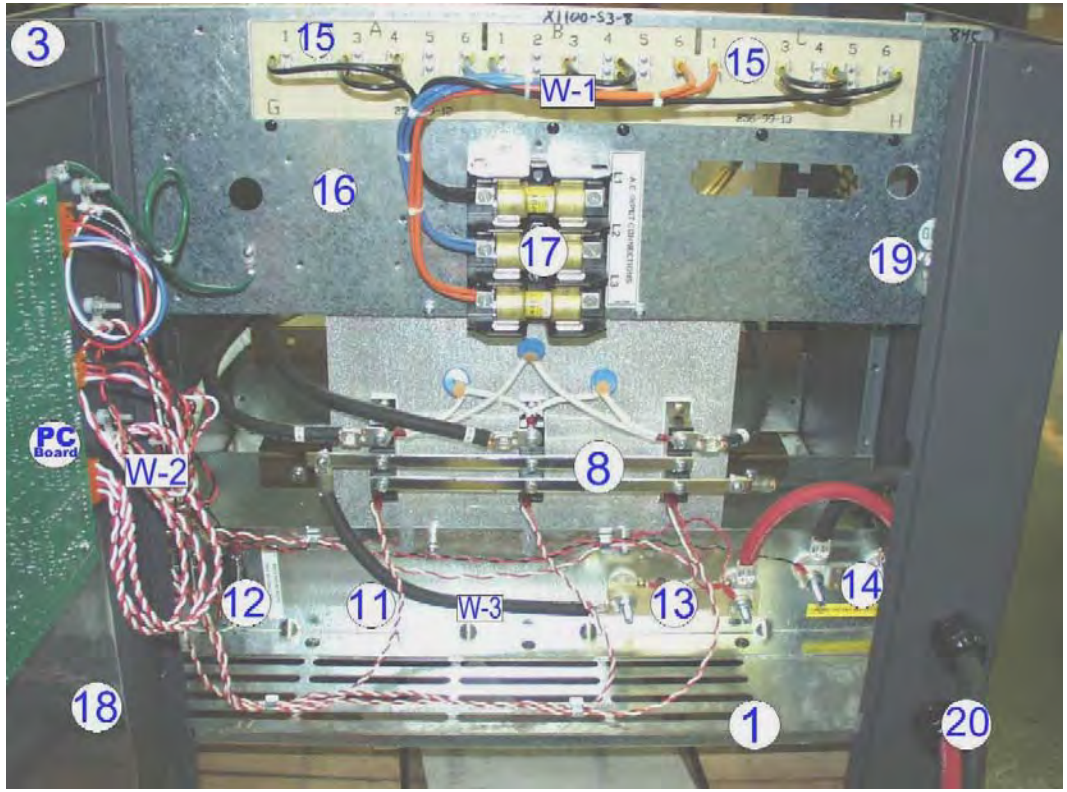

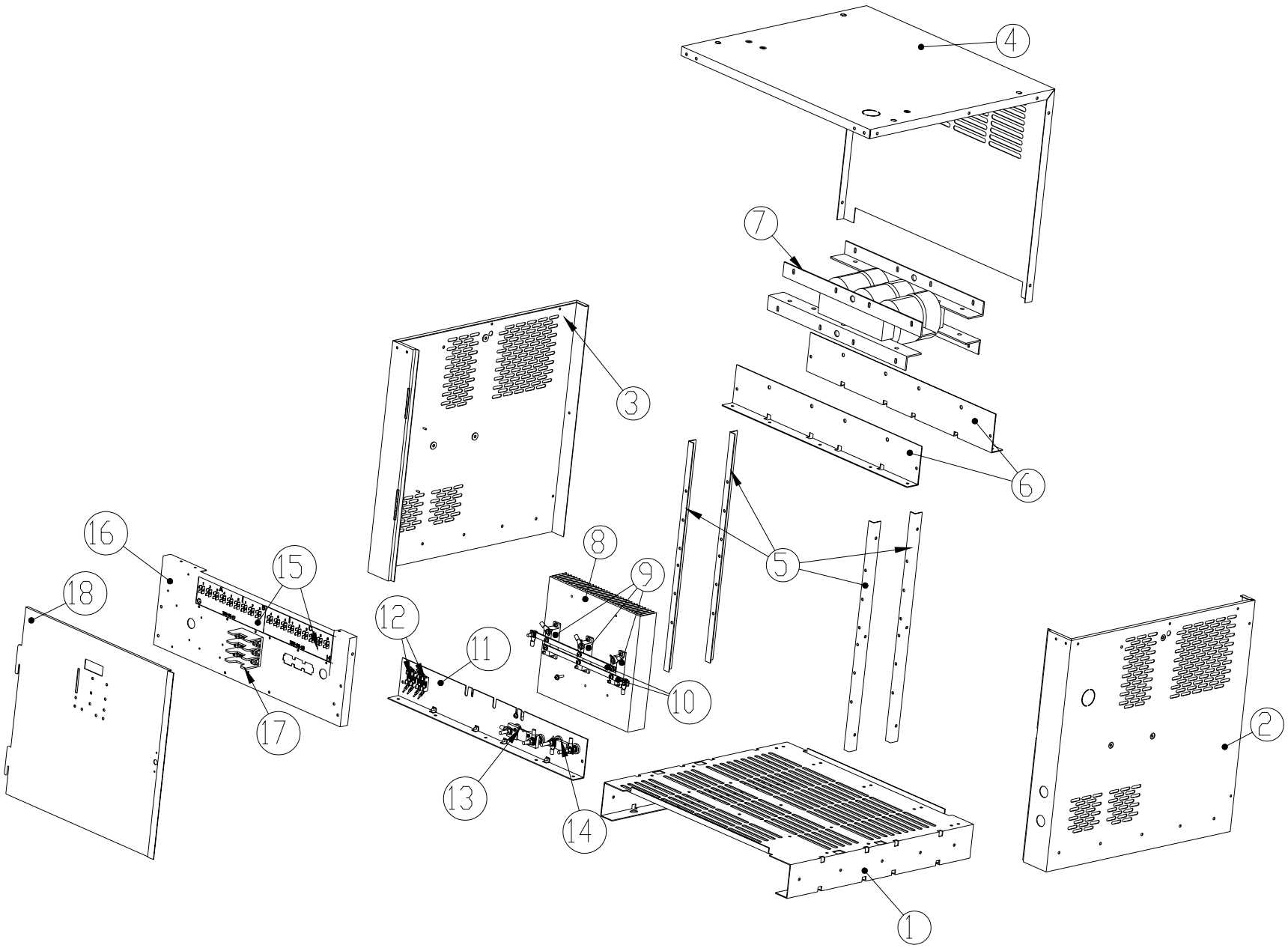
4
7
3
6
5
16
15
18
8
9
12
11
10
17
13
14
2
1

SHUNT & DC FUSES

Shunt		
Ampere-hours	**Value**	**Part Number**
0 - 680	150	X117-99-2
681-1200	300	X117-99-1
1201 & UP	2 X 300	X117-99-1

Dc fuse		
Ampere-hours	**Value**	**Part Number**
380	100	X014-11-2
450 - 680	150	X014-11-3
750 - 850	200	X014-11-9
950 - 1050	250	X014-11-16
1200	300	X014-11-17
1500	350	X014-11-13
1700	400	X014-11-14
2000	2 x 250	2X (X014-11-16)

AC INPUT & FUSES

Special Models

NOTE: special charger models might not be listed in these tables. However, AC input is listed on the charger's nameplate.
AC fuse-values are listed on a decal inside the charger. The AC fuse part number would be: X014-99-X

X=AC fuse value

Replacement part numbers for chargers with letter codes "T", "W", "X", and "Y" shall be referred to the charger's tables with code letter "B"

Volt Model B (208/240/480 V.)

3 Phase, Model B									
Model	AC FUSES								
	208 Volts			240 Volts			480 Volts		
	I AC	Value	P/N	I AC	Value	P/N	I AC	Value	P/N
6-550	7	12	X014-99-12	6	10	X014-99-10	3	5	X014-99-5
6-680	8	12	X014-99-12	7	12	X014-99-12	4	7	X014-99-7
6-750	9	15	X014-99-15	8	12	X014-99-12	4	7	X014-99-7
6-850	10	15	X014-99-15	9	15	X014-99-15	5	8	X014-99-8
6-950	11	20	X014-99-20	10	15	X014-99-15	5	8	X014-99-8
6-1050	12	20	X014-99-20	11	20	X014-99-20	6	10	X014-99-10
12-550	13	20	X014-99-20	11	20	X014-99-20	6	10	X014-99-10
12-680	16	25	X014-99-25	14	25	X014-99-25	7	12	X014-99-12
12-750	17	30	X014-99-30	15	25	X014-99-25	8	12	X014-99-12
12-850	20	35	X014-99-35	17	30	X014-99-30	9	15	X014-99-15
12-950	22	35	X014-99-35	19	30	X014-99-30	10	15	X014-99-15
12-1050	24	40	X014-99-40	21	35	X014-99-35	11	20	X014-99-20
12-1200	28	45	X014-99-45	24	40	X014-99-40	12	20	X014-99-20
18-550	19	30	X014-99-30	17	30	X014-99-30	9	15	X014-99-15
18-680	24	40	X014-99-40	20	35	X014-99-35	10	15	X014-99-15
18-750	26	40	X014-99-40	22	35	X014-99-35	11	20	X014-99-20
18-850	29	45	X014-99-45	25	40	X014-99-40	13	20	X014-99-20
18-950	33	50	X014-99-50	28	45	X014-99-45	14	25	X014-99-25
18-1050	36	60	X014-99-60	31	50	X014-99-50	16	25	X014-99-25
18-1200	41	60	X014-99-60	36	60	X014-99-60	18	30	X014-99-30
18-1500	51	80	X014-99-80	44	70	X014-99-70	22	35	X014-99-35
18-1700	58	90	X014-99-90	50	80	X014-99-80	25	40	X014-99-40
18-2000	68	100	X014-99-100	59	90	X014-99-90	30	50	X014-99-50
24-200	10	15	X014-99-15	8	12	X014-99-12	4	7	X014-99-7
24-550	25	40	X014-99-40	22	35	X014-99-35	11	20	X014-99-20
24-680	31	50	X014-99-50	27	45	X014-99-45	14	25	X014-99-25
24-750	34	50	X014-99-50	30	50	X014-99-50	15	25	X014-99-25
24-850	39	60	X014-99-60	34	50	X014-99-50	17	30	X014-99-30
24-950	43	70	X014-99-70	38	60	X014-99-60	19	30	X014-99-30
24-1050	48	70	X014-99-70	42	60	X014-99-60	21	35	X014-99-35
24-1200	55	80	X014-99-80	47	70	X014-99-70	24	40	X014-99-40
24-1500	68	100	X014-99-100	59	90	X014-99-90	30	50	X014-99-50
36-550	38	60	X014-99-60	33	50	X014-99-50	17	30	X014-99-30
36-680	47	70	X014-99-70	40	60	X014-99-60	20	35	X014-99-35
36-750	51	80	X014-99-80	44	70	X014-99-70	22	35	X014-99-35
36-850	58	90	X014-99-90	50	80	X014-99-80	25	40	X014-99-40
36-1050	72	100	X014-99-100	62	90	X014-99-90	31	50	X014-99-50
40-550	42	60	X014-99-60	36	60	X014-99-60	18	30	X014-99-30
40-680	52	80	X014-99-80	45	70	X014-99-70	23	40	X014-99-40
40-750	57	90	X014-99-90	49	70	X014-99-70	25	40	X014-99-40
40-850	64	100	X014-99-100	56	90	X014-99-90	28	45	X014-99-45
40-1050	N/A	N/A	N/A	69	100	X014-99-100	35	50	X014-99-50

Volt Model J (480/550/600V.)

3 Phase, Model J									
Model	AC FUSES								
	480 Volts			550 Volts			600 Volts		
	I AC	Value	P/N	I AC	Value	P/N	I AC	Value	P/N
6-550	3	5	X014-99-5	3	5	X014-99-5	3	5	X014-99-5
6-680	4	7	X014-99-7	3	5	X014-99-5	3	5	X014-99-5
6-750	4	7	X014-99-7	4	7	X014-99-7	3	5	X014-99-5
6-850	5	8	X014-99-8	4	7	X014-99-7	4	7	X014-99-7
6-950	5	8	X014-99-8	5	8	X014-99-8	4	7	X014-99-7
6-1000	5	8	X014-99-8	5	8	X014-99-8	4	7	X014-99-7
6-1050	6	10	X014-99-10	5	8	X014-99-8	5	8	X014-99-8
12-550	6	10	X014-99-10	5	8	X014-99-8	5	8	X014-99-8
12-680	7	12	X014-99-12	6	10	X014-99-10	6	10	X014-99-10
12-750	8	12	X014-99-12	7	12	X014-99-12	6	10	X014-99-10
12-850	9	15	X014-99-15	8	12	X014-99-12	7	12	X014-99-12
12-950	10	15	X014-99-15	9	15	X014-99-15	8	12	X014-99-12
12-1000	10	15	X014-99-15	9	15	X014-99-15	8	12	X014-99-12
12-1050	11	20	X014-99-20	9	15	X014-99-15	9	15	X014-99-15
12-1200	12	20	X014-99-20	11	20	X014-99-20	10	15	X014-99-15
18-550	9	15	X014-99-15	8	12	X014-99-12	7	12	X014-99-12
18-680	10	15	X014-99-15	9	15	X014-99-15	8	12	X014-99-12
18-750	11	20	X014-99-20	10	15	X014-99-15	9	15	X014-99-15
18-850	13	20	X014-99-20	11	20	X014-99-20	10	15	X014-99-15
18-950	14	25	X014-99-25	13	20	X014-99-20	12	20	X014-99-20
18-1000	15	25	X014-99-25	13	20	X014-99-20	12	20	X014-99-20
18-1050	16	25	X014-99-25	14	25	X014-99-25	13	20	X014-99-20
18-1200	18	30	X014-99-30	16	25	X014-99-25	15	25	X014-99-25
18-1500	22	40	X014-99-40	20	40	X014-99-40	18	35	X014-99-35
18-1600	24	40	X014-99-40	21	40	X014-99-40	19	35	X014-99-35
18-1700	25	40	X014-99-40	22	40	X014-99-40	20	35	X014-99-35
18-2000	30	50	X014-99-50	26	40	X014-99-40	24	40	X014-99-40
24-550	11	20	X014-99-20	10	15	X014-99-15	9	15	X014-99-15
24-680	14	25	X014-99-25	12	20	X014-99-20	11	20	X014-99-20
24-750	15	25	X014-99-25	13	20	X014-99-20	12	20	X014-99-20
24-850	17	30	X014-99-30	15	25	X014-99-25	14	25	X014-99-25
24-950	19	30	X014-99-30	17	30	X014-99-30	15	25	X014-99-25
24-1000	20	35	X014-99-35	18	30	X014-99-30	16	25	X014-99-25
24-1050	21	35	X014-99-35	18	30	X014-99-30	17	30	X014-99-30
24-1200	24	40	X014-99-40	21	35	X014-99-35	19	30	X014-99-30
24-1500	30	50	X014-99-50	26	40	X014-99-40	24	40	X014-99-40
36-450	14	25	X014-99-25	12	20	X014-99-20	11	20	X014-99-20
36-550	17	30	X014-99-30	15	25	X014-99-25	13	20	X014-99-20
36-680	20	35	X014-99-35	18	30	X014-99-30	16	25	X014-99-25
36-750	22	35	X014-99-35	20	35	X014-99-35	18	30	X014-99-30
36-850	25	40	X014-99-40	22	35	X014-99-35	20	35	X014-99-35
36-1000	30	50	X014-99-50	26	40	X014-99-40	24	40	X014-99-40
36-1050	31	50	X014-99-50	27	45	X014-99-45	25	40	X014-99-40
40-450	15	25	X014-99-25	13	20	X014-99-20	12	20	X014-99-20
40-550	18	30	X014-99-30	16	25	X014-99-25	15	25	X014-99-25
40-680	23	40	X014-99-40	20	35	X014-99-35	18	30	X014-99-30
40-750	25	40	X014-99-40	22	35	X014-99-35	20	35	X014-99-35
40-850	28	45	X014-99-45	25	40	X014-99-40	23	40	X014-99-40
40-1000	33	50	X014-99-50	29	45	X014-99-45	27	45	X014-99-45
40-1050	35	50	X014-99-50	30	50	X014-99-50	28	45	X014-99-45

Volt Model D (220/380/440 V.)

3 Phase, Model D									
Model	AC FUSES								
	220 Volts			380 Volts			440 Volts		
	I AC	Value	P/N	I AC	Value	P/N	I AC	Value	P/N
6-550	6	10	X014-99-10	4	7	X014-99-7	3	5	X014-99-5
6-680	8	12	X014-99-12	5	8	X014-99-8	4	7	X014-99-7
6-750	8	12	X014-99-12	5	8	X014-99-8	4	7	X014-99-7
6-850	10	15	X014-99-15	6	10	X014-99-10	5	8	X014-99-8
6-950	11	20	X014-99-20	6	10	X014-99-10	6	10	X014-99-10
6-1000	11	20	X014-99-20	7	12	X014-99-12	6	10	X014-99-10
6-1050	12	20	X014-99-20	7	12	X014-99-12	6	10	X014-99-10
12-550	12	20	X014-99-20	7	12	X014-99-12	6	10	X014-99-10
12-680	15	25	X014-99-25	9	15	X014-99-15	8	12	X014-99-12
12-750	16	25	X014-99-25	10	15	X014-99-15	8	12	X014-99-12
12-850	19	30	X014-99-30	11	20	X014-99-20	10	15	X014-99-15
12-950	21	35	X014-99-35	12	20	X014-99-20	11	20	X014-99-20
12-1000	22	35	X014-99-35	13	20	X014-99-20	11	20	X014-99-20
12-1050	23	40	X014-99-40	13	20	X014-99-20	12	20	X014-99-20
12-1200	26	40	X014-99-40	15	25	X014-99-25	13	20	X014-99-20
18-550	18	30	X014-99-30	11	20	X014-99-20	9	15	X014-99-15
18-680	22	35	X014-99-35	13	20	X014-99-20	11	20	X014-99-20
18-750	24	40	X014-99-40	14	25	X014-99-25	12	20	X014-99-20
18-850	28	45	X014-99-45	16	25	X014-99-25	14	25	X014-99-25
18-950	31	50	X014-99-50	18	30	X014-99-30	16	25	X014-99-25
18-1000	32	50	X014-99-50	19	30	X014-99-30	16	25	X014-99-25
18-1050	34	50	X014-99-50	20	35	X014-99-35	17	30	X014-99-30
18-1200	39	60	X014-99-60	23	40	X014-99-40	20	35	X014-99-35
18-1500	48	70	X014-99-70	28	45	X014-99-45	24	40	X014-99-40
18-1600	52	80	X014-99-80	30	50	X014-99-50	26	40	X014-99-40
18-1700	55	80	X014-99-80	32	50	X014-99-50	28	45	X014-99-45
18-2000	64	100	X014-99-100	38	60	X014-99-60	32	50	X014-99-50
24-550	24	40	X014-99-40	14	25	X014-99-25	12	20	X014-99-20
24-680	30	50	X014-99-50	17	30	X014-99-30	15	25	X014-99-25
24-750	32	50	X014-99-50	19	30	X014-99-30	16	25	X014-99-25
24-850	37	60	X014-99-60	21	35	X014-99-35	19	30	X014-99-30
24-950	41	60	X014-99-60	24	40	X014-99-40	21	35	X014-99-35
24-1000	43	70	X014-99-70	25	40	X014-99-40	22	35	X014-99-35
24-1050	45	70	X014-99-70	26	40	X014-99-40	23	40	X014-99-40
24-1200	52	80	X014-99-80	30	50	X014-99-50	26	40	X014-99-40
24-1500	64	100	X014-99-100	38	60	X014-99-60	32	50	X014-99-50
36-450	29	45	X014-99-45	17	30	X014-99-30	15	25	X014-99-25
36-550	36	60	X014-99-60	21	35	X014-99-35	18	30	X014-99-30
36-680	44	70	X014-99-70	26	40	X014-99-40	22	35	X014-99-35
36-750	48	70	X014-99-70	28	45	X014-99-45	24	40	X014-99-40
36-850	55	80	X014-99-80	32	50	X014-99-50	28	45	X014-99-45
36-1000	64	100	X014-99-100	38	60	X014-99-60	32	50	X014-99-50
36-1050	68	100	X014-99-100	39	60	X014-99-60	34	50	X014-99-50
40-450	32	50	X014-99-50	19	30	X014-99-30	16	25	X014-99-25
40-550	40	60	X014-99-60	23	40	X014-99-40	20	35	X014-99-35
40-680	49	70	X014-99-70	28	45	X014-99-45	25	40	X014-99-40
40-750	54	80	X014-99-80	31	50	X014-99-50	27	45	X014-99-45
40-850	61	90	X014-99-90	35	50	X014-99-50	31	50	X014-99-50
40-1000	72	100	X014-99-100	42	60	X014-99-60	36	60	X014-99-60
40-1050	75	100	X014-99-100	44	70	X014-99-70	38	60	X014-99-60

Output Cable Replacement

Charger Cable Size

Charger AH. Rating	Standard Cable Ga.
0 - 775	#2
776 - 1050	1/0
1051 - 1200	2/0
1201 - 1500	3/0
1501 - 2000	4/0

Replacement kits

CABLE GAUGE	KIT FOR SB 175 CONNECTOR	KIT FOR SB 350 CONNECTOR
#2	X225-#2-175	X225-#2-350
1/0	X225-1/0-175	X225-1/0-350
2/0	N/A	X225-2/0-350
3/0	N/A	X225-3/0-350

Cable kits above are nine feet (9') long. For longer cable two more lengths are available: twenty feet (20'), and thirty feet (30'). Example part numbers: **X225-2/0-350-20** for twenty feet of cable; or **X225-2/0-350-30** for thirty feet of cable.

NOTE: Cable kits do not include the connector housing, only the contact. Select desired connector housing below.

Connector Housing Part Numbers

CONNECTOR PART NUMBER	DESCRIPTION	Cable Size	CONNECTOR PART NUMBER	DESCRIPTION	Cable Size
05804	EC CHR HALF	#2 - 2/0	06340	SBX350 GRAY	#2 - 4/0
06316	SB175 3 POLE	#2 - 1/0	06341	SBX350 BLUE	#2 - 4/0
06320	SB350 GRAY	#2 - 4/0	06342	SBX350 RED	#2 - 4/0
06321	SB350 BLUE	#2 - 4/0	06343	SBX350 GREEN	#2 - 4/0
06322	SB350 RED	#2 - 4/0	06359	SBX350 BLACK	#2 - 4/0
06323	SB350 YELLOW	#2 - 4/0	06360	SBX350 YELLOW	#2 - 4/0
06324	SB350 GREEN	#2 - 4/0	06370	SBX175 GRAY	#2 - 1/0
06325	SB175 GRAY	#2 - 1/0	06371	SBX175 BLUE	#2 - 1/0
06326	SB175 BLUE	#2 - 1/0	06372	SBX175 ORANGE	#2 - 1/0
06327	SB175 ORANGE	#2 - 1/0	06373	SBX175 YELLOW	#2 - 1/0
06328	SB175 YELLOW	#2 - 1/0	06378	SBX175 RED	#2 - 1/0
06329	SB175 RED	#2 - 1/0	07205	YC RECEPTACLE	#2 - 3/0

When ordering replacement cables:

1. Determine cable size and length (9', 20', or 30').
2. Determine kit part number by connector type (SB175 or SB350).
3. Determine connector housing part number.

Example: A charger requiring **twenty feet (20')** of **2/0AWG Ga**. cables and a **SB350 RED** connector; the part numbers to order are:

1. **X225-2/0-350-20**
2. 06322

SCHEMATIC, 3 PHASE

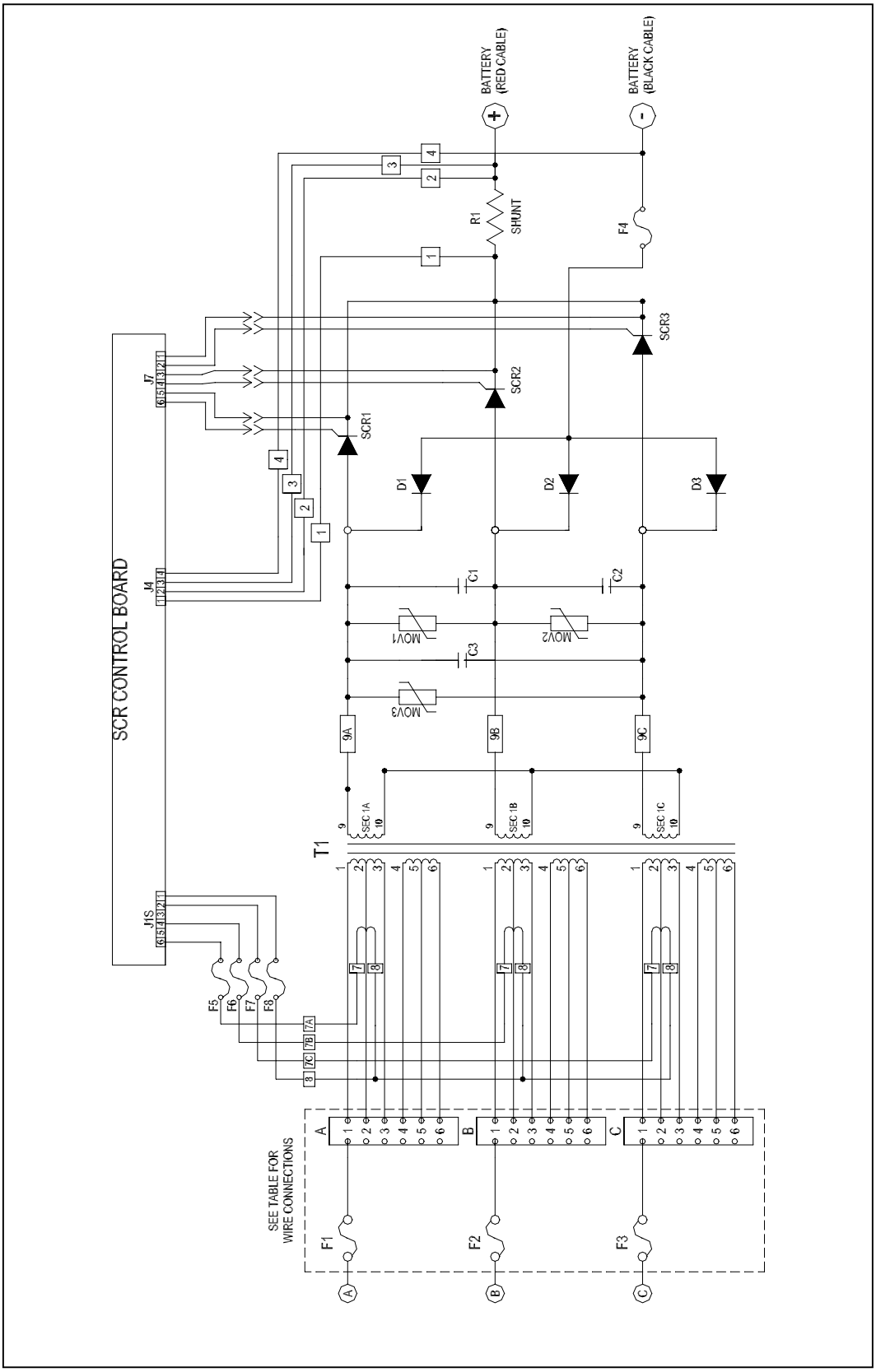

MAINTENANCE LOG

1. Modifications to Factory Settings

Date	Variable	Change	Service Technician

2. Service

Date	Description	Service Technician

TAYLOR - DUNN

CHARGER SUPPLEMENT
ENERSYS EF3-24-600D AND EF1-24-600D

NOTE: The information contained in the following pages was obtained from the charger manufacturer
Contact the manufacturer for questions or more information.

Refer to manufacturers web site for contact information: www.enersysmp.com/

Owner's Manual

Ferroresonant Transformer Type

EnForcer™ Ferro
I.B. 1552
REV: A

To be automatically connected to your closest Service Center, call us toll-free at:
1-800-ENERSYS (1-800-363-7797)
Or, visit us at: http://www.enersys.com/

Model:	S/N:	AC Input Voltage:
Installed by:		Date:

IMPORTANT
Read and understand your user's manual before installing, operating, or servicing this product. DO NOT DESTROY THIS BOOK

AC LINE VOLTAGE LETTER CODES

The following table describes the code letters to be used in new charger part numbers to indicate the AC line voltage(s) and AC line frequency at which the charger can be operated.

Code Letters	Voltage(s) (volts rms.)	Line Frequency (Hz)	Comments
B	208/240/480	60	Applicable to all charger families; single or three phase chargers.
A	120/208/240	60	Applicable to all charger families; single phase chargers only.
D	220/380/440	50	Applicable to all charger families; single or three phase chargers.
J	480/550/600	60	Applicable to all charger families; single or three phase chargers.
T*	208	60	Use only for special designs; single or three phase.
W*	240	60	Use only for special designs; single or three phase.
X*	240/480	60	Use only for special designs; single or three phase.
Y*	480	60	Use only for special designs; single or three phase.
	SPECIAL VOLTAGES	UNSPECIFIED	Use only for special designs; Contact the plant for further information.
* Replacement part numbers for chargers with such letter codes shall be referred to the charger's tables with code letter "B"			

SPECIALTY CHARGER OPTIONS LIST

Check items included (✓)

✓	Suffix	Description	Kit part #**	
	C6	6' of #10AWG AC Cord with 30 AMP Plug.*	(3ph) X225-77-2	(1ph) X225-77-4
	C8	8' of #10AWG AC Cord with 30 AMP Plug.*	N/A	
	C10	10' of #10AWG AC Cord with 30 AMP Plug.*	N/A	
	C12	12' of #10AWG AC Cord with 30 AMP Plug.*	N/A	
	CF	10' of #8AWG AC Cord with 50 AMP Plug.*	N/A	
	CF12	12' of #8AWG AC Cord with 50 AMP Plug.*	N/A	
	CR	6' of #10AWG AC Cord with 30 AMP Plug and 30AMP receptacle.*	(3ph) X225-77-1	(1ph) X225-77-3
	D	Charger with AC Disconnect Switch.		
	HD3	6' of #10AWG AC Cord with 30 AMP Plug.*	(3ph) X225-77-2	(1ph) X225-77-4
	HD4	6' of #10AWG AC Cord with 30 AMP Plug and Receptacle.*	(3ph) X225-77-1	(1ph) X225-77-3
	L13	13' of DC cable.	See OUTPUT CABLE	
	L15	15' of DC cable.	See OUTPUT CABLE	
	L18	18' of DC cable.	See OUTPUT CABLE	
	L20	20' of DC cable.	See OUTPUT CABLE	
	L25	25' of DC cable.	See OUTPUT CABLE	
	L30	30' of DC cable.	See OUTPUT CABLE	
	P	Parallel DC cables, standard size.	N/A	
	PP	Charger shipped on a Plastic Pallet	N/A	
	Q	AC input change Quick Tap™	N/A	
	S	Series DC cables	N/A	
	T	Block Out Timer switch.		
	WF	Ferro Charger with WaterGenius P/N 1003 position front		
	WFB	Ferro Charger with WaterGenius P/N 1003 position front, DC cables through bottom.		
	WR	Ferro Charger with WaterGenius P/N 1006 position right		
	WGF	Ferro Charger with WaterGenius P/N 1006 position front (door)		
		Stacking Hardware Kit**	X225-99-0-2	
		Wall Mounting Brackets**	X225-99-0-1	
*When AC cord is installed at the factory only one input voltage is marked on the charger. **Accessories				

Note: refer specialty charger part numbers to the standard models contained in this manual.

TABLE OF CONTENTS

IMPORTANT SAFETY INSTRUCTIONS

1) This manual contains important safety and operating instructions. Before using the battery charger, read all instructions, cautions, and warnings on the battery charger, the battery, and the product using the battery.
2) These chargers are designed to charge industrial flooded lead-acid batteries.
3) Read and understand all setup and operating instructions before using the battery charger to prevent damage to the battery and to the charger.
4) Do not touch non-insulated parts of the output connector or the battery terminals to prevent electrical shock.
5) During charge, batteries product hydrogen gas, which can explode if ignited. Never smoke, use an open flame, or create sparks in the vicinity of the battery. Ventilate well when the battery is in an enclosed space.
6) Do not connect or disconnect the battery plug while the charger is on. Doing so will cause arcing and burning of the connector resulting in charger damage or battery explosion.
7) Lead-acid batteries contain sulfuric acid, which causes burns. Do not get in eyes, on skin, or on clothing. In cases of contact with eyes, flush immediately with clean water for 15 minutes. Seek medical attention immediately.
8) Only factory qualified personnel can service this equipment. For service, contact the nearest EnerSys Battery authorized representative at: 1-866-443-9433.
9) De-energize all AC and DC power connections before servicing the charger.
10) This charger is not for outdoor use.
11) Do not expose the charger to moisture. Operating conditions should be 0° to 104°F; 0 to 70% relative humidity.
12) Do not operate the charger if it has been dropped, received a sharp hit, or otherwise damaged in any way.
13) For continued protection and to reduce the risk of fire, install chargers on a floor of non-combustible material such as stone, brick, or grounded metal.

WARNING: The shipping pallet must be removed for proper and safe operation.

INSTRUCTIONS DE SÉCURITÉ IMPORTANTES

1. Ce manuel contient des informations et des consignes importantes pour l'installation et l'utilisation du chargeur de batteries industrielles. Avant tout emploi, il est fortement conseillé de lire l'ensemble des instructions, recommandations, et avertissements concernant le chargeur et la batterie.
2. Ce chargeur a été conçu pour la charge des batteries industrielles de type plomb-acide dites « ouverte ». (il ne peut pas être adapté pour les batteries étanches.)
3. Lisez toutes les consignes d'installation et d'utilisation avant d'employer le chargeur de batteries afin de prévenir tout dommage envers la batterie et/ou le chargeur.
4. Ne pas se mettre en contact avec les pièces sous-tension non-isolées tels que la prise de charge ou les éléments de connexion de la batterie pour empêcher tout choc électrique.
5. Pendant la charge, le dégagement d'hydrogène rend l'emploi de feu strictement interdit: « risque d'explosion ». Ne jamais fumer, employer une flamme nue ou créer d' étincelles à proximité de la batterie. Ventiler suffisamment le local de charge pour éviter toute condensation de gax dans un espace restreint.
6. Ne brancher ou débrancher la batterie que si le chargeur est à l'arrêt. Procéder ainsi permet d'eviter d'endommager la prise de charge et de causer des dommages au chargeur ou l'explosion de la batterie.
7. Les batteries d'acide qu plomb contiennent de l'acide sulfurique pouvant causer des brûlures. Eviter le contact avec les yeux, la peau ou les vêtements. Dans le cas d'un contact avec les yeux, rincer aussitôt avec de l'eau propre pendant 15 minutes et consulter un médecin immédiatement.
8. Seul le personnel qualifié par l'usine peut entretenir cet équipement.
9. Avant toute intervention d'entretien ou de réparation, il est impératif de s'assurer que le chargeur est hors tension ainsi que la batterie déconnectée du chargeur.
10. Le chargeur n'est pas conçu pour fonctionner en usage extérieur.
11. Ne pas exposez le chargeur à l'humidité. Les conditions de fonctionnement doit être comprise entre -15° et + 40°C avec une humidité relative de 0 â de 70%.
12. Ne pas mettre en fonctionnemente le chargeur s'il a reçu un choc mécanique ou tout autre dommage de quelque façon.
13. Pour une protection permanente et pour réduire le risque du feu, installez les chargeurs sur un plancher ou un matériel non-combustible tel qu'un mur plein en beton, en brique ou le acier.

TECHNICAL INFORMATION

The nameplate, located on the outside of the charger, should be used to check this application before installation.

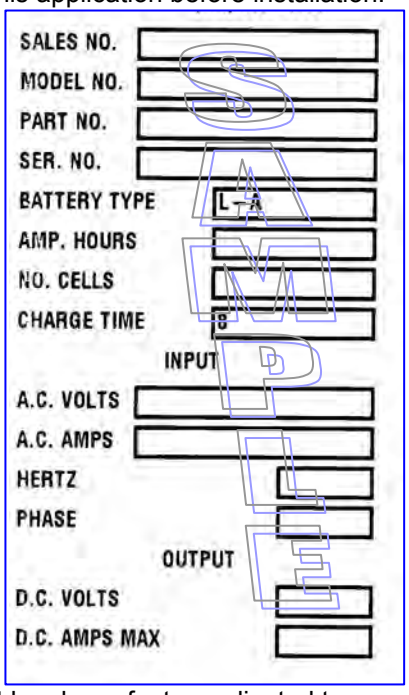

Part Number
This number specifies in general the characteristics of this particular charger and for this reason it is required in any discussion or correspondence regarding this unit.

MBP-CC-AAA(A)VOOOO

- Model type
- PC Board type
- Phase
- Cell capacity
- Ampere hour (3 - 4 digits)
- Volt code
- Option(s)

Serial Number
This number indicates complete information about the specific charger. It must be supplied with the part number on any correspondence or discussion regarding this charger.

Battery Type
The chemical content construction of the battery this unit is designed to charge is given in this part of the nameplate. (L-A = Flooded Lead-Acid)

Ampere-Hours
The information supplied here is the ampere-hour battery capacity which this unit has been factory adjusted to recharge. Charging batteries of ampere-hour capacities not specified here might cause the charger to deviate from the specifications.

Cells
This portion of the nameplate gives the number of cells this unit will charge. **This number must match exactly with any battery connected to the charger output.**

Input AC Volts
The nameplate shows the input voltage(s) accommodated by this charger.
IMPORTANT: The charger will operate only on nominal line voltages stamped on the nameplate.
Failure to select the correct voltage will result in damage to the charger and/or the battery.
The Voltage Conversion section of this manual provides jumper settings for a specific input voltage.

Input AC Amps
The external fusing and/or the line disconnect circuit breaker should be as specified in the National Electrical Code. (AC fuse values can be found on the decal inside the charger).

Hz
This gives the frequency in cycles per second of the AC input voltage. Under no conditions operate charger at a different frequency or from a generator with unstable frequency.

Phase
- Number "1" indicates a Single Phase Charger
- Number "3" indicates a Three Phase Charger.

A single phase charger can be operated from a single phase line, or from two lines of a three phase line, provided that the line voltage is correct.

DC Volts
This gives the nominal DC output voltage of the system.

Rated DC Amps
This is the nominal DC value of current that this unit will deliver to a battery that is 100% discharged.

INSTALLATION

WARNING: The shipping pallet must be removed for proper and safe operation.

Location

For maximum trouble-free service, choose a location which is free of excess moisture, dust, and corrosive fumes. Also, avoid locations where temperatures are high or where liquids will drip on the charger. Allow six (6) inches of clearance at rear and sides of the charger for air circulation. Do not obstruct the ventilating openings or the space under the charger.

Stacking Multiple Chargers

These chargers can be stacked up to a maximum of 3 units high. Chargers are not designed to be stacked side by side due to ventilation requirements.

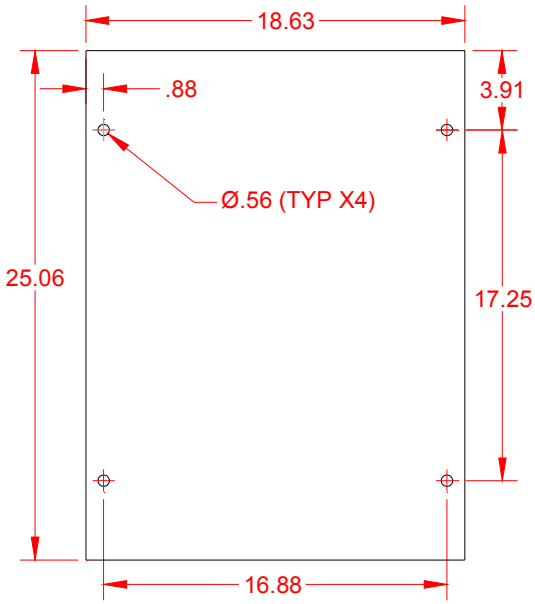

Single Phase chargers require holes drilled on the top. Use drawing template for drills.

1. Position the first charger so that a minimum of 6 inches of space is between the charger and any wall, and 12 inches between the charger and any other equipment.
2. Place the second charger on top of the first. Align the bolt holes on each charger.
3. Fasten both charger cabinets together securely using 3/8" bolts and nuts.

NOTE: the two bolts toward the back of the charger may be omitted if an after market metal strap (about 8 inches) is used to secure both chargers. Remove existing 1/4" screws of the chargers' sides and attach strap with screws. Refer to picture. Hardware kit # X225-99-0-2 can be ordered to attach two chargers.

4. Repeat steps 2 and 3 for the third charger.
5. Stacked chargers must be fastened to the wall using devices suitable for the wall construction and the bolt holes at the top of the highest charger.

NOTE: Ambient temperature at all levels cannot exceed 104°F / 40°C.

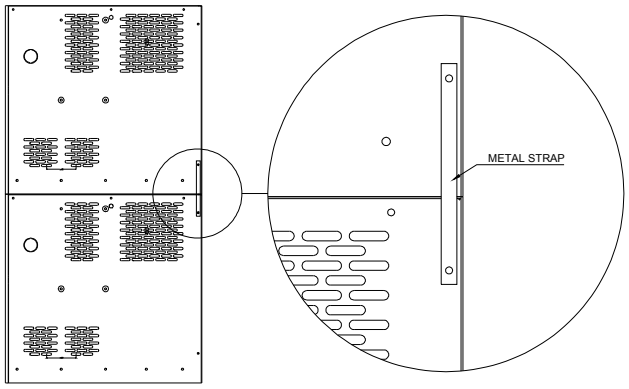

TWO STACKED CHARGERS, RIGHT SIDE VIEW

Electrical Connections

To prevent failure of the charger, be sure it is connected to the correct line voltage.

Single phase units:
Connect power to the charger as follows:
Phase A to L1 (fuse block)
Phase C to L2 (fuse block)

Three phase units:
Connect all the chargers as follows:
Phase A to L1 (fuse block)
Phase B to L2 (fuse block)
Phase C to L3 (fuse block)

Connecting Input Power

WARNING: Make sure the disconnect is in the OFF position and the battery is disconnected before connecting the input power to the terminals of the charger.

Connect the input power to the appropriate terminals, ***including ground***. Follow your local electrical or National Electric Code in making these connections.
The figure that follows shows both the top and right side installation options for routing the incoming power cable.

IMPORTANT: When the AC Disconnect Switch is factory installed connect the input power to the Switch instead the AC fuse block.

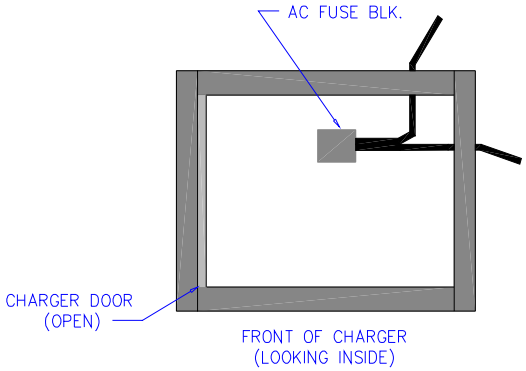

AC Disconnect

The user must provide suitable branch circuit protection and a disconnect method from the AC power supply to the charger to allow for safe servicing. (Even if the charger has an optional factory installed Disconnect Switch)

Plug Polarity

The charging cable is connected to the DC output of the charger with the positive lead marked RED. The output polarity of the charger must be strictly observed when connecting to the battery (read warning above). Improper connection will open the DC fuse.

Grounding the Charger

DANGER: FAILURE TO GROUND THE CHARGER COULD LEAD TO FATAL ELECTRIC SHOCK. Follow local codes or National Electric Code for ground wire sizing.

Connect a grounding conductor to the lug provided on the horizontal support panel. This lug is marked as shown:

DESCRIPTION OF OPERATION

General

This battery charger is designed to charge flooded lead-acid storage batteries only of the cell and ampere-hour rating as marked on the nameplate.

Beginning the Charging

When a battery is connected to the charger, the control board senses voltage and after a 5 second delay, the charger energizes. During this delay the **CHARGING** LED flashes.

NOTE: For ***Deluxe*** type of chargers; a programmable Auto Start delay can be set anywhere from 0 up to 25 hours. Read more about each type of charger under the heading OPERATING INSTRUCTIONS

Charging

Charging current is determined by the battery voltage and interaction of the ferroresonant charger. Charging current tapers automatically as battery voltage rises during the charge. As the battery charges, the LED bar graph will display the percentage of battery capacity.

Power Diodes

The power diodes rectify the output of the ferroresonant transformer.

AC Power Fail

The charger will not detect an AC power fault or AC fuse open. **If the AC power fails with a battery connected to the charger during a charge cycle, the charger will reset and start a new charge cycle when power is restored.**

Parallel Charging (Optional)
Available for *Deluxe* chargers only (Auto Start delay is required)
In parallel charging, batteries must have an equal number of cells and must match the charger nameplate's ratings. Ampere-Hour rating of charger must be equal to the ampere-hour of both batteries combined. Theoretically, charging current is equally divided between both batteries provided that batteries % of discharge and ages are equal. Make sure both batteries are connected before charge cycle starts.
Series Charging (Optional)
In series charging, the voltages of both batteries add up and must match charger's nameplate rating. Charger's ampere-hour rating must be equal to each of the batteries ampere-hour rating. Charge cycle will not start unless both batteries are connected.
AC Disconnect (Optional)
When an AC disconnect is installed, access to the charger through the front door is denied unless the AC disconnect is switched off. When the AC disconnect is in the off position, power is only present at the disconnect switch input terminals. Make sure that main breaker is switched off before working on the charger.
AC Input Change Quick Tap™ (Optional)
Quick Tap™ is a feature to EnerSys chargers that allows the user to change AC input easily and quickly. See the heading VOLTAGE CONVERSION for more information.

OPERATING INSTRUCTIONS

Read operating Instructions for the type of control board that matches your charger.

CONTROL BOARD

Normal Operation

1. Make sure that the battery is properly matched for the particular charger. For charger characteristics refer to the nameplate label located on the front panel of the charger. Failure to properly match charger and battery can result in damage to both.

2. Idle Mode: When AC input voltage is applied to the charger and no battery is connected, the **POWER** LED will be lit. This message will display in rotation on the front panel display:
   Conn
   Batt

3. During Idle Mode, toggling the UP or DOWN pushbuttons will display the previous charge cycle parameters. Toggle the UP or DOWN to display the total charge time, ampere-hours delivered, highest voltage during the previous charge cycle, the number of charge cycles since the last equalize and the equalize count. Only the charge count and equalize count remains in non-volatile memory. These values will be saved even when AC power is removed. The other values will remain in volatile memory until the next charge cycle begins or if AC power is removed.

4. Plug the battery connector into the charger connector. Once the battery is connected to the charger, the **START/STOP** LED will flash for approximately 5 seconds while the display shows this message:
   Strt
   ##
   Cells

   The contactor will engage and charging will begin. The **START/STOP** LED will light steadily, the LED bar graph will indicate the percent charged status of the battery and the display will now begin to show:

####.#	(Charger output current)
####	(Ampere-hours returned)
##. ##	(Time)
#.###	(Cell Voltage)

   These values are displayed in rotation for about 2 seconds each. The display can be changed so that current or voltage, or current and voltage or all the above will be displayed. The default setting is for all the above to be displayed.

CAUTION: To prevent arcing and burning at the connector and possible battery explosion, press the **START/STOP** pushbutton first to stop the charge cycle before removing a battery that is currently on charge.

5. When the battery reaches **Gassing Voltage**, the yellow **80%** LED will light.

6. When the battery is fully charged the green **CHARGE COMPLETE** LED will light, the **START/STOP** LED will extinguish and the charger will shut off. At this time the battery is at full capacity and ready for use.

Charger Features

Auto Start/Delayed Start

Auto Start enables the battery charger to start the charge cycle automatically after the battery is connected to the charger. A programmable delay can be programmed so that Auto Start will begin after a set time period. This delay can be set through the front panel display, refer to ***d-St*** in section **User Parameter Configuration**. Auto start can be delayed anywhere from 0 up to 25 hours, in one minute intervals.

Auto Equalize Cycle

An Equalize Cycle adds a predetermined amount of time to extend the battery's charge cycle. This charger is equipped with an Auto Equalize function. This is a configurable parameter, consult your service representative for more information. The factory default setting for the Auto Equalize cycle is 3 hours of charge time for every fifth charge cycle. A charge cycle consists of at least one hour of continuous charging of the battery by the charger. Every time the battery completes a charge cycle, the charge counter is incremented. When the charge counter reaches the programmed Equalize count value, an equalize cycle will occur immediately after the battery completes its normal charge cycle. When an equalize charge cycle is pending, the **EQUALIZE** LED will flash. The equalize button can be pressed at any time during the normal charge cycle to stop the pending equalize cycle. Once the battery has completed a successful charge cycle, the **Charge Complete** LED will light and the charger will immediately go into the equalize charge cycle. The **EQUALIZE** LED will then light steadily. Pressing the EQUALIZE button during the equalize charge cycle will have no effect on the charger.

Manual Equalize Cycle

With this charger, the battery can also be equalized manually. Pressing the **EQUALIZE** button at any time during the charge cycle will activate the equalize function. Once pressed, the **EQUALIZE** LED will begin to flash indicating that an equalize cycle will occur once the battery has completed a successful charge cycle. The **EQUALIZE** button can again be pressed at any time during the normal charge cycle to stop the pending equalize cycle. The **CHARGE** counter is reset every time the battery completes a successful Equalize charge cycle. Pressing the **EQUALIZE** button during the Equalize charge cycle will have no effect on the charger.

> **NOTE**: Since Equalize charging extends the recharge time, it is best to do this when additional cooling time is available (example: on a weekend). Consult your factory representative to determine Equalize intervals that meet your needs.

Refresh Cycle

If a battery remains connected to the charger for a predetermined amount of time after a charge cycle has been completed, a Refresh charge cycle will be given to the battery. The factory default setting for the Refresh Cycle is to refresh for 20 minutes every 12 hours. This is a configurable parameter, consult your service representative for more information.

Cool Down

When a battery completes a charge cycle without error, it ideally should cool down before being used. This is a configurable parameter that can be set through the front panel display, refer to ***coolL*** in section **User Parameter Configuration**. The factory default setting for the Cool Down is 1 hour.

User Parameter Configuration

Adjusting Parameter Settings
The charger's user parameters may be configured only while the charger is in idle mode. In order to do so, press the **EQUALIZE** pushbutton and hold for approximately five seconds. The display will read **USEr** and is now ready for user parameter configuration. When you release the **EQUALIZE** pushbutton the display will then read ***diSP***. For a list of available user parameters and their definitions, see the table below.

You can scroll up through the different parameters by using the **EQUALIZE** pushbutton. In order to adjust the parameters press the **UP** or **DOWN** pushbuttons. If you press and hold the **UP** or **DOWN** pushbuttons for 3 seconds when adjusting the parameters, the options will scroll through at a rapid pace. Release the pushbutton to return to normal scrolling mode. When finished adjusting parameters, press the **START/STOP** pushbutton to exit the user parameter configuration mode and save the parameter settings. The display will now read **CONN BATT**.

Parameter	Description	Range	Default
diSP	**Display mode** 3 = displays current, ampere-hours returned, charge time and battery voltage 2 = displays current and voltage only 1 = displays current only 0 = displays voltage only	0-3	3
d-St	**Delayed start** Amount of time delay after a battery is connected to the charger before charging proceeds. Increments in 1 minute intervals.	0 min - 25 hr.	.00
CooL	**Cool Down Time** Amount of time after a complete charge cycle that a battery needs to cool down before being utilized.	0 hr. - 12 hr.	1.00 hr
EU-C	**Equalize Count** Total amount of charge cycles that need to occur before an automatic equalize charge cycle will take place. (0 indicates that no Equalize charge will occur)	0 - 20 charge cycles	5 charge cycles

Default Settings
Resetting default parameters is not recommended and could seriously affect charger/battery performance. Consult your local service representative for further information on charger settings.

Charger Faults

The charger control circuitry constantly monitors for several fault conditions. If a fault should occur, the charge in progress is interrupted, and a fault message is displayed on the front panel. A list of the faults and their descriptions follow.

Displayed Fault	Description	Fault LED	Fault Clearing
dC FuSE	Occurs when the DC fuse opens because of an excess of current.	Call Service - YES Bar Graph - Flashes	Can be reset by disconnecting the battery from the charger. Replace Fuse.
OPEn batt	Occurs when a charging battery is disconnected from the charger without first stopping the charge cycle.	Call Service - NO Bar Graph - Steady On	Can be reset by connecting a battery to the charger.
t-1 Err	Occurs when the time limit to gassing voltage is exceeded.	Call Service - NO Bar Graph - Steady On	Can be reset by disconnecting the battery from the charger.
t-2 Err	Occurs when the overall charge cycle time limit is exceeded.	Call Service - NO Bar Graph - Steady On	Can be reset by disconnecting the battery from the charger.
Lo batt	Occurs when the battery is first connected and the voltage is between 1.0 and 1.8 Volts/cell.*	Call Service - NO Bar Graph - Steady On	Can be reset if battery voltage is between 1.8 and 2.4 Volts/cell
Hi batt	Occurs when the battery is first connected and the voltage is above 2.4 Volts/cell.	Call Service - NO Bar Graph - Steady On	Can be reset if battery voltage is between 1.8 and 2.4 Volts/cell
Hot batt	Occurs when there is negative change in battery voltage.	Call Service - NO Bar Graph - Steady On	Can be reset by disconnecting the battery from the charger.

* If battery voltage is below 1.0 Volt/cell, the charger will not recognize that a battery has been connected. The display will continue to read ***Conn Batt***.

VOLTAGE CONVERSION

The charger is designed to operate from nominal line voltages as marked on the nameplate. The line voltage to which the charger is to be converted **must be one of the voltages shown on the charger nameplate**.

DANGER: POWER MUST BE DISCONNECTED BEFORE CHANGING AC INPUT CONNECTIONS.

CAUTION: THERE ARE DANGEROUS VOLTAGES WITHIN THE BATTERY CHARGER CABINET.
ONLY QUALIFIED PERSONNEL SHOULD ATTEMPT TO ADJUST OR SERVICE THIS BATTERY CHARGER

AC Input change (Standard)

NOTE*: Chargers with optional Quick Tap™ please refer to* AC Input Change With Quick Tap™.

1. Change AC fuses to the value of the desired line voltage available for this charger. (AC fuse values can be found on the decal inside the charger).

2. Change jumper "L1/V" (red wire), at terminals of the Control Transformer's Primary fuse, to desired line voltage.

CAUTION: Failure to perform this step may cause the Control Trans. Primary fuse to open.

3. Change provided jumpers, on the main transformer primary tap location, as shown on the decal inside the door of the charger, or on the following charts. (Jumpers not being used are stored in the manual's envelope inside the charger).

4. Indicate the line voltage change on the decal inside the charger.

1PH. Wiring Conn. Chart

PERMANENT WIRING

WIRE	COLOR	CONNECTION
D4	ORANGE	T1 to 40

MOVABLE JUMPERS

MODEL B

WIRE	COLOR	208 VOLT INPUT CONNECTION	240 VOLT INPUT CONNECTION	480 VOLT INPUT CONNECTION
A3	BLUE	40 to 45	40 to 45	44 to 45
A3	BLUE	43 to 48	44 to 49	NOT USED
D1	GRAY	T3 to 48	T3 to 49	T3 to 49
L1/V	RED	To 208V	To 240V	To 480V

MOVABLE JUMPERS

MODEL D

WIRE	COLOR	220 VOLT INPUT CONNECTION	380 VOLT INPUT CONNECTION	440 VOLT INPUT CONNECTION
A3	BLUE	40 to 45	43 to 45	44 to 45
A3	BLUE	44 to 49	NOT USED	NOT USED
D1	GRAY	T3 to 49	T3 to 48	T3 to 49
L1/V	RED	To 220V	To 380V	To 440V

MOVABLE JUMPERS

MODEL J

WIRE	COLOR	480 VOLT INPUT CONNECTION	550 VOLT INPUT CONNECTION	600 VOLT INPUT CONNECTION
A3	BLUE	NOT USED	NOT USED	NOT USED
A3	BLUE	NOT USED	NOT USED	NOT USED
D1	GRAY	T3 to 47	T3 to 48	T3 to 49
L1/V	RED	To 480V	To 550V	To 600V

MOVABLE JUMPERS

MODEL A

WIRE	COLOR	120 VOLT INPUT CONNECTION	208 VOLT INPUT CONNECTION	240 VOLT INPUT CONNECTION
A3	BLUE	40 to 45	43 to 45	44 to 45
A3	BLUE	44 to 49	NOT USED	NOT USED
D1	GRAY	T3 to 49	T3 to 48	T3 to 49
L1/V	RED	To 120V	To 208V	To 240V
T	VIOLET	ACROSS F3	NOT USED	NOT USED

3PH. Wiring Conn. Chart

PERMANENT WIRING

WIRE	COLOR	CONNECTION
D5	RED	T1 to 40
D2	BLACK	T2 to 31

MOVABLE JUMPERS

MODEL B

WIRE	COLOR	208 VOLT INPUT CONNECTION	240 VOLT INPUT CONNECTION	480 VOLT INPUT CONNECTION
A2	BLACK	31 to 34	31 to 34	44 to 45
A2	BLACK	32 to 35	33 to 36	33 to 34
A3	BLUE	40 to 45	40 to 45	NOT USED
A3	BLUE	41 to 46	42 to 47	NOT USED
A4	ORANGE	43 to 48	44 to 49	NOT USED
A6	BROWN	35 to 46	36 to 47	36 to 45
D3	BLUE	T3 to 48	T3 to 49	T3 to 49
L1/V	RED	To 208V	To 240V	To 480V

MOVABLE JUMPERS

MODEL D

WIRE	COLOR	220 VOLT INPUT CONNECTION	380 VOLT INPUT CONNECTION	440 VOLT INPUT CONNECTION
A2	BLACK	31 to 34	33 to 34	33 to 34
A2	BLACK	33 to 36	43 to 45	44 to 45
A3	BLUE	40 to 45	NOT USED	NOT USED
A3	BLUE	42 to 47	NOT USED	NOT USED
A4	ORANGE	44 to 49	NOT USED	NOT USED
A6	BROWN	36 to 47	35 to 45	36 to 45
D3	BLUE	T3 to 49	T3 to 48	T3 to 49
L1/V	RED	To 220V	To 380V	To 440V

MOVABLE JUMPERS

MODEL J

WIRE	COLOR	480 VOLT INPUT CONNECTION	550 VOLT INPUT CONNECTION	600 VOLT INPUT CONNECTION
A6	BROWN	34 to 45	35-44	36 to 45
D3	BLUE	T3 to 47	T3 to 48	T3 to 49
L1/V	RED	To 480V	To 550V	To 600V

AC Input Change With Quick Tap™
If available

CAUTION: CONNECTOR IS KEYED AND PINS ARE FRAGILE.

1. Change AC fuses to the value of the desired line voltage available for this charger. (AC fuse values can be found on the decal inside the charger).
2. Change Quick Tap™ plug to the desired line voltage as marked under the sockets.

3. Indicate the line voltage change on the decal inside the charger.

1PH. and 3PH. Wiring Conn. Illustration

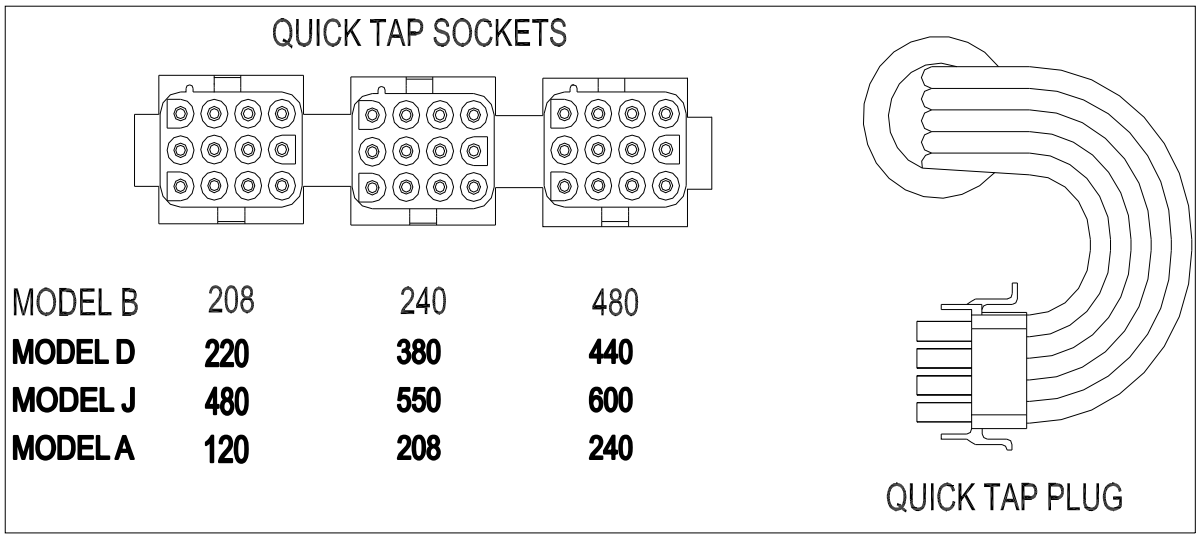

Quick Tap Wire Assembly Part Numbers

Voltage Model	1Ph. QT Part Number	3Ph. QT Part Number
B	X1106-99-F1B	X1106-99-F3B
D	X1106-99-F1D	X1106-99-F3D
J	X1106-99-F1J	X1106-99-F3J
A	X1106-99-F1A	N/A

MAINTENANCE & SERVICE

The charger requires a minimum of maintenance. Connections and terminals should be kept clean and tight. The unit should be periodically cleaned with an air hose to prevent any excessive dirt build up on components. Care should be taken not to bump or move any adjustments during cleaning. Make sure that both the AC lines and the battery are disconnected before cleaning. The frequency of this type of maintenance depends on the environment in which this unit is installed.

To be automatically connected to your closest Service Center call us toll-free at:

1-800-ENERSYS (1-800-363-7797)

Or visit us at: http://www.enersys.com/

REPLACEMENT PARTS

CIRCUIT BOARDS:

EnForcer Ferro	X1060-99-DGF-1

BASE KITS:

KIT DESCRIPTION	1PH	3PH
10" BETWEEN XMR BRACKETS	X225-99-1-10	X225-99-3-10
12" BETWEEN XFMR BRACKETS	X225-99-1-12	X225-99-3-12

SINGLE PHASE PARTS:

DESCRIPTION	PART NUMBER
DOOR	X054-99-1-6
CAPACITOR PANEL	X052-99-1-2
TERMINAL BOARD "QT-E"	256-99-11
CONTROL TRANSFORMER MODEL A	X127-99-1A

DESCRIPTION	PART NUMBER
TOP/BACK	X057-99-1-1
TERMINAL BOARD "E"	256-99-8
TERMINAL BOARD (CAPACITOR)	256-99-5

THREE PHASE PARTS

DESCRIPTION	PART NUMBER
DOOR	X054-99-3-17
BACK	X057-99-3-16
TERMINAL BOARD "A"	256-99-3
TERMINAL BOARD "C" (CAPACITOR)	256-99-6
TERMINAL BOARD "QT-A"	256-99-9
DC CABLE CLAMP (4/0)	356-5-16

DESCRIPTION	PART NUMBER
TOP	X052-99-3-12
CAPACITOR PANEL	X052-99-3-7
TERMINAL BOARD "B"	256-99-4
TERMINAL BOARD "D" (CAPACITOR)	256-99-7
TERMINAL BOARD "QT-B"	256-99-10

PARTS COMMON TO SINGLE AND THREE PHASE

DESCRIPTION	PART NUMBER
LEFT SIDE	X057-99-0-5
UPRIGHT	X052-99-0-6
LATCH RIVETS	164-8-6
TERMINAL BOARD "KTK"	256-99-1
FUSE REDUCER (<70A W/100A FUSE BLOCK)	X014-17-6
GROUND LUG	X012-7-24
CONTROL TRANSFORMER, MODEL B	X127-99-2B
CONTROL TRANSFORMER, MODEL J	X127-99-4J
FUSE, F5, "KTK" TERMINAL BOARD MODEL J	X014-34-7
CONTACTOR (40A)	X129-62-53

DESCRIPTION	PART NUMBER
RIGHT SIDE	X057-99-0-6
DOOR LATCH	X044-1-32
DC CABLE CLAMP (#2, 1/0, 2/0, 3/0)	356-5-15
TERMINAL BOARD "3AG"	256-99-16
FUSE REDUCER (<40A W/60A FUSE BLOCK)	X014-17-5
CAPACITOR BRACKET	029-99-B
CONTROL TRANSFORMER, MODEL D	X127-99-3D
FUSE, F5, "KTK" TERMINAL BOARD, MODEL B AND D	X014-34-5
FUSE F6, F7, F8 "3AG" TERMINAL BOARD	X014-7-28
CONTACTOR (60A)	X129-62-54

Note: The illustration below identifies the **location** of some important components in 1ph. and 3ph. Standard Chargers. The component P/N may vary from charger to charger. (For a P/N, refer to the 'Replacement Parts' tables).

ITEM #	DESCRIPTION
1	Control transformer
2	PC Board Fuses
3	Contactor
4	Primary fuse, Control transformer
5	Terminal Board Primary, Main Transformer
6	AC Block / Input Fuses
7	Terminal Board Primary, Main Transformer
8	Capacitor
9	Terminal Board Secondary, Main Trans.
10	Terminal Board Secondary, Main Trans.
11	Capacitor
12	Heat Sink / Rectifier Assembly
13	Shunt
14	DC Fuse
15	DC Output Cables & DC Cable Clamp
16	Panel, Sub-assembly
17	Panel, Capacitor
18	Cross Member, Heat Sink
19	Cabinet, Base
20	Cabinet, Right side
21	Cabinet, Top/Back
22	Door
23	Cabinet, Left side
24	Main Transformer, Teaser
25	Main Transformer, Primary
26	Cross Member, Main Transformers
27	Upright
28	Ground Lug
29	Brackets, Capacitors
W-1	Wire Group, Primary Voltage
W-2	Wire Group, Capacitors
W-3	Wire Group, PC Board
W-4	Cable Connecting Heat Sink & Shunt

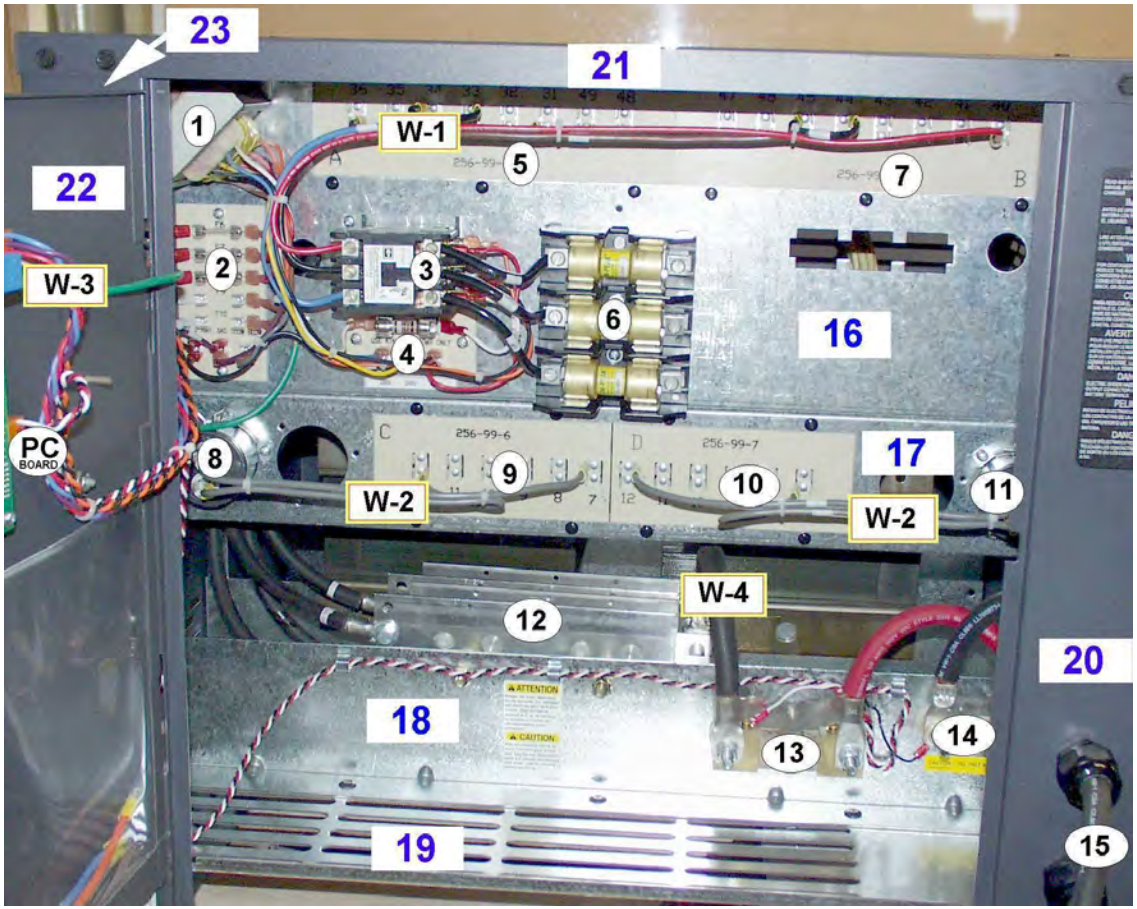

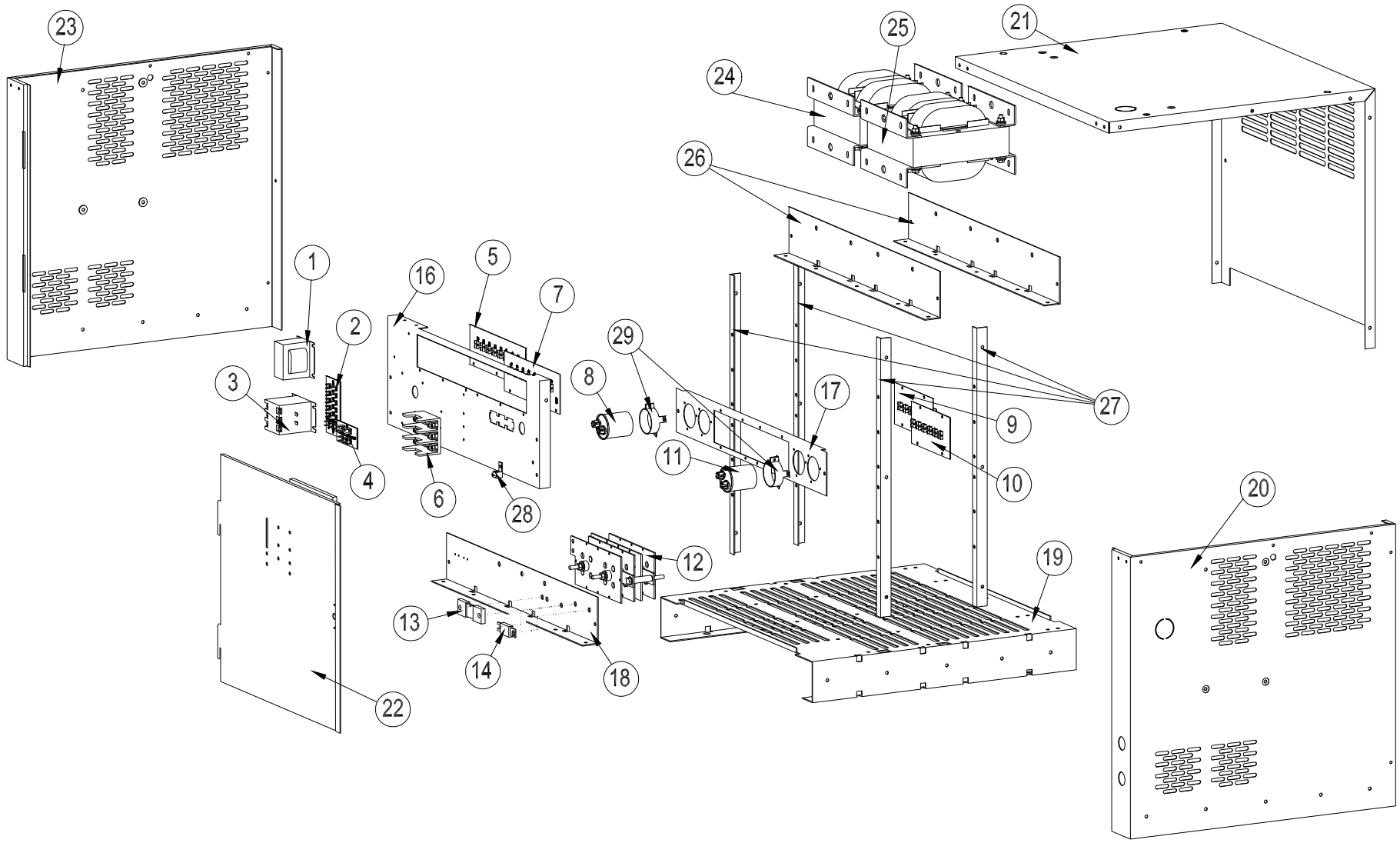
23
25
21
24
26
1
16
5
7
2
29
3
8
17
27
9
11
10
4
6
28
20
12
19
13
14
18
22

Replacement part numbers for chargers with letter codes "T", "W", "X", and "Y" shall be referred to the charger's tables with code letter "B"

AC Input & Fuses

3PH., Volt Model B (208/240/480 V.)

3 Phase; Model B									
Model	AC FUSES								
	208 Volts			240 Volts			480 Volts		
	I AC	Value	P/N	I AC	Value	P/N	I AC	Value	P/N
6-550	5.3	10	X014-99-10	4.6	10	X014-99-10	2.3	6	X014-99-6
6-600	5.8	12	X014-99-12	5.0	10	X014-99-10	2.5	6	X014-99-6
6-775	7.5	15	X014-99-15	6.5	12	X014-99-12	3.3	6	X014-99-6
6-865	8.4	15	X014-99-15	7.3	15	X014-99-15	3.6	8	X014-99-8
6-1050	10.2	20	X014-99-20	8.8	20	X014-99-20	4.4	8	X014-99-8
12-380	7.4	15	X014-99-15	6.4	12	X014-99-12	3.2	6	X014-99-6
12-550	10.6	20	X014-99-20	9.2	20	X014-99-20	4.6	10	X014-99-10
12-680	13.2	25	X014-99-25	11.4	20	X014-99-20	5.7	10	X014-99-10
12-775	15.0	30	X014-99-30	13.0	25	X014-99-25	6.5	12	X014-99-12
12-865	16.7	30	X014-99-30	14.5	30	X014-99-30	7.3	15	X014-99-15
12-960	18.6	35	X014-99-35	16.1	30	X014-99-30	8.1	15	X014-99-15
12-1050	20.3	40	X014-99-40	17.6	35	X014-99-35	8.8	20	X014-99-20
12-1200	23.2	45	X014-99-45	20.1	40	X014-99-40	10.1	20	X014-99-20
18-380	11.0	20	X014-99-20	9.6	20	X014-99-20	4.8	10	X014-99-10
18-450	13.1	25	X014-99-25	11.3	20	X014-99-20	5.7	10	X014-99-10
18-550	16.0	30	X014-99-30	13.8	25	X014-99-25	6.9	15	X014-99-15
18-600	17.4	35	X014-99-35	15.1	30	X014-99-30	7.6	15	X014-99-15
18-680	19.8	35	X014-99-35	17.1	30	X014-99-30	8.6	15	X014-99-15
18-775	22.5	40	X014-99-40	19.5	35	X014-99-35	9.8	20	X014-99-20
18-865	25.1	45	X014-99-45	21.8	40	X014-99-40	10.9	20	X014-99-20
18-960	27.9	50	X014-99-50	24.2	45	X014-99-45	12.1	25	X014-99-25
18-1050	30.5	60	X014-99-60	26.4	50	X014-99-50	13.2	25	X014-99-25
18-1200	34.9	70	X014-99-70	30.2	60	X014-99-60	15.1	35	X014-99-35
18-1500	43.6	80	X014-99-80	37.8	70	X014-99-70	18.9	35	X014-99-35
18-1700	49.4	100	X014-99-100	42.8	80	X014-99-80	21.4	40	X014-99-40
24-450	17.4	35	X014-99-35	15.1	30	X014-99-30	7.6	15	X014-99-15
24-550	21.3	40	X014-99-40	18.5	35	X014-99-35	9.2	20	X014-99-20
24-600	23.2	45	X014-99-45	20.1	40	X014-99-40	10.1	20	X014-99-20
24-680	26.3	50	X014-99-50	22.8	40	X014-99-40	11.4	20	X014-99-20
24-775	30.0	60	X014-99-60	26.0	50	X014-99-50	13.0	25	X014-99-25
24-865	33.5	60	X014-99-60	29.0	60	X014-99-60	14.5	30	X014-99-30
24-960	37.2	70	X014-99-70	32.2	60	X014-99-60	16.1	35	X014-99-35
24-1050	40.7	80	X014-99-80	35.2	70	X014-99-70	17.6	35	X014-99-35
36-380	22.1	40	X014-99-40	19.1	35	X014-99-35	9.6	20	X014-99-20
36-450	26.1	50	X014-99-50	22.7	40	X014-99-40	11.3	20	X014-99-20
36-550	31.9	60	X014-99-60	27.7	50	X014-99-50	13.8	25	X014-99-25
36-600	34.9	70	X014-99-70	30.2	60	X014-99-60	15.1	35	X014-99-35

1PH., Volt Model B (208/240/480 V.)

1 Phase; Model B									
Model	AC FUSES								
	208 Volts			240 Volts			480 Volts		
	I AC	Value	P/N	I AC	Value	P/N	I AC	Value	P/N
6-225	3.8	8	X014-99-8	3.3	6	X014-99-6	1.6	3	X014-99-3
6-380	6.4	12	X014-99-12	5.5	10	X014-99-10	2.8	6	X014-99-6
6-450	7.5	15	X014-99-15	6.5	12	X014-99-12	3.3	6	X014-99-6
6-550	9.2	20	X014-99-20	8.0	15	X014-99-15	4.0	8	X014-99-8
6-600	10.1	20	X014-99-20	8.7	20	X014-99-20	4.4	8	X014-99-8
6-680	11.4	20	X014-99-20	9.9	20	X014-99-20	4.9	10	X014-99-10
6-775	13.0	25	X014-99-25	11.3	20	X014-99-20	5.6	10	X014-99-10
12-225	7.5	15	X014-99-15	6.5	12	X014-99-12	3.3	6	X014-99-6
12-380	12.7	25	X014-99-25	11.0	20	X014-99-20	5.5	10	X014-99-10
12-450	15.1	30	X014-99-30	13.1	25	X014-99-25	6.5	12	X014-99-12
12-550	18.4	35	X014-99-35	16.0	30	X014-99-30	8.0	15	X014-99-15
12-600	20.1	40	X014-99-40	17.4	35	X014-99-35	8.7	20	X014-99-20
12-680	22.8	40	X014-99-40	19.8	35	X014-99-35	9.9	20	X014-99-20
12-775	26.0	50	X014-99-50	22.5	40	X014-99-40	11.3	20	X014-99-20
12-865	29.0	60	X014-99-60	25.1	45	X014-99-45	12.6	25	X014-99-25
18-380	19.1	35	X014-99-35	16.6	30	X014-99-30	8.3	15	X014-99-15
18-450	22.6	40	X014-99-40	19.6	35	X014-99-35	9.8	20	X014-99-20
18-550	27.7	50	X014-99-50	24.0	45	X014-99-45	12.0	25	X014-99-25
18-600	30.2	60	X014-99-60	26.2	50	X014-99-50	13.1	25	X014-99-25
18-680	34.2	60	X014-99-60	29.6	60	X014-99-60	14.8	30	X014-99-30
18-775	39.0	70	X014-99-70	33.8	60	X014-99-60	16.9	35	X014-99-35
18-865	43.5	80	X014-99-80	37.7	70	X014-99-70	18.9	35	X014-99-35
24-550	36.9	70	X014-99-70	32.0	60	X014-99-60	16.0	35	X014-99-35
24-680	45.6	80	X014-99-80	39.5	70	X014-99-70	19.8	35	X014-99-35

Shunt & DC Fuses

Shunt, 1ph. & 3ph.		
Ampere-hours	**Value**	**Part Number**
0 - 1050	300	X117-99-1
1051 - 1700	2 x 150	X117-99-2

Dc fuse, 1ph. & 3ph.		
Ampere-hours	**Value**	**Part Number**
225	80	X014-11-4
380 450 550	150	X014-11-3
600 680	200	X014-11-9
775 865	250	X014-11-16
960 1050	300	X014-11-17
1200 1500	400	X014-11-14
1700	2 x 250	X014-11-16

AC Input & Fuses, Multi Shift

3PH., Volt Model D (220/380/440 V.)

3 Phase; Model D									
Model	AC FUSES								
	220 Volts			380 Volts			440 Volts		
	I AC	Value	P/N	I AC	Value	P/N	I AC	Value	P/N
6-550	5.0	10	X014-99-10	2.9	6	X014-99-6	2.5	6	X014-99-6
6-600	5.5	10	X014-99-10	3.2	6	X014-99-6	2.7	6	X014-99-6
6-775	7.1	15	X014-99-15	4.1	8	X014-99-8	3.5	8	X014-99-8
6-865	7.9	15	X014-99-15	4.6	10	X014-99-10	4.0	8	X014-99-8
6-1050	9.6	20	X014-99-20	5.6	10	X014-99-10	4.8	10	X014-99-10
12-380	7.0	15	X014-99-15	4.0	8	X014-99-8	3.5	8	X014-99-8
12-550	10.1	20	X014-99-20	5.8	12	X014-99-12	5.0	10	X014-99-10
12-680	12.4	25	X014-99-25	7.2	15	X014-99-15	6.2	12	X014-99-12
12-775	14.2	25	X014-99-25	8.2	15	X014-99-15	7.1	15	X014-99-15
12-865	15.8	30	X014-99-30	9.2	20	X014-99-20	7.9	15	X014-99-15
12-960	17.6	35	X014-99-35	10.2	20	X014-99-20	8.8	20	X014-99-20
12-1050	19.2	35	X014-99-35	11.1	20	X014-99-20	9.6	20	X014-99-20
12-1200	22.0	40	X014-99-40	12.7	25	X014-99-25	11.0	20	X014-99-20
18-380	10.4	20	X014-99-20	6.0	12	X014-99-12	5.2	10	X014-99-10
18-450	12.4	25	X014-99-25	7.2	15	X014-99-15	6.2	12	X014-99-12
18-550	15.1	30	X014-99-30	8.7	20	X014-99-20	7.6	15	X014-99-15
18-600	16.5	30	X014-99-30	9.5	20	X014-99-20	8.2	15	X014-99-15
18-680	18.7	35	X014-99-35	10.8	20	X014-99-20	9.3	20	X014-99-20
18-775	21.3	40	X014-99-40	12.3	25	X014-99-25	10.6	20	X014-99-20
18-865	23.8	45	X014-99-45	13.8	25	X014-99-25	11.9	25	X014-99-25
18-960	26.4	50	X014-99-50	15.3	30	X014-99-30	13.2	25	X014-99-25
18-1050	28.8	60	X014-99-60	16.7	30	X014-99-30	14.4	30	X014-99-30
18-1200	33.0	60	X014-99-60	19.1	35	X014-99-35	16.5	30	X014-99-30
18-1500	41.2	80	X014-99-80	23.8	45	X014-99-45	20.6	40	X014-99-40
18-1700	46.7	100	X014-99-100	27.0	50	X014-99-50	23.3	45	X014-99-45
24-450	16.5	30	X014-99-30	9.5	20	X014-99-20	8.2	15	X014-99-15
24-380	13.9	25	X014-99-25	8.1	15	X014-99-15	7.0	15	X014-99-15
24-550	20.1	40	X014-99-40	11.7	25	X014-99-25	10.1	20	X014-99-20
24-600	22.0	40	X014-99-40	12.7	25	X014-99-25	11.0	20	X014-99-20
24-775	28.4	50	X014-99-50	16.4	30	X014-99-30	14.2	25	X014-99-25
24-865	31.7	60	X014-99-60	18.3	35	X014-99-35	15.8	30	X014-99-30
24-960	35.1	70	X014-99-70	20.3	40	X014-99-40	17.6	35	X014-99-35
24-1050	38.4	70	X014-99-70	22.3	40	X014-99-40	19.2	35	X014-99-35
36-380	20.9	40	X014-99-40	12.1	25	X014-99-25	10.4	20	X014-99-20
36-450	24.7	45	X014-99-45	14.3	30	X014-99-30	12.4	25	X014-99-25
36-550	30.2	60	X014-99-60	17.5	35	X014-99-35	15.1	30	X014-99-30
36-600	33.0	60	X014-99-60	19.1	35	X014-99-35	16.5	30	X014-99-30

3PH., Volt Model J (480/550/600 V.)

3 Phase;Model J									
Model	AC FUSES								
	480 Volts			550 Volts			600 Volts		
	I AC	Value	P/N	I AC	Value	P/N	I AC	Value	P/N
6-550	2.3	6	X014-99-6	2.0	4	X014-99-4	1.8	4	X014-99-4
6-600	2.5	6	X014-99-6	2.2	4	X014-99-4	2.0	4	X014-99-4
6-775	3.3	6	X014-99-6	2.8	6	X014-99-6	2.6	6	X014-99-6
6-865	3.6	8	X014-99-8	3.2	6	X014-99-6	2.9	6	X014-99-6
6-1050	4.4	8	X014-99-8	3.8	8	X014-99-8	3.5	8	X014-99-8
12-380	3.2	6	X014-99-6	2.8	6	X014-99-6	2.6	6	X014-99-6
12-550	4.6	10	X014-99-10	4.0	8	X014-99-8	3.7	8	X014-99-8
12-680	5.7	10	X014-99-10	5.0	10	X014-99-10	4.6	8	X014-99-8
12-775	6.5	12	X014-99-12	5.7	10	X014-99-10	5.2	10	X014-99-10
12-865	7.3	15	X014-99-15	6.3	12	X014-99-12	5.8	12	X014-99-12
12-960	8.1	15	X014-99-15	7.0	15	X014-99-15	6.4	12	X014-99-12
12-1050	8.8	20	X014-99-20	7.7	15	X014-99-15	7.0	15	X014-99-15
12-1200	10.1	20	X014-99-20	8.8	20	X014-99-20	8.1	15	X014-99-15
18-380	4.8	10	X014-99-10	4.2	8	X014-99-8	3.8	8	X014-99-8
18-450	5.7	10	X014-99-10	4.9	10	X014-99-10	4.5	8	X014-99-8
18-550	6.9	15	X014-99-15	6.0	12	X014-99-12	5.5	10	X014-99-10
18-600	7.6	15	X014-99-15	6.6	12	X014-99-12	6.0	12	X014-99-12
18-680	8.6	15	X014-99-15	7.5	15	X014-99-15	6.8	12	X014-99-12
18-775	9.8	20	X014-99-20	8.5	15	X014-99-15	7.8	15	X014-99-15
18-865	10.9	20	X014-99-20	9.5	20	X014-99-20	8.7	20	X014-99-20
18-960	12.1	25	X014-99-25	10.5	20	X014-99-20	9.7	20	X014-99-20
18-1050	13.2	25	X014-99-25	11.5	25	X014-99-25	10.6	20	X014-99-20
18-1200	15.1	30	X014-99-30	13.2	25	X014-99-25	12.1	25	X014-99-25
18-1500	18.9	35	X014-99-35	16.5	30	X014-99-30	15.1	30	X014-99-30
18-1700	21.4	40	X014-99-40	18.7	35	X014-99-35	17.1	30	X014-99-30
24-450	7.6	15	X014-99-15	6.6	12	X014-99-12	6.0	12	X014-99-12
24-550	9.2	20	X014-99-20	8.1	15	X014-99-15	7.4	15	X014-99-15
24-600	10.1	20	X014-99-20	8.8	20	X014-99-20	8.1	15	X014-99-15
24-680	11.4	20	X014-99-20	10.0	20	X014-99-20	9.1	20	X014-99-20
24-775	13.0	25	X014-99-25	11.4	20	X014-99-20	10.4	20	X014-99-20
24-865	14.5	30	X014-99-30	12.7	25	X014-99-25	11.6	25	X014-99-25
24-960	16.1	30	X014-99-30	14.1	25	X014-99-25	12.9	25	X014-99-25
24-1050	17.6	35	X014-99-35	15.4	30	X014-99-30	14.1	25	X014-99-25
36-380	9.6	20	X014-99-20	8.3	15	X014-99-15	7.7	15	X014-99-15
36-450	11.3	20	X014-99-20	9.9	20	X014-99-20	9.1	20	X014-99-20
36-550	13.8	25	X014-99-25	12.1	25	X014-99-25	11.1	20	X014-99-20
36-600	15.1	30	X014-99-30	13.2	25	X014-99-25	12.1	25	X014-99-25

1PH., Volt Model D (220/380/440V.)

1 Phase; Model D

Model	AC FUSES								
	220 Volts			380 Volts			440 Volts		
	I AC	Value	P/N	I AC	Value	P/N	I AC	Value	P/N
6-225	3.6	8	X014-99-8	2.1	4	X014-99-4	1.8	4	X014-99-4
6-380	6.0	12	X014-99-12	3.5	8	X014-99-8	3.0	6	X014-99-6
6-450	7.1	15	X014-99-15	4.1	8	X014-99-8	3.6	8	X014-99-8
6-550	8.7	20	X014-99-20	5.0	10	X014-99-10	4.4	8	X014-99-8
6-600	9.5	20	X014-99-20	5.5	10	X014-99-10	4.8	10	X014-99-10
6-680	10.8	20	X014-99-20	6.2	12	X014-99-12	5.4	10	X014-99-10
6-775	12.3	25	X014-99-25	7.1	15	X014-99-15	6.1	12	X014-99-12
12-225	7.1	15	X014-99-15	4.1	8	X014-99-8	3.6	8	X014-99-8
12-380	12.0	25	X014-99-25	7.0	15	X014-99-15	6.0	12	X014-99-12
12-450	14.3	25	X014-99-25	8.3	15	X014-99-15	7.1	15	X014-99-15
12-550	17.4	35	X014-99-35	10.1	20	X014-99-20	8.7	20	X014-99-20
12-600	19.0	35	X014-99-35	11.0	20	X014-99-20	9.5	20	X014-99-20
12-680	21.6	40	X014-99-40	12.5	25	X014-99-25	10.8	20	X014-99-20
12-775	24.6	45	X014-99-45	14.2	25	X014-99-25	12.3	25	X014-99-25
12-865	27.4	50	X014-99-50	15.9	30	X014-99-30	13.7	25	X014-99-25
18-380	18.1	35	X014-99-35	10.5	20	X014-99-20	9.0	20	X014-99-20
18-450	21.4	40	X014-99-40	12.4	25	X014-99-25	10.7	20	X014-99-20
18-550	26.2	50	X014-99-50	15.1	30	X014-99-30	13.1	25	X014-99-25
18-600	28.5	50	X014-99-50	16.5	30	X014-99-30	14.3	25	X014-99-25
18-680	32.3	60	X014-99-60	18.7	35	X014-99-35	16.2	30	X014-99-30
18-775	36.9	70	X014-99-70	21.3	40	X014-99-40	18.4	35	X014-99-35
18-865	41.1	80	X014-99-80	23.8	45	X014-99-45	20.6	40	X014-99-40
24-550	34.9	70	X014-99-70	20.2	40	X014-99-40	17.4	35	X014-99-35
24-680	43.1	80	X014-99-80	25.0	45	X014-99-45	21.6	40	X014-99-40

1PH., Volt Model J (480/550/600 V.)

1 Phase; Model J

Model	AC FUSES								
	480 Volts			550 Volts			600 Volts		
	I AC	Value	P/N	I AC	Value	P/N	I AC	Value	P/N
6-225	1.6	3	X014-99-3	1.4	3	X014-99-3	1.3	3	X014-99-3
6-380	2.8	6	X014-99-6	2.4	6	X014-99-6	2.2	4	X014-99-4
6-450	3.3	6	X014-99-6	2.9	6	X014-99-6	2.6	6	X014-99-6
6-550	4.0	8	X014-99-8	3.5	8	X014-99-8	3.2	6	X014-99-6
6-600	4.4	8	X014-99-8	3.8	8	X014-99-8	3.5	8	X014-99-8
6-680	4.9	10	X014-99-10	4.3	8	X014-99-8	4.0	8	X014-99-8
6-775	5.6	10	X014-99-10	4.9	10	X014-99-10	4.5	8	X014-99-8
12-225	3.3	6	X014-99-6	2.9	6	X014-99-6	2.6	6	X014-99-6
12-380	5.5	10	X014-99-10	4.8	10	X014-99-10	4.4	8	X014-99-8
12-450	6.5	12	X014-99-12	5.7	10	X014-99-10	5.2	10	X014-99-10
12-550	8.0	15	X014-99-15	7.0	15	X014-99-15	6.4	12	X014-99-12
12-600	8.7	20	X014-99-20	7.6	15	X014-99-15	7.0	15	X014-99-15
12-680	9.9	20	X014-99-20	8.6	20	X014-99-20	7.9	15	X014-99-15
12-865	12.6	25	X014-99-25	11.0	20	X014-99-20	10.1	20	X014-99-20
18-380	8.3	15	X014-99-15	7.2	15	X014-99-15	6.6	12	X014-99-12
18-450	9.8	20	X014-99-20	8.6	15	X014-99-15	7.8	15	X014-99-15
18-550	12.0	25	X014-99-25	10.5	20	X014-99-20	9.6	20	X014-99-20
18-600	13.1	25	X014-99-25	11.4	20	X014-99-20	10.5	20	X014-99-20
18-680	14.8	30	X014-99-30	12.9	25	X014-99-25	11.9	25	X014-99-25
18-775	16.9	30	X014-99-30	14.7	30	X014-99-30	13.5	25	X014-99-25
18-865	18.9	35	X014-99-35	16.5	30	X014-99-30	15.1	30	X014-99-30
24-550	16.0	30	X014-99-30	14.0	25	X014-99-25	12.8	25	X014-99-25
24-680	19.8	35	X014-99-35	17.2	35	X014-99-35	15.8	30	X014-99-30

1PH., Volt Model A (120/208/240 V.)

1 Phase; Model A

Model	AC FUSES								
	120 Volts			208 Volts			240 Volts		
	I AC	Value	P/N	I AC	Value	P/N	I AC	Value	P/N
6-225	6.5	12	X014-99-12	3.8	8	X014-99-8	3.3	6	X014-99-6
6-380	11.0	20	X014-99-20	6.4	12	X014-99-12	5.5	10	X014-99-10
6-450	13.1	25	X014-99-25	7.5	15	X014-99-15	6.5	12	X014-99-12
6-550	16.0	30	X014-99-30	9.2	20	X014-99-20	8.0	15	X014-99-15
6-600	17.4	35	X014-99-35	10.1	20	X014-99-20	8.7	20	X014-99-20
6-680	19.8	35	X014-99-35	11.4	20	X014-99-20	9.9	20	X014-99-20
6-775	22.5	40	X014-99-40	13.0	25	X014-99-25	11.3	20	X014-99-20
12-225	13.1	25	X014-99-25	7.5	15	X014-99-15	6.5	12	X014-99-12
12-380	22.1	40	X014-99-40	12.7	25	X014-99-25	11.0	20	X014-99-20
12-450	26.2	50	X014-99-50	15.1	30	X014-99-30	13.1	25	X014-99-25
12-550	32.0	60	X014-99-60	18.4	35	X014-99-35	16.0	30	X014-99-30
12-600	34.9	70	X014-99-70	20.1	40	X014-99-40	17.4	35	X014-99-35

OUTPUT CABLE REPLACEMENT

Charger Cable Size

Charger AH Rating	Standard Cable Gauge
0 - 775	#2
776 - 1050	1/0
1051 - 1200	2/0
1201 - 1500	3/0

NOTE: Cable Kits do not include the connector housing, only the contact, the cable grommet, and cable lugs. These standard kits are nine feet (9') long.

Replacement Cable Kits

Cable Gauge	Kit for SB 175 Connector	Kit for SB 350 Connector
#2	X225-#2-175	X225-#2-350
1/0	X225-1/0-175	X225-1/0-350
2/0	N/A	X225-2/0-350
3/0	N/A	X225-3/0-350

NOTE: Cable Kits do not include the connector housing, only the contact.

Connector Housing Part Numbers

CONNECTOR PART NUMBER	DESCRIPTION	CABLE SIZE	CONNECTOR PART NUMBER	DESCRIPTION	CABLE SIZE
5804	EC	#2 – 2/0	6340	SBX350 GRAY	#2 – 4/0
6316	SB3	#2 – 1/0	6341	SBX350 BLUE	#2 – 4/0
6320	SB350 GRAY	#2 – 4/0	6342	SBX350 RED	#2 – 4/0
6321	SB350 BLUE	#2 – 4/0	6343	SBX350 GREEN	#2 – 4/0
6322	SB350 RED	#2 – 4/0	6359	SBX350 BLACK	#2 – 4/0
6323	SB350 YELLOW	#2 – 4/0	6360	SBX350 YELLOW	#2 – 4/0
6324	SB350 GREEN	#2 – 4/0	6370	SBX175 GRAY	#2 – 1/0
6325	SB175 GRAY	#2 – 1/0	6371	SBX175 BLUE	#2 – 1/0
6326	SB175 BLUE	#2 – 1/0	6372	SBX175 ORANGE	#2 – 1/0
6327	SB175 ORANGE	#2 – 1/0	6373	SBX175 YELLOW	#2 – 1/0
6328	SB175 YELLOW	#2 – 1/0	6378	SBX175 RED	#2-1/0
6329	SB175 RED	#2-1/0	7205	YC	#2 – 3/0

When ordering replacement cables:

1. Determine cable size and length: L13; L15; L18; L20; L25; L30
2. Determine kit part number by connector type (SB175 or SB350).
3. Determine connector housing part number.

Example:
For a charger requiring twenty feet (20') of 2/0AWG (gauge) cables and a SB350 RED connector, the <u>two</u> part numbers to order are:

1. X225-2/0-350-L20
2. 6322

1PH. Standard Wiring

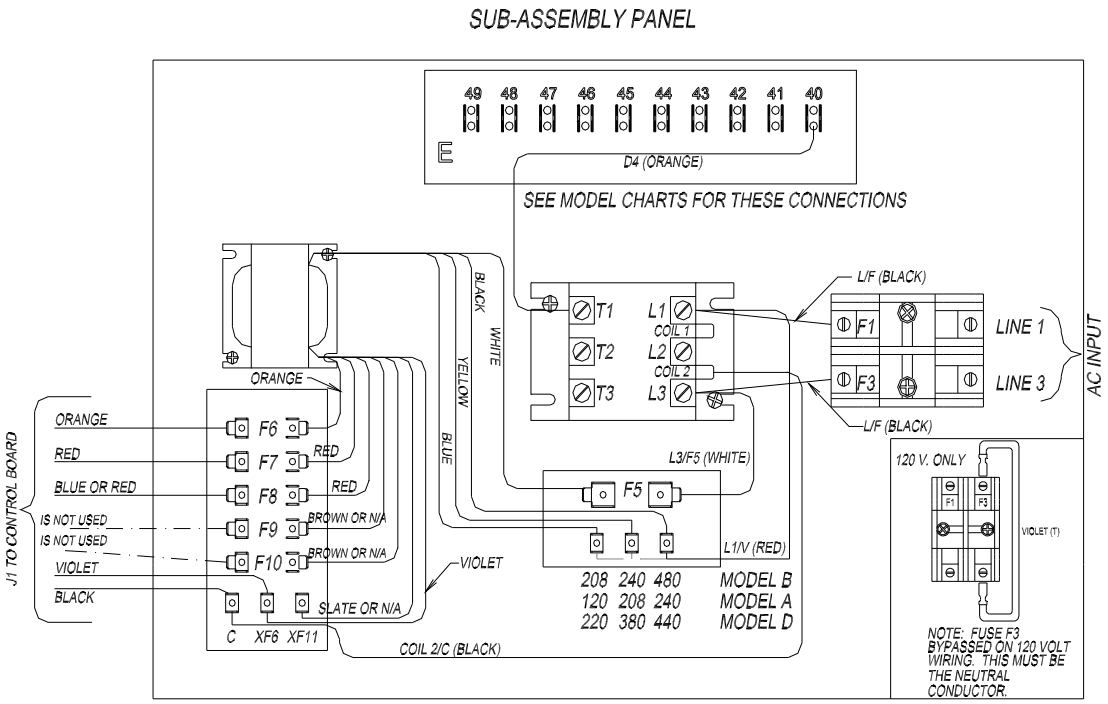

3PH. Standard Wiring

NOTE: For T3, see wiring connection charts.

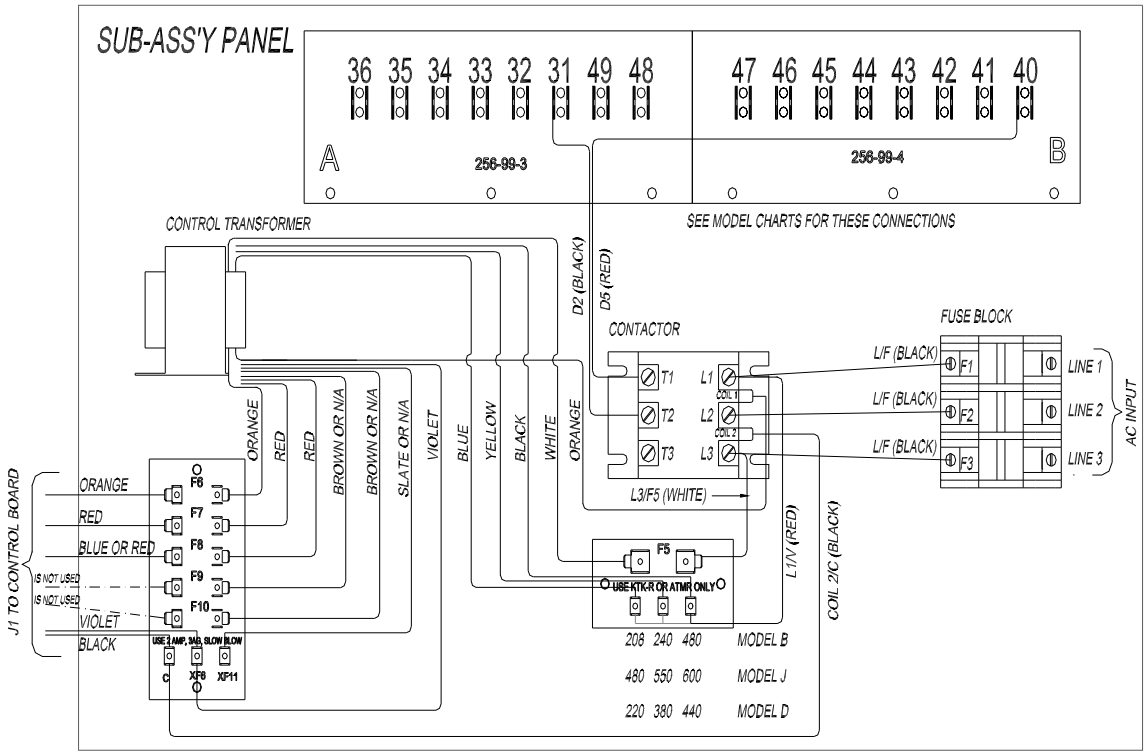

SCHEMATIC, 1 PHASE, VOLT MODEL B

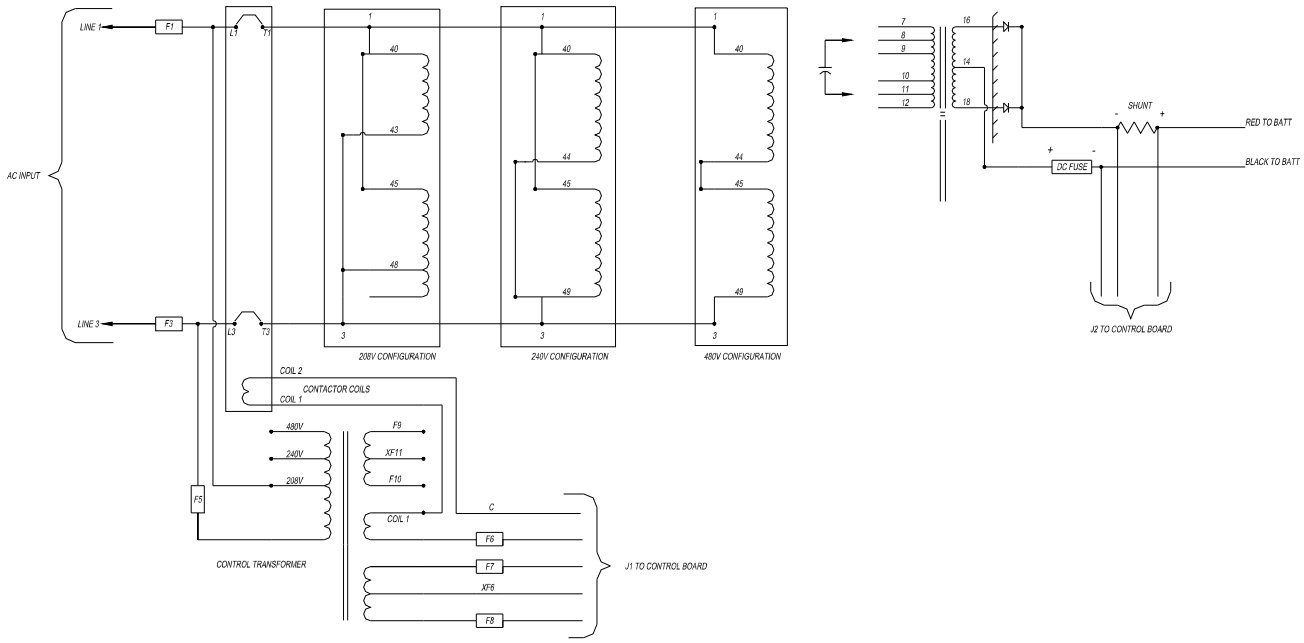

SCHEMATIC, 3 PHASE, VOLT MODEL B

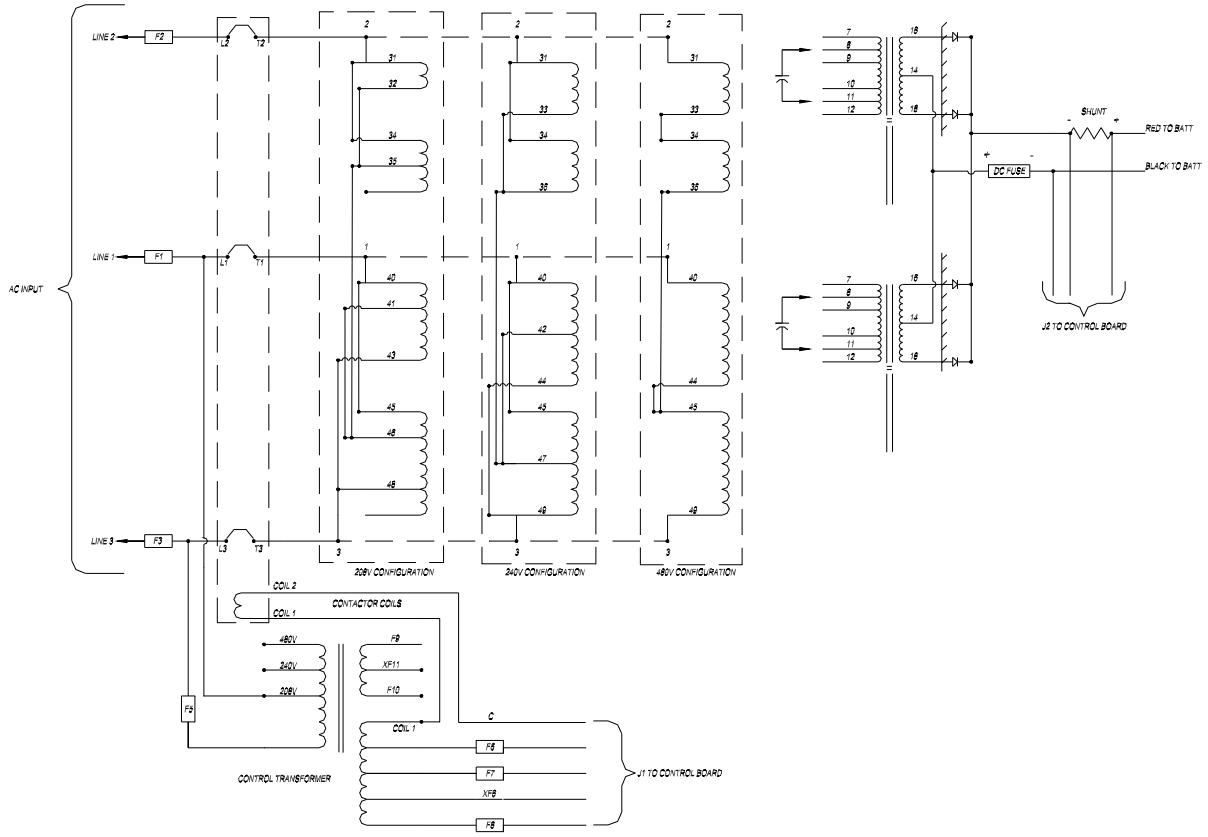

SCHEMATIC, 1 PHASE, VOLT MODEL D

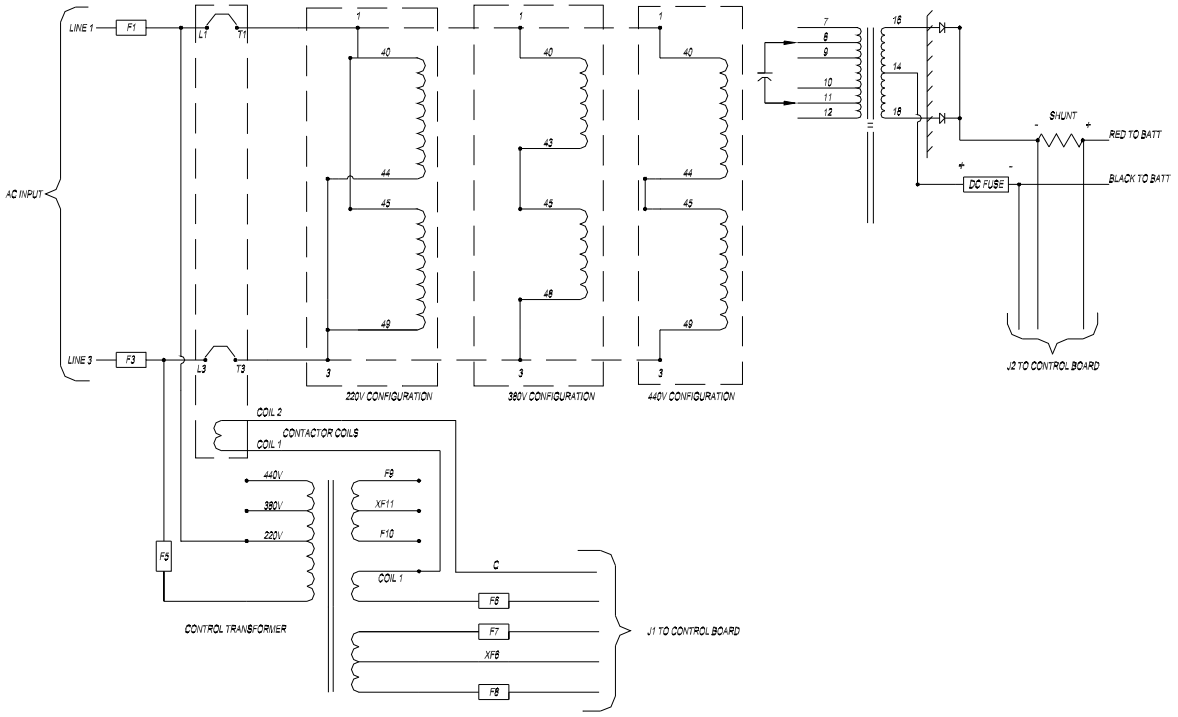

SCHEMATIC, 3 PHASE, VOLT MODEL D

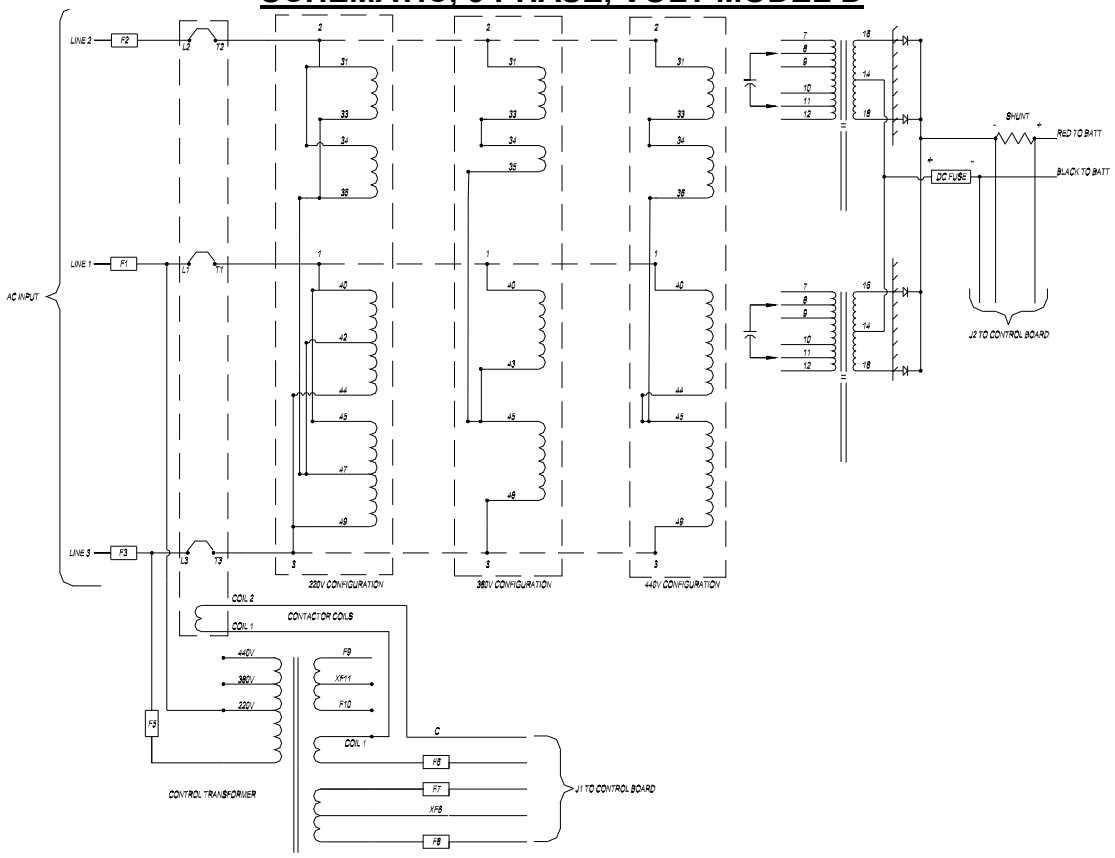

SCHEMATIC, 1 PHASE, VOLT MODEL J

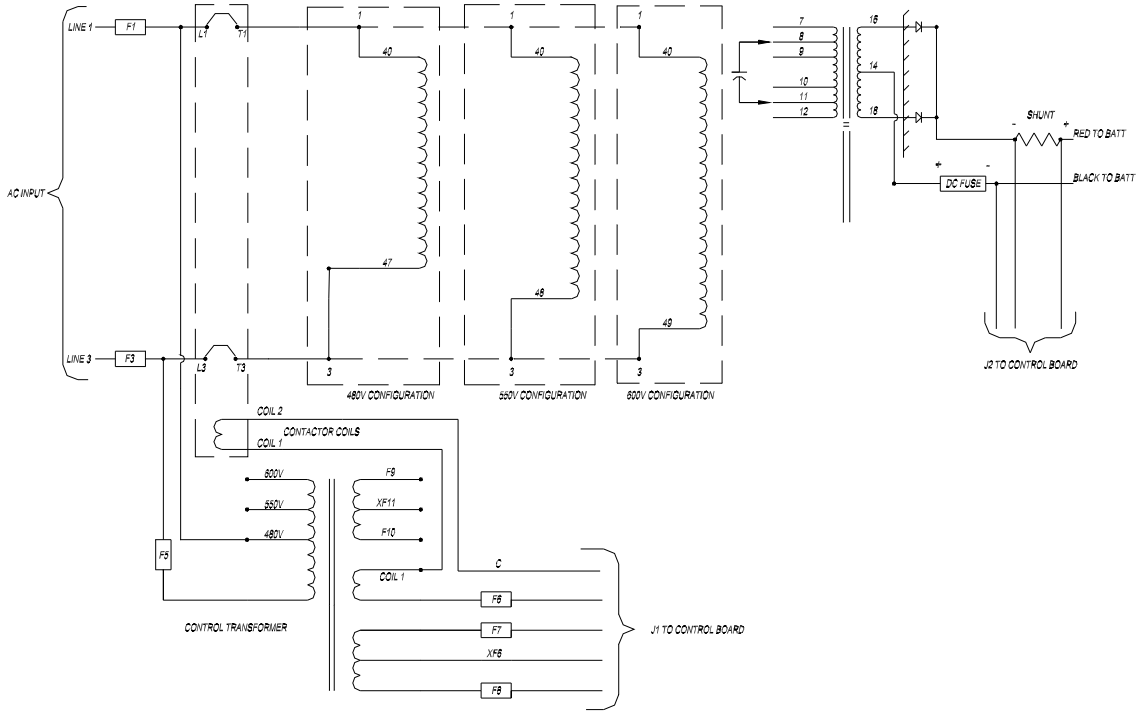

SCHEMATIC, 3 PHASE, VOLT MODEL J

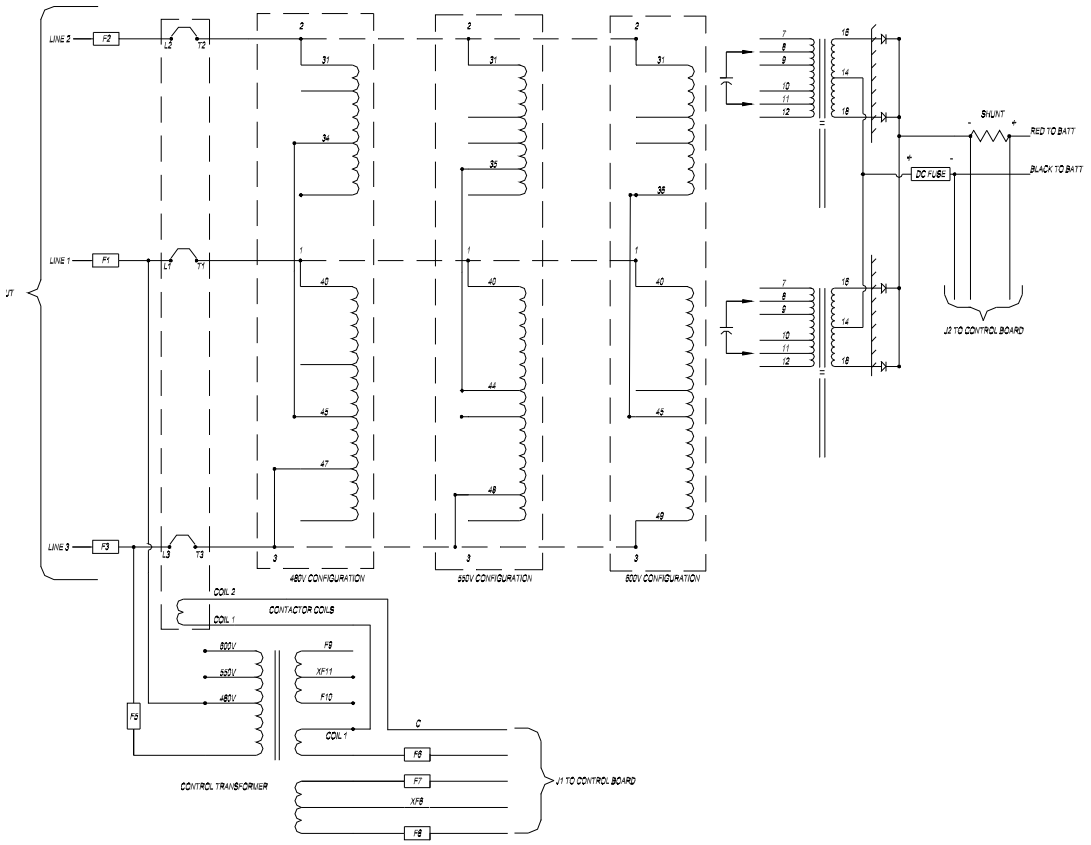

SCHEMATIC, 1 PHASE, VOLT MODEL A

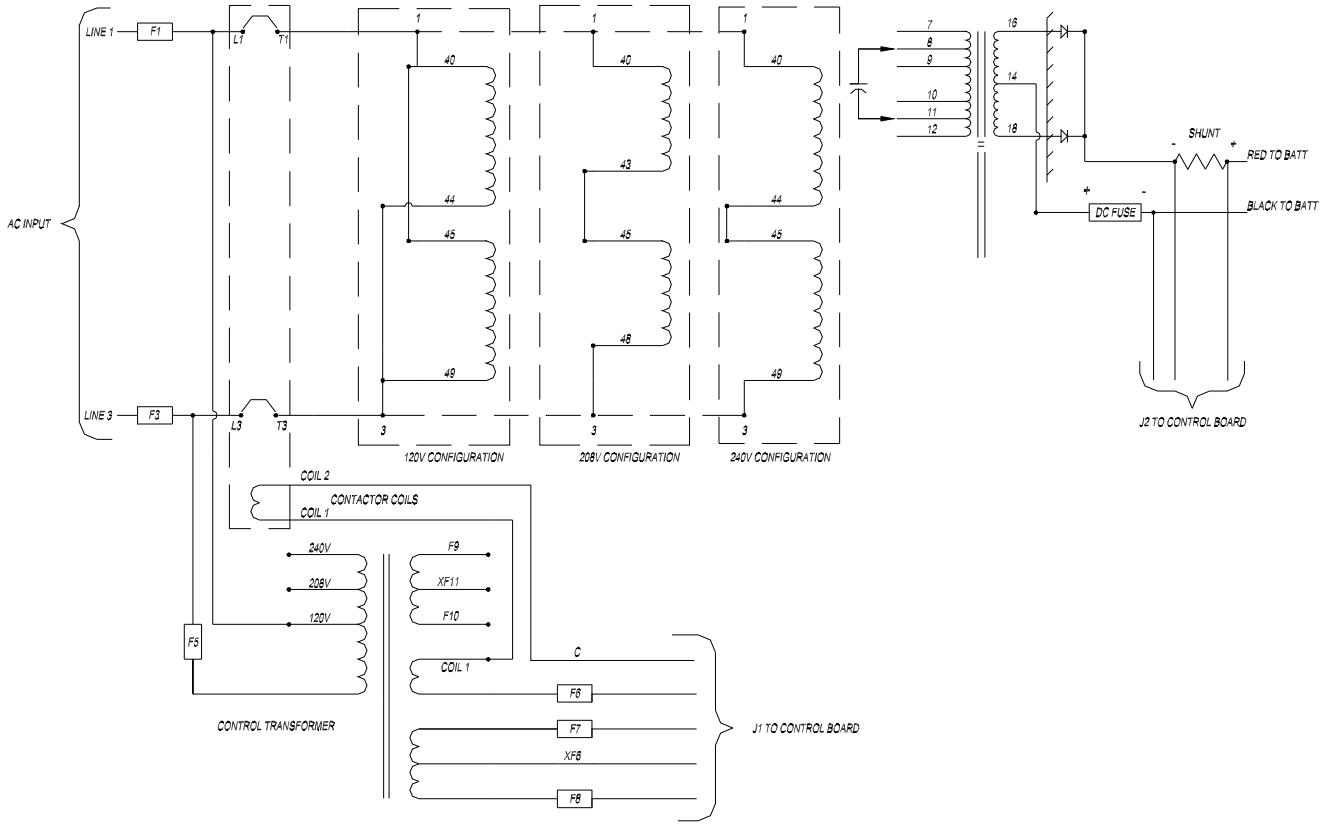

MAINTENANCE LOG

1. Modifications to Factory Settings

Date	Variable	Change	Service Technician

2. Service

Date	Description	Service Technician

TAYLOR - DUNN

General Maintenance

TABLE OF CONTENTS

MAINTENANCE GUIDELINES

⚠WARNING

Periodic maintenance and service must be performed on this vehicle. Failure to complete these scheduled maintenance and service procedures can result in severe bodily injury and/or property damage. It is the owner and/or operators responsibility to insure that proper service and maintenance is performed on the vehicle, described in this manual.

⚠WARNING

Before starting any repairs:

1. **Make sure the ON-OFF switch is in the "OFF" position.**
2. **Place the forward-reverse switch in the center "OFF" position.**
3. **Set the park brake.**
4. **Place blocks under the front wheels to prevent vehicle movement.**
5. **Unplug the main battery connector.**

⚠WARNING

Read and follow all of the guidelines listed below. Failure to follow these guidelines may result in severe bodily injury and/or property damage.

- Avoid fire hazards and have fire protection equipment present in the work area. Conduct vehicle performance checks in an authorized area where safe clearance exists.
- Before starting the vehicle, follow the recommended safety procedures in Section 2, "Safety Rules and Operational Information."
- Ventilate the work area properly.
- Regularly inspect and maintain in a safe working condition, brakes, steering mechanisms, speed and directional control mechanisms, warning devices, lights, governors, guards, and safety devices.
- Inspect and maintain battery limit switches, protective devices, electrical conductors, and connections in conformance with Taylor-Dunn's recommended procedures.
- Keep the vehicle in clean condition to minimize fire hazards and facilitate detection of loose or defective parts.
- Do not use an open flame to check level or leakage of battery electrolyte.
- Do not use open pans of fuel or flammable fluids for cleaning parts.
- Only properly trained and authorized technicians should perform maintenance or repairs to this vehicle.

MAINTENANCE SCHEDULE

Refer to the maintenance schedules in section Safety Rules and Operating instructions.

TROUBLESHOOTING GUIDE

Symptom	Probable Cause
Steering Pulls in One Direction	Front End Out of Alignment
	Low Tire Pressure
Hard Steering	Dry Lube Points in Steering Linkage
	Damaged King Pin/Ball Joint
	Low Tire Pressure
Excessive Steering Play	Worn Ball Joints
	Mis-Adjusted or Worn Steering Gear
	Loose Steering Linkage
Lack of Power or Slow Operation	Brakes or Parking Brakes Dragging
	Worn Drive Gears
	Front End Out of Alignment
	Defective Speed Control
Abnormal Noise	Worn Drive Gears or Bearings
	Worn Front /Rear Axle Bearings
	Loose Lug Nuts
	Motor Bearings Worn
Oil Leak in Rear Bearing Area	Rear Wheel Bearing and/or Gasket Failed
	Drive Over Filled
Brake Pedal Soft or Spongy	Air in Brake Lines
Brake Pedal Low	Brake Worn (1/16" Wear Limit)
	Brake Fluid Low
	Brakes Out of Adjustment
Braking Power Low	Brake Worn (1/16" Wear Limit)
	Brake Pads Contaminated with Fluid
	Brake Pedal Linkage Binding
	Brakes Out of Adjustment
	Air in Brake Lines

LUBRICATION CHART

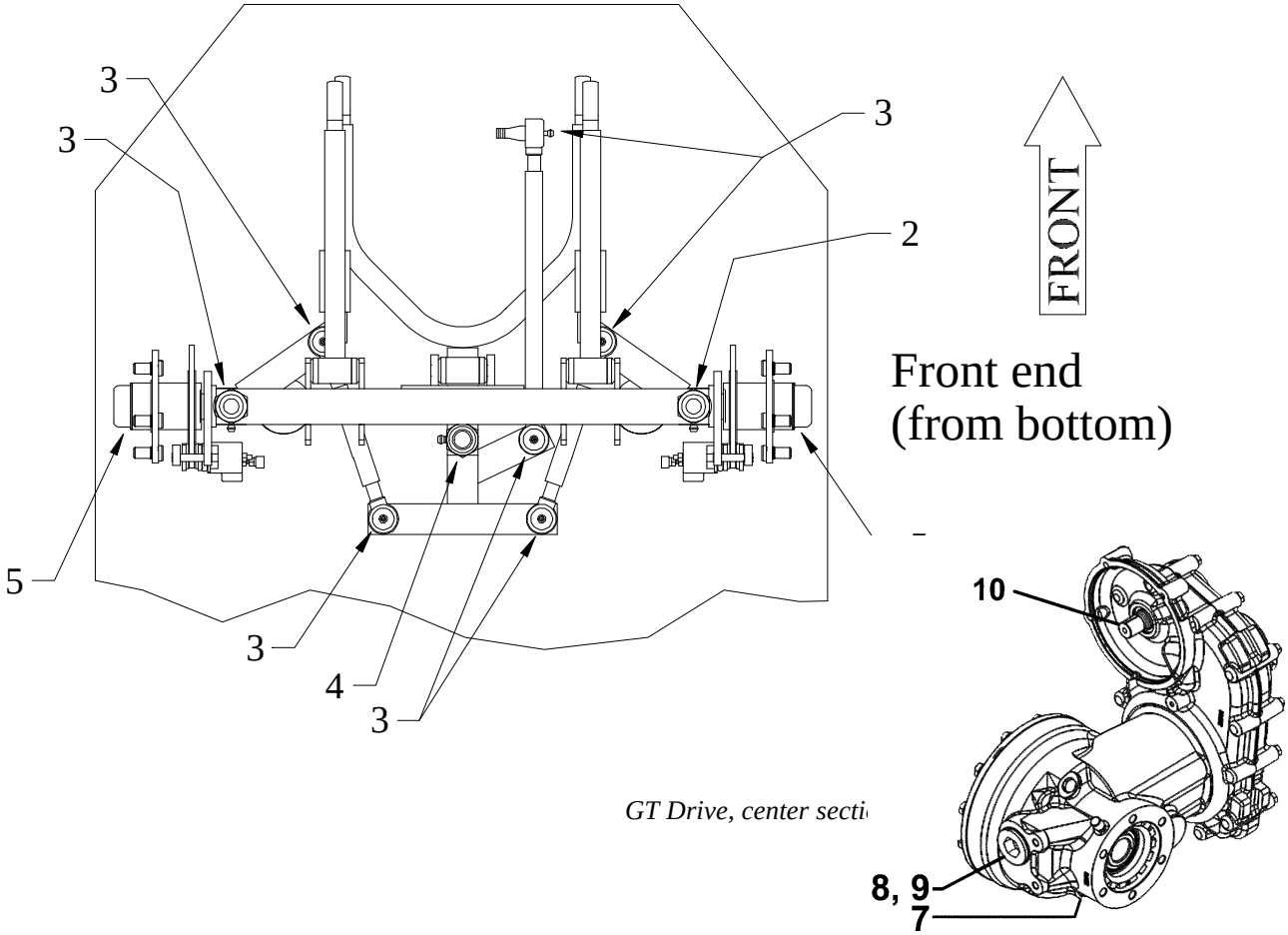

GT Drive, center secti

#	Description	Locations	Lubricant Type
1	-	-	-
2	King Pin	2	General Purpose Grease
3	Ball Joints	6	General Purpose Grease
4	Idler Pivot	1	General Purpose Grease
5	Front Wheel Bearings	2	High Temperature Wheel Bearing Grease
6	-	-	-
7	Drive Drain Plug	1	
8	Drive Level Plug	1	
9	Drive Fill Plug	1	SAE 75W90 Synthetic Hypoid Gear Oil
10	Motor Coupler	1	Part Number 94-421-34 Moly Paste

Front Axle Service

TABLE OF CONTENTS

INSPECT THE FRONT WHEEL BEARINGS AND KING PIN

⚠WARNING

1. **Make sure the ON-OFF switch is in the "OFF" position, then remove the key.**
2. **Place the forward-reverse switch in the center "OFF" position.**
3. **If equipped with a hand operated park brake, set the brake.**
4. **Place blocks under the front wheels to prevent vehicle movement.**
5. **Unplug the main battery connector.**

⚠WARNING

Always use a lifting strap, hoist, and jack stands, of adequate capacity to lift and support the vehicle. Failure to use lifting and support devices of rated load capacity may result in severe bodily injury.

6. Raise the front of the vehicle and support with jack stands.
7. Grab the top and bottom of the tire/wheel assembly. Feel for any movement or play while pulling and pushing on the top and bottom of the tire. Any movement or play is indication of loose wheel bearings or king pin.

   NOTE: Refer to the **Adjust Front Wheel Bearings** *section for information regarding the adjustment of the wheel bearings.*

   NOTE: If the king pin is loose, then refer to **Replace the King Pins and Bushings** *for information regarding replacing the king pin bushings. There are no adjustments for the king pin or bushings.*

8. Spin the wheel and listen for any grinding noise. Any grinding noise may be an indication of worn or damaged wheel bearings.

   NOTE: Refer to the **Replace Front Wheel Bearings** *section for information regarding the replacement of the wheel bearings.*

9. Lower the vehicle.
10. Reconnect the main battery connector.
11. Remove the blocks from behind the wheels.
12. Test drive the vehicle.

ADJUST FRONT WHEEL BEARINGS

⚠WARNING

1. **Make sure the ON-OFF switch is in the "OFF" position, then remove the key.**
2. **Place the forward-reverse switch in the center "OFF" position.**
3. **If equipped with a hand operated park brake, set the brake.**
4. **Place blocks under the front wheels to prevent vehicle movement.**
5. **Unplug the main battery connector.**

⚠WARNING

Always use a lifting strap, hoist, and jack stands, of adequate capacity to lift and support the vehicle. Failure to use lifting and support devices of rated load capacity may result in severe bodily injury.

6. Raise the front of the vehicle and support with jack stands.
7. Remove the hub dust cap and cotter pin.
8. While rotating the hub, tighten the spindle nut to 30 ft-lbs. This seats the bearings.
9. Back off the spindle nut one flat until the hub turns, but is not loose.
10. Spin the wheel and listen for any grinding noise. Any grinding noise may be an indication of worn or damaged wheel bearings.

    NOTE: Refer to the **Replace Front Wheel Bearings** *section for information regarding the replacement of the wheel bearings.*

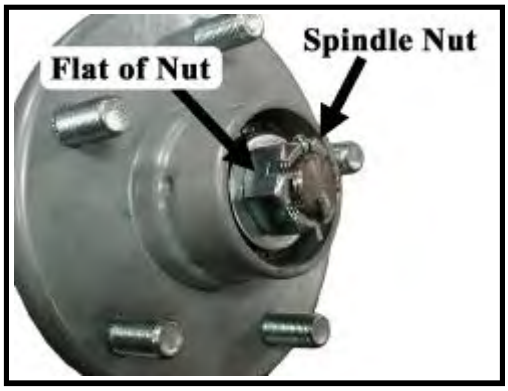

Hub with Dust Cap Removed

11. Install a new cotter pin.
12. Install the dust cap.
13. Lower the vehicle.
14. Reconnect the main battery connector.
15. Remove the blocks from behind the wheels.
16. Test drive the vehicle.

FRONT AXLE REMOVAL AND INSTALLATION

Removal

⚠WARNING

1. **Make sure the ON-OFF switch is in the "OFF" position, then remove the key.**
2. **Place the forward-reverse switch in the center "OFF" position.**
3. **If equipped with a hand operated park brake, set the brake.**
4. **Place blocks under the front wheels to prevent vehicle movement.**
5. **Unplug the main battery connector.**

⚠WARNING

Always use a lifting strap, hoist, and jack stands, of adequate capacity to lift and support the vehicle. Failure to use lifting and support devices of rated load capacity may result in severe bodily injury.

6. Raise the front of the vehicle and support with jack stands.
7. Remove both front wheels. Refer to ***Tires and Wheels*** section for information regarding removing the front wheels.
8. Tie up or support the front axle so it can not fall out of the vehicle.
9. Disconnect the drag link ball joint or rod end from the steering pivot on the front axle assembly.

   NOTE: Refer to the **Replacing the Ball Joints** *section for information regarding the removal of the ball joints or rod ends.*

10. Disconnect the hydraulic brake lines from the brake bodies.
11. Remove the three bolts holding the front axle beam to the upper wishbone and the two lower suspension links and remove the axle from the vehicle.

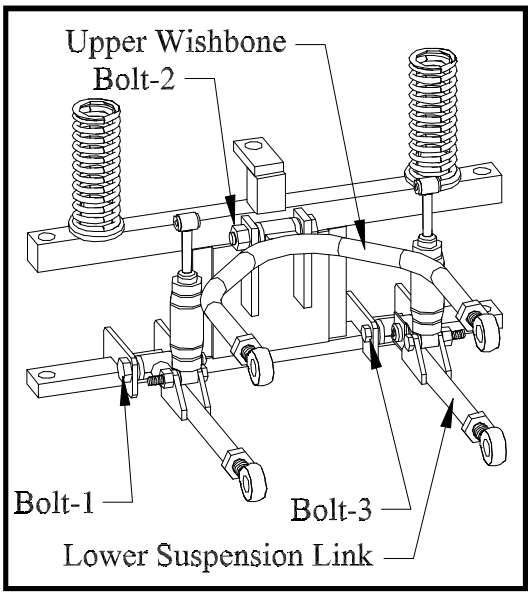

Viewed from front

Installation

⚠WARNING

1. **Make sure the ON-OFF switch is in the "OFF" position, then remove the key.**
2. **Place the forward-reverse switch in the center "OFF" position.**
3. **If equipped with a hand operated park brake, set the brake.**
4. **Place blocks under the front wheels to prevent vehicle movement.**
5. **Unplug the main battery connector.**

⚠WARNING

Always use a lifting strap, hoist, and jack stands, of adequate capacity to lift and support the vehicle. Failure to use lifting and support devices of rated load capacity may result in severe bodily injury.

6. Raise the front of the vehicle and support with jack stands.
7. Install the front axle in reverse order of removal.

   NOTE: Use all new cotter pins.

   NOTE: Refer to the **Replacing the Ball Joints** *section for information regarding the installing the ball joints or rod ends.*

   NOTE: Refer to **Tires and Wheels** *section for information regarding removing the front wheels.*
8. Realign the front wheels. Refer to ***Steering Component Service*** section for information regarding realigning the front wheels.
9. If equipped with front brakes, bleed the brakes. Refer to ***Brake Service*** section for information regarding bleeding the brakes.
10. Lower the vehicle.
11. Reconnect the main battery connector.
12. Remove the blocks from behind the wheels.
13. Test drive the vehicle.

FRONT AXLE DISASSEMBLY

Disassembling and reassembling involves removing and replacing the left and right steering knuckles and king pin bushings. Refer to the following sections for information regarding these procedures:

Replace the Steering Knuckle

Replace the King Pins and Bushings

NOTE: The front axle does not have to be removed unless the axle beam must be replaced. Refer to **Front Axle Removal and Installation** *for information regarding removing the front axle.*

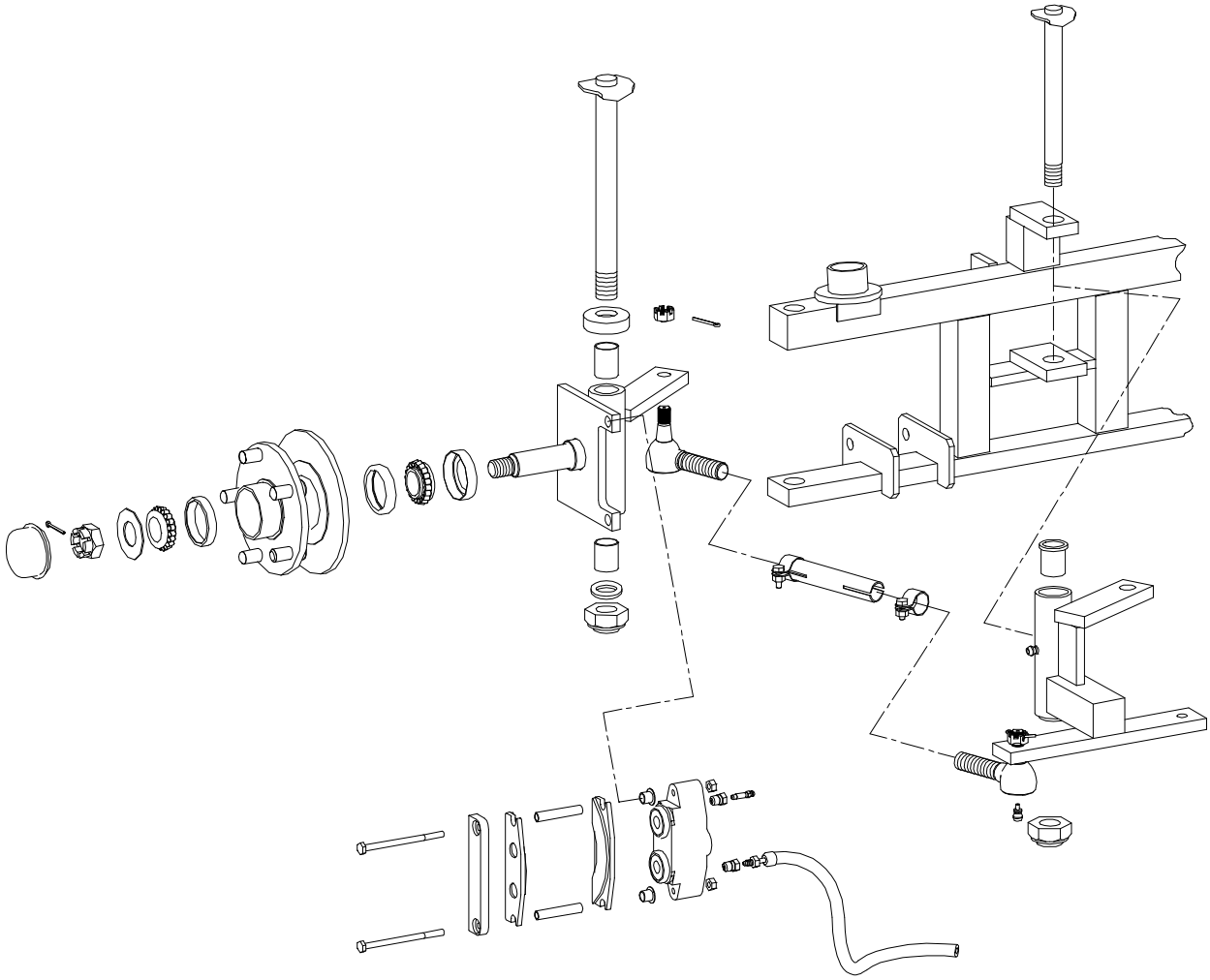

View from rear

REPLACE FRONT WHEEL BEARINGS

⚠WARNING

1. **Make sure the ON-OFF switch is in the "OFF" position, then remove the key.**
2. **Place the forward-reverse switch in the center "OFF" position.**
3. **If equipped with a hand operated park brake, set the brake.**
4. **Place blocks under the front wheels to prevent vehicle movement.**
5. **Unplug the main battery connector.**

⚠WARNING

Always use a lifting strap, hoist, and jack stands, of adequate capacity to lift and support the vehicle. Failure to use lifting and support devices of rated load capacity may result in severe bodily injury.

6. Raise the front of the vehicle and support with jack stands.
7. Remove the tire/wheel assembly from the hub. Refer to ***Replace the Steering Knuckle*** for information regarding removing the steering knuckle.
8. Remove the hub dust cap, cotter pin, and spindle nut.
9. Remove the hub from the steering knuckle.

   NOTE: For a front disc brake option you must remove the brake body before removing the hub. Refer to the **Brakes** *section for information regarding the removal of the brake body.*

   NOTE: Catch the outer bearing as it falls out.

Hub with Dust Cap Removed

10. Thoroughly clean all grease from the inside of the hub and the bearings.
11. Inspect and replace the races and bearings as a set.

    NOTE: It is recommended to replace all four bearings and races in the left and right wheels as a set.

12. Assemble in reverse order, using new grease seals.
    a. Pack inner and outer bearings with grease.
    b. While rotating the hub, tighten the spindle nut to 30 ft-lbs. This seats the bearings.
    c. Back off the spindle nut one flat until the hub turns, but is not loose.
    d. Install a new cotter pin.

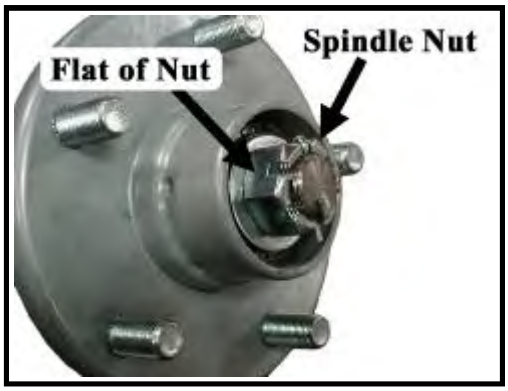

Hub with Dust Cap Removed

13. Install the hub dust cap.
14. Reinstall the brake body and the tire/wheel assembly.

    NOTE: Refer to the **Brakes** *section for information regarding the installation of the brake body.*

15. Lower the vehicle.
16. Reconnect the main battery connector.
17. Remove the blocks from behind the wheels.
18. Test drive the vehicle.

REPLACE THE KING PINS AND BUSHINGS

There are different types of king pin bushings depending on the configuration of your vehicle.

- Bronze bushings in the axle beam.
- Bronze bushings in the steering knuckle.
- Metal backed teflon bushings in the axle beam.

NOTE: Bronze bushings must be reamed or broached to the proper diameter after they are pressed into the axle beam or steering knuckle.

Refer to the illustration below for the type of bushing in your vehicle. These are typical represetations of types of bushings. The actual bushings in your vehicle may vary.

⚠WARNING

Failure to correctly broach or ream bronze bushings may result in steering difficulty and loss of control of the vehicle causing severe bodily injury and /or property damage.

⚠WARNING

1. **Make sure the ON-OFF switch is in the "OFF" position, then remove the key.**
2. **Place the forward-reverse switch in the center "OFF" position.**
3. **If equipped with a hand operated park brake, set the brake.**
4. **Place blocks under the front wheels to prevent vehicle movement.**
5. **Unplug the main battery connector.**

⚠WARNING

Always use a lifting strap, hoist, and jack stands, of adequate capacity to lift and support the vehicle. Failure to use lifting and support devices of rated load capacity may result in severe bodily injury.

6. Raise the front of the vehicle and support with jack stands.

Bushings shown are typical for reference only, the bushings in your vehicle may vary

7. Remove the steering knuckle. Refer to ***Replace the Steering Knuckle*** for information regarding removing the steering knuckle.

   NOTE: It is not necessary to remove the tie rod or drag link for this procedure.

8. Press the king pin bushings out from the axle or steering knuckle.
9. Press new bushings into the axle or steering knuckle.
10. Ream or broach bronze bushings to 0.8755 - 0.8765 inches.
11. Inspect the king pin for damage or wear. If any damage or wear is noted then the pin must be replaced.

⚠WARNING **Failure to correctly broach or ream bronze bushings may result in steering difficulty and loss of control of the vehicle causing severe bodily injury and /or property damage.**

12. Reassemble in reverse order.

    *NOTE: Refer to **Replace the Steering Knuckle** for information on installing the steering knuckle.*

    NOTE: It is recommended that the thrust washers or bearing be replaced whenever replacing the king pin bushings. Refer to the **Replacement Parts** *section for the orientation of the bearing or washers in your vehicle.*

13. Grease the bushings (bronze only).
14. Lower the vehicle.
15. Reconnect the main battery connector.
16. Remove the blocks from behind the wheels.
17. Test drive the vehicle.

REPLACE THE PIVOT PIN AND BUSHINGS

The procedure to replace the pivot pin is the same as the king pin procedure.

Ream or broach the bronze pivot bushings to 0.878 - 0.880 inches.

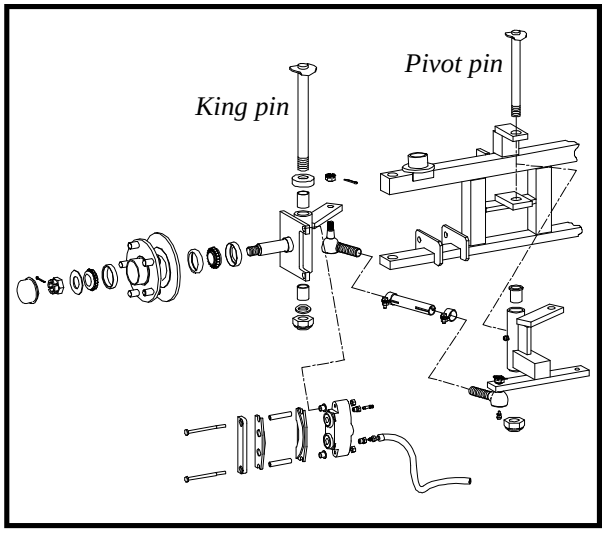

REPLACE THE STEERING KNUCKLE

⚠WARNING

1. **Make sure the ON-OFF switch is in the "OFF" position, then remove the key.**
2. **Place the forward-reverse switch in the center "OFF" position.**
3. **If equipped with a hand operated park brake, set the brake.**
4. **Place blocks under the front wheels to prevent vehicle movement.**
5. **Unplug the main battery connector.**

⚠WARNING

Always use a lifting strap, hoist, and jack stands, of adequate capacity to lift and support the vehicle. Failure to use lifting and support devices of rated load capacity may result in severe bodily injury.

6. Raise the front of the vehicle and support with jack stands.
7. Remove the tire/wheel assembly. Refer to ***Tires and Wheels*** section for information regarding removing the tire/wheel assembly.
8. Remove the hub bearing cap, cotter pin and nut, then remove the hub from the steering knuckle.

   NOTE: For a front disc brake option you must remove the brake body before removing the hub. Refer to the **Brakes** *section for information regarding the removal of the brake body. Do not remove the hydraulic brake line from the brake body. If the brake line is removed then it will be necessary to bleed the brakes.*

   NOTE: Catch the outer bearing as it falls out.

Hub with Dust Cap Removed

9. Remove the drag link and/or tie rod from the steering knuckle. Refer to ***Replace the Ball Joints, Tie Rods, Drag Link*** in this section for information regarding removal of the drag link or tie rod.
10. While supporting the knuckle, remove the king pin and thrust bearing.
11. Remove the knuckle from the axle.
12. Thoroughly clean and/or replace all bearings, nuts, washers, and bushings.

    NOTE: Both the left and right side bushings and thrust bearings should be replaced as a set.

13. Assemble in reverse order.
14. Pack the thrust bearing with grease.
15. Tighten the king pin nut until there is 0.005” clearance between the top of the thrust bearing and the upper arm of the axle beam.

    NOTE: Refer to **Replace Front Wheel Bearings** *for information regarding proper tightening of the spindle nut.*

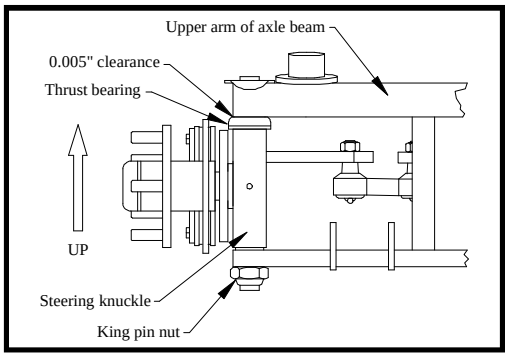

16. Install new cotter pins.
17. Realign the wheels.

    NOTE: Refer to the **Steering** *section for information regarding realignment of the front wheels.*

18. Lower the vehicle.
19. Reconnect the main battery connector.
20. Remove the blocks from behind the wheels.
21. Test drive the vehicle.

Steering Component Service

TABLE OF CONTENTS

FRONT END ALIGNMENT

Inspection, Axle Centers

⚠WARNING

1. **Make sure the ON-OFF switch is in the "OFF" position, then remove the key.**
2. **Place the forward-reverse switch in the center "OFF" position.**
3. **If equipped with a hand operated park brake, set the brake.**
4. **Place blocks under the front wheels to prevent vehicle movement.**
5. **Unplug the main battery connector.**

⚠WARNING

Always use a lifting strap, hoist, and jack stands, of adequate capacity to lift and support the vehicle. Failure to use lifting and support devices of rated load capacity may result in severe bodily injury.

6. Raise the front of the vehicle and support with jack stands.
7. Measure the distances from the rear of the lower axle beam to the rear wall of the wheel well on both sides of the axle beam next to the steering knuckle. Adjust the lower suspension links so that the distance is between 10-1/8 to 10-3/8 inches.

   NOTE: The difference between the left and right measurement should be no more than 1/8 inch.

8. Measure the distances from the rear of the upper axle beam to the rear wall of the wheel well on both sides of the axle beam next to the steering knuckle. Adjust the upper wishbone link so that the distance is 1/2 inch less than the lower measurement.

   NOTE: Do not continue with the front end alignment until the axle centers are properly adjusted.

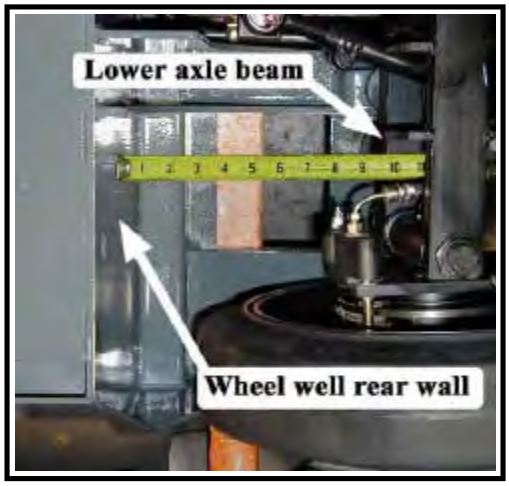

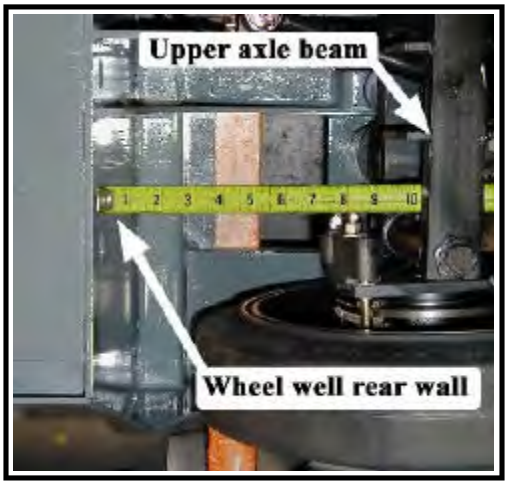

Center the Wheels

9. Center the steering gear and tie it off so that it cannot rotate.

   NOTE: Refer to **Center the Steering Gear** *section for information regarding centering of the steering gear.*

⚠WARNING

Do not drive the vehicle while the steering wheel or front wheels are tied in position. Driving the vehicle while the steering wheel or front wheels tied in the position may cause loss of control of the vehicle resulting in severe bodily injury and/or property damage.

10. Loosen the ball joint clamps on the drag link.
11. Adjust the drag link so that the steering pivot arm is parallel with the axle beam.
12. Position the ball joint clamps as shown and tighten to 28-32 ft lbs.

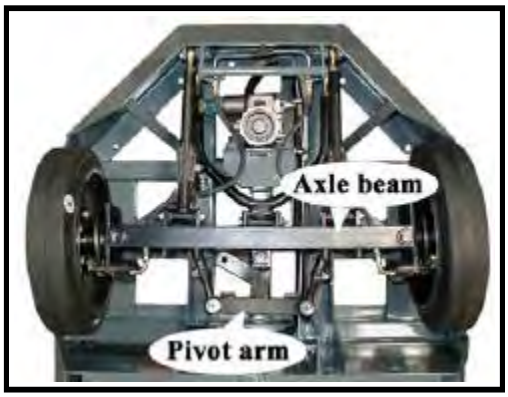

13. Loosen the ball joint clamps on the left and right tie rods.
14. Position a straight edge along the right side of the vehicle and adjust the right side tie rod so that the front wheel is parallel with the rear wheel.

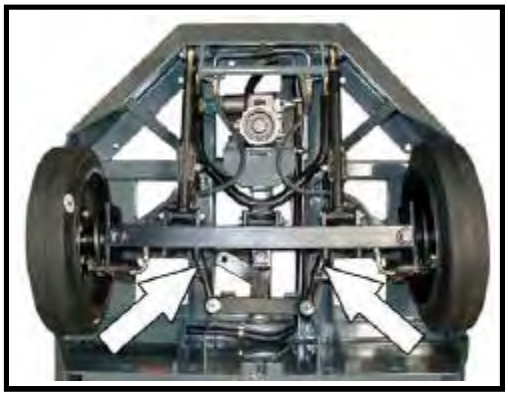

Tie rods

Toe In

15. Using a piece of chalk, mark a line around the center of both front tires.

    HINT: Hold the chalk on the center of the tire and rotate the tire to mark the line.

16. Measure the distance between the lines at the front of the tires.
17. Measure the distance between the lines at the rear of the tires.

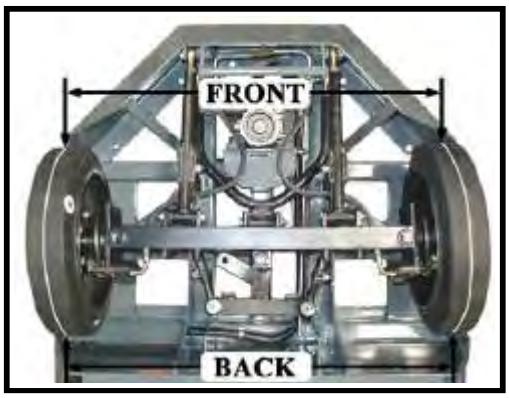

18. Adjust the left side tie rod so that the distance at the front and rear of the tires is the same.
19. Position the ball joint clamps as shown and tighten to 28-32 ft lbs.

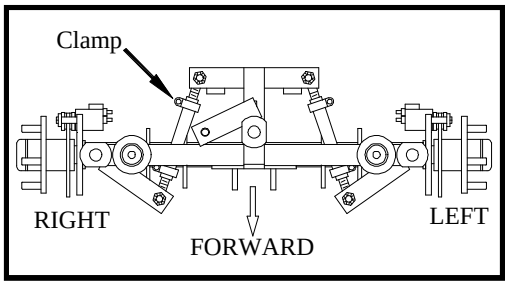

⚠WARNING

Clamps positioned so that they contact other components may result in steering failure and loss of control of the vehicle causing severe bodily injury and/or property damage.

20. Untie the steering wheel and reconnect the main battery connector.
21. Rotate the steering wheel from a full left turn to a full right turn and make sure that the ball joint clamps do not contact any other component.
22. Remove the blocks from behind the wheels and test drive the vehicle.

INSPECT BALL JOINTS

NOTE: A set of ball joints and/or rod ends will wear at the same rate. If a ball joint and or rod end is worn out, then all should be replaced as a set.

⚠WARNING

1. **Make sure the ON-OFF switch is in the "OFF" position, then remove the key.**
2. **Place the forward-reverse switch in the center "OFF" position.**
3. **If equipped with a hand operated park brake, set the brake.**
4. **Place blocks under the front wheels to prevent vehicle movement.**
5. **Unplug the main battery connector.**

⚠WARNING

Do not drive the vehicle while the steering wheel or front wheels are tied in position. Driving the vehicle while the steering wheel or front wheels tied in position may cause loss of control of the vehicle resulting in severe bodily injury and/or property damage.

6. Tie off the front wheels so that they cannot turn.
7. While watching the ball joints, rapidly rotate the steering wheel to the left and right.
8. If the ball joint housing moves up or down then the ball joint is worn out and should be replaced. Refer to section ***Replacing a Ball Joint*** for information regarding replacing ball joints.
9. Untie the front wheels.
10. Reconnect the main battery connector.
11. Remove the blocks from behind the wheels.
12. Test drive the vehicle.

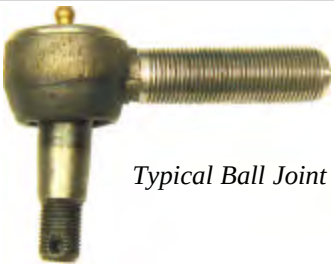

Typical Ball Joint

ADJUST THE STEERING GEAR

NOTE: In some vehicle configurations it may be necessary to remove the steering gear to perform this procedure. Refer to **Replace the Steering Gear** *for information regarding removing the steering gear.*

⚠WARNING

1. **Make sure the ON-OFF switch is in the "OFF" position, then remove the key.**
2. **Place the forward-reverse switch in the center "OFF" position.**
3. **If equipped with a hand operated park brake, set the brake.**
4. **Place blocks under the front wheels to prevent vehicle movement.**
5. **Unplug the main battery connector.**

⚠WARNING

Always use a lifting strap, hoist, and jack stands, of adequate capacity to lift and support the vehicle. Failure to use lifting and support devices of rated load capacity may result in serious bodily injury.

6. Raise the front of the vehicle and support with jack stands.
7. Disconnect the drag link from the pitman arm.

   NOTE: Refer to **Replace the Ball Joints** *section for information regarding removing the ball joint from the drag link.*

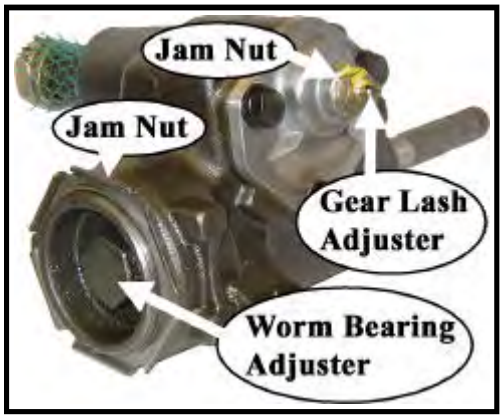

8. Loosen the gear lash jam nut and the worm bearing adjuster jam nut.
9. Unscrew the gear lash adjuster all of the way to the stop.
10. Loosen the worm bearing adjuster and then tighten just enough to remove all end play from the input shaft and then an additional 1/8 turn more.
11. While holding the worm bearing adjuster so that it cannot turn, tighten the worm bearing adjuster jam nut.
12. Find the center position of the steering shaft:
    A. Turn the steering shaft all of the way in one direction.
    B. While counting the rotations, turn the steering shaft all of the way in the opposite direction.
    C. Turn the steering shaft 1/2 the number of turns in the original direction.
13. While rotating the input shaft back and forth through its centered position, adjust the gear lash adjusting screw so that there is a slight drag as the steering gear is rotated through its centered position.
14. While holding the gear lash adjusting screw so that it cannot turn, tighten the gear lash adjusting screw jam nut.
15. Reconnect the main battery connector.
16. Remove the blocks from behind the wheels and test drive the vehicle.

REMOVE THE STEERING COLUMN S/N 178317 - 180285

⚠WARNING

1. **Make sure the ON-OFF switch is in the "OFF" position, then remove the key.**
2. **Place the forward-reverse switch in the center "OFF" position.**
3. **If equipped with a hand operated park brake, set the brake.**
4. **Place blocks under the front wheels to prevent vehicle movement.**
5. **Unplug the main battery connector.**

6. Remove the steering wheel cap.
7. Remove the three screws holding the steering wheel to the adaptor and remove the steering wheel.

⚠CAUTION

The steering wheel adaptor is soft metal. Do not use a hammer to remove the steering wheel adaptor.

8. Remove the adaptor nut and the adaptor. It may require a puller to remove the adaptor from the shaft.
9. Remove the steering column u-bolt holding the column to the frame.
10. Slide the column up off of the steering shaft.
11. Remove the setscrew holding the u-joint to the steering gear input shaft.
12. Pull the steering shaft off of the steering gear input shaft.
13. Install the shaft in reverse order.

    NOTE: Lightly lubricate the upper and lower steering column bushings.

14. Reconnect the main battery connector.
15. Remove the blocks from behind the wheels.
16. Release the parking brake and test drive the vehicle.

REMOVE THE STEERING COLUMN S/N STARTING 180286

⚠WARNING

1. **Make sure the ON-OFF switch is in the "OFF" position, then remove the key.**
2. **Place the forward-reverse switch in the center "OFF" position.**
3. **If equipped with a hand operated park brake, set the brake.**
4. **Place blocks under the front wheels to prevent vehicle movement.**
5. **Unplug the main battery connector.**

6. Remove the steering wheel cap.
7. Remove the three screws holding the steering wheel to the adaptor and remove the steering wheel.

⚠CAUTION

The steering wheel adaptor is soft metal. Do not use a hammer to remove the steering wheel adaptor.

8. Remove the adaptor nut and the adaptor. It may require a puller to remove the adaptor from the shaft.
9. Remove the steering column u-bolt holding the column to the frame.
10. Slide the column up off of the steering shaft.
11. Loosen the steering shaft coupler pinch bolt.
12. Pull the steering shaft off of the steering gear input shaft.
13. Install the shaft in reverse order.

    Lightly lubricate the upper and lower steering column bushings.

    Apply 94-430-07 thread locking compound on coupler pinch bolt and torque to 17 foot pounds.
14. Reconnect the main battery connector.
15. Remove the blocks from behind the wheels.
16. Release the parking brake and test drive the vehicle.

REPLACE THE STEERING GEAR S/N 178317 - 180285

⚠WARNING

1. **Make sure the ON-OFF switch is in the "OFF" position, then remove the key.**
2. **Place the forward-reverse switch in the center "OFF" position.**
3. **If equipped with a hand operated park brake, set the brake.**
4. **Place blocks under the front wheels to prevent vehicle movement.**
5. **Unplug the main battery connector.**

⚠WARNING

Always use a lifting strap, hoist, and jack stands, of adequate capacity to lift and support the vehicle. Failure to use lifting and support devices of rated load capacity may result in severe bodily injury.

6. Raise the front of the vehicle and support with jack stands.
7. Remove the setscrew holding the u-joint to the steering gear input shaft.
8. Remove the pitman arm.

⚠WARNING

Failure to support the steering gear will result in the steering gear falling out of the vehicle and could cause property damage and/or severe bodily injury.

9. Support the steering gear so that it cannot fall out of the vehicle.
10. Remove the bolts holding the steering gear to the vehicle frame and remove the steering gear from the vehicle.
11. Install in reverse order. Torque the pitman arm nut to 75-100 ft-lbs. Apply thread locking compound to the steering shaft allen head screws.
12. Reconnect the main battery connector.
13. Remove the blocks from behind the wheels.
14. Release the parking brake and test drive the vehicle.

REPLACE THE STEERING GEAR S/N STARTING 180286

⚠WARNING

1. **Make sure the ON-OFF switch is in the "OFF" position, then remove the key.**
2. **Place the forward-reverse switch in the center "OFF" position.**
3. **If equipped with a hand operated park brake, set the brake.**
4. **Place blocks under the front wheels to prevent vehicle movement.**
5. **Unplug the main battery connector.**

⚠WARNING

Always use a lifting strap, hoist, and jack stands, of adequate capacity to lift and support the vehicle. Failure to use lifting and support devices of rated load capacity may result in severe bodily injury.

6. Raise the front of the vehicle and support with jack stands.
7. Loosen the steering shaft coupler pinch bolt.
8. Remove the pitman arm.

⚠WARNING

Failure to support the steering gear will result in the steering gear falling out of the vehicle and could cause property damage and/or severe bodily injury.

9. Support the steering gear so that it cannot fall out of the vehicle.
10. Remove the bolts holding the steering gear to the vehicle frame and remove the steering gear from the vehicle.
11. Install in reverse order:
    Apply 94-430-07 thread locking compound on coupler pinch bolt and torque to 17 foot pounds.
    Torque the pitman arm nut to 75-100 foot pounds.
12. Reconnect the main battery connector.
13. Remove the blocks from behind the wheels.
14. Release the parking brake and test drive the vehicle.

CENTER THE STEERING GEAR

1. Rotate the input shaft clockwise until it stops.
2. While counting the rotations, rotate the input shaft counter clockwise until it stops.
3. Rotate the input shaft clockwise 1/2 the rotations counted in the previous step.
4. Mark the input and pitman shaft in relation to the housing.

PITMAN SHAFT ALIGNMENT

1. Center the steering gear. Refer to ***Center the Steeing Gear*** for information regarding centering the steering gear.
2. Install the pitman arm parallel with the input shaft orientated as shown in the illustration.

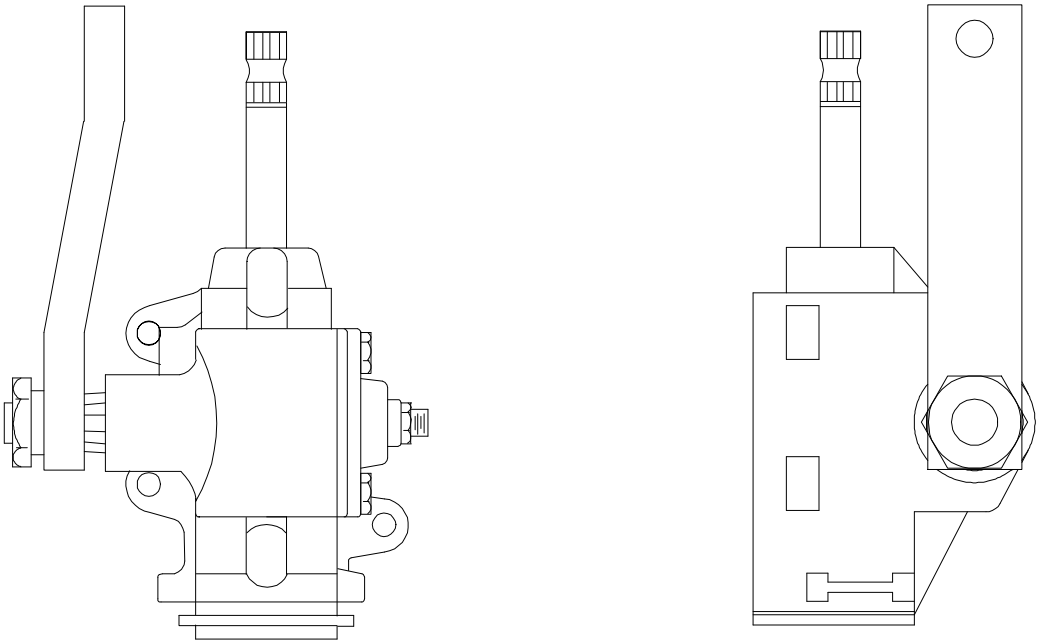

REPLACE THE BALL JOINTS, TIE RODS, AND DRAG LINK

NOTE: If a rod end or ball joint is worn out, we recommend replacing all of the ball joints and/or rod ends as a set.

Replacing a Ball Joint

⚠WARNING

1. **Make sure the ON-OFF switch is in the "OFF" position, then remove the key.**
2. **Place the forward-reverse switch in the center "OFF" position.**
3. **If equipped with a hand operated park brake, set the brake.**
4. **Place blocks under the front wheels to prevent vehicle movement.**
5. **Unplug the main battery connector.**

⚠WARNING

Always use a lifting strap, hoist, and jack stands, of adequate capacity to lift and support the vehicle. Failure to use lifting and support devices of rated load capacity may result in severe bodily injury.

6. Raise the front of the vehicle and support with jack stands.
7. Loosen the ball joint clamp on the steering sleeve.
8. Remove the cotter pin and ball joint nut.
9. Using a pickle fork, remove the ball joint from the steering arm.
10. Remove the ball joint from the steering sleeve.

    HINT: Count the number of turns required to remove the ball joint from the sleeve. This will make it easier to realign the wheels.

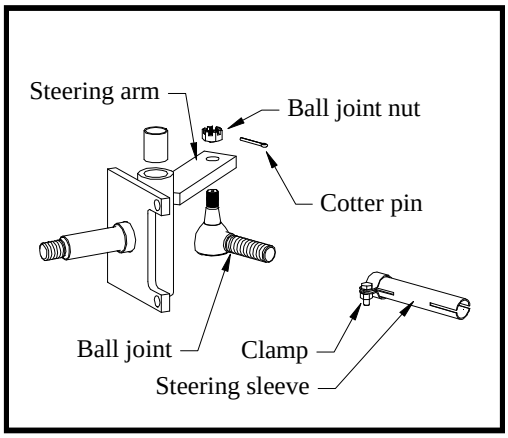

11. Install the new ball joint into the steering sleeve. Screw it into the sleeve the same number of turns counted in the previous step. Do not tighten the ball joint clamp at this time.
12. Install the ball joint into the steering arm. Tighten the ball joint nut to 40-45 ft-lbs. and install a new cotter pin.
13. Realign the front wheels.

    NOTE: Refer to the **Steering** *section for information regarding realignment of the front wheels.*

14. Lower the vehicle.
15. Reconnect the main battery connector., remove the blocks from the wheels, and test drive.

Replacing the Drag Link

The Drag Link is the linkage that connects the steering gear pitman arm to the steering knuckle. Refer to the illustration on the following page.

⚠WARNING

1. **Make sure the ON-OFF switch is in the "OFF" position, then remove the key.**
2. **Place the forward-reverse switch in the center "OFF" position.**
3. **If equipped with a hand operated park brake, set the brake.**
4. **Place blocks under the front wheels to prevent vehicle movement.**
5. **Unplug the main battery connector.**

⚠WARNING

Always use a lifting strap, hoist, and jack stands, of adequate capacity to lift and support the vehicle. Failure to use lifting and support devices of rated load capacity may result in severe bodily injury.

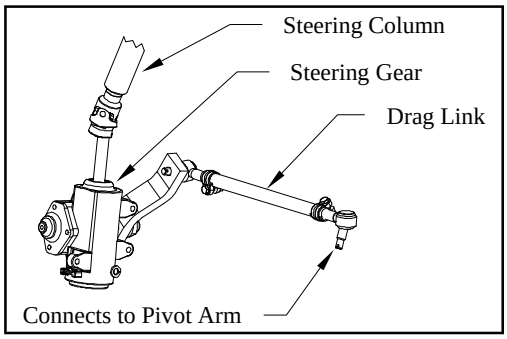

6. Raise the front of the vehicle and support with jack stands.
7. Remove the ball joints or rod ends from the steering knuckle and pitman arm.

   NOTE: Refer to the **Replacing the Ball Joints** *section for information regarding the removal of the ball joints or rod ends.*

8. Remove the drag link as an assembly.
9. Install in reverse order.
10. Realign the front wheels.

    NOTE: Refer to the **Steering** *section for information regarding realignment of the front wheels.*

11. Lower the vehicle.
12. Reconnect the main battery connector.
13. Remove the blocks from behind the wheels.
14. Test drive the vehicle.

Replacing the Tie Rod

The Tie Rod is the linkage that connects the two steering knuckles together. Refer to the illustration on the following page.

⚠WARNING

1. **Make sure the ON-OFF switch is in the "OFF" position, then remove the key.**
2. **Place the forward-reverse switch in the center "OFF" position.**
3. **If equipped with a hand operated park brake, set the brake.**
4. **Place blocks under the front wheels to prevent vehicle movement.**
5. **Unplug the main battery connector.**

⚠WARNING

Always use a lifting strap, hoist, and jack stands, of adequate capacity to lift and support the vehicle. Failure to use lifting and support devices of rated load capacity may result in severe bodily injury.

6. Raise the front of the vehicle and support with jack stands.
7. Remove the ball joints or rod ends from the steering knuckles.

   NOTE: Refer to the **Replacing the Ball Joints** *section for information regarding the removal of the ball joints or rod ends.*
8. Remove the tie rod as an assembly.
9. Install in reverse order.
10. Realign the front wheels.

    NOTE: Refer to the **Steering** *section for information regarding realignment of the front wheels.*
11. Lower the vehicle.
12. Reconnect the main battery connector.
13. Remove the blocks from behind the wheels.
14. Test drive the vehicle.

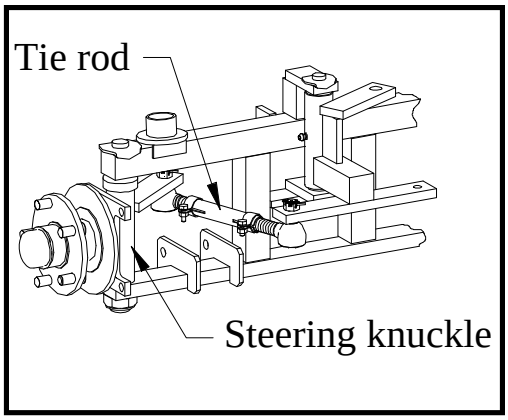

Front Axle Assembly (left side shown)

REPAIR THE STEERING GEAR

Disassembly

NOTE: The steering gear must be removed from the vehicle for this procedure. Refer to **Replace the Steering Gear** *section for information regarding removing the steering gear.*

NOTE: The steering gear is packed with grease. Only perform maintenance on the steering gear in an area that will contain any grease that may spill out of the steering gear when it is disassembled.

Refer to the illustration at the end of this section for a blown up view of the steering gear assembly.

1. Center the steering gear.
   A. Turn the steering shaft all of the way in one direction.
   B. While counting the rotation, turn the steering shaft all of the way in the opposite direction.
   C. Turn the steering shaft 1/2 the number of turns in the original direction.
2. Remove the worm bearing adjuster locking ring and the worm bearing adjuster.

3. Remove the side cover/pitman shaft assembly by removing the three side cover bolts and then pulling the assembly out of the housing.

   NOTE: The side cover/pitman shaft assembly normally does not have to be disassembled.

4. Remove the worm shaft and ball nut assembly from the bottom of the housing.
5. Remove the worm shaft seal.
6. Remove the pitman shaft seal.
7. Remove the upper worm bearing and bearing cup from the housing.

8. The ball nut assembly consists of two sets of ball bearings that recirculate in two channels in the ball nut housing. The bearings may fall out once the bearing guides are removed. Be careful not to lose any of the bearings.
9. Remove the ball guide clamps, ball guides and all of the ball bearings.
10. Remove the ball nut from the worm shaft.
11. Thoroughly clean and inspect all parts for signs of corrosion, damage or wear and replace as required.

Reassembly

1. Lightly lubricate all parts before reassembly.
2. Install a new worm shaft seal and pitman shaft seal into the housing.
3. Install the upper worm bearing cup.
4. Divide the ball bearing into two equal groups.
5. Position the ball nut onto the worm as shaft as shown in the illustration.
6. Insert the ball guides into the ball nut.
7. Insert each group of bearings into the ball guides.

   NOTE: Do not rotate the worm shaft while installing the bearings. This may cause one or more of the bearings to enter the crossover passage in the ball nut, causing improper operation.

8. Install the ball guide clamp.

9. Place the upper worm bearing on the worm shaft and install the worm shaft/ball nut assembly into the housing being careful not to damage the worm shaft seal.

10. Install the assembled worm bearing adjuster into the housing and tighten just enough to remove all play in the worm shaft.
11. Install, but do not tighten the worm bearing adjuster lock nut.
12. Rotate the worm shaft to center the ball nut in the housing.
13. Place a new gasket onto the housing and install the assembled pitman shaft/side cover onto the housing using two of the three mounting bolts.
14. Pack the steering gear with grease through the open side cover bolt hole and then install the bolt.
15. Adjust the steering gear.

    NOTE: Refer to **Adjust the Steering** *gear section for information regarding adjusting the steering gear.*

16. Once the adjustments are completed, make sure that the locking ring and jam nut are tight.

Exploded View of Steering Gear

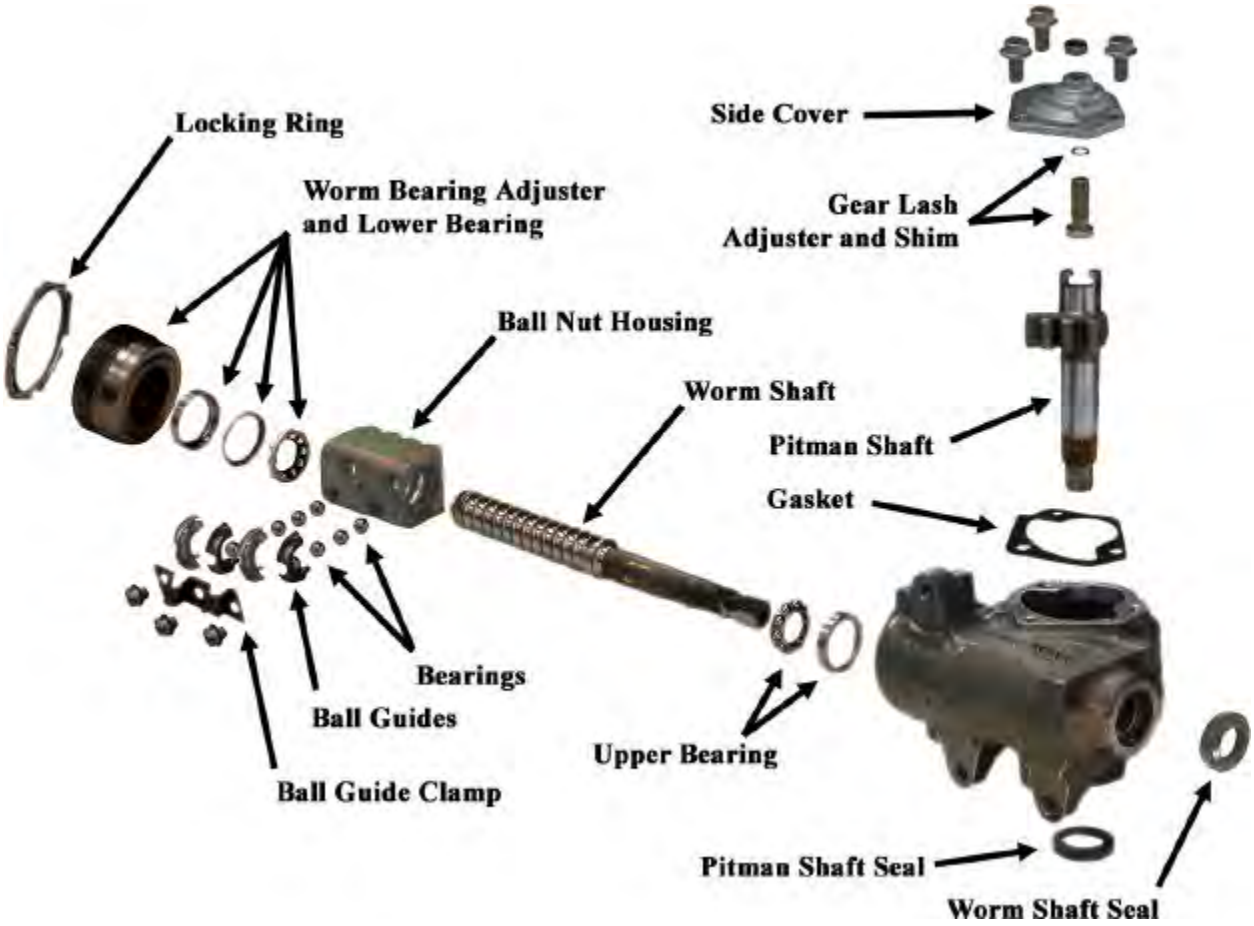

TAYLOR - DUNN

Brake Service

TABLE OF CONTENTS

INSPECT THE SERVICE BRAKE

Disc Brake Pads

⚠WARNING

Current Taylor-Dunn® brakes are asbestos free. However, there is the possibility that the original brakes were replaced with aftermarket parts containing asbestos. Since this possibility exists, all brake parts should be handled as if they contain asbestos. Refer to appendix C for recommended handling precautions.

NOTE: The brake pad must be removed to accurately measure the lining thickness. Refer to **Replace the Front or Rear Brake Pads** *section for information on removing the brake pads.*

Measure the brake pad lining at the thinnest point on the pad. If the brake pad lining is 1/16-inch or less then the brake pad must be replaced.

It is recommended to replace the left and right side brake pads as a set.

Disc Brake Rotor

⚠WARNING

Current Taylor-Dunn® brakes are asbestos free. However, there is the possibility that the original brakes were replaced with aftermarket parts containing asbestos. Since this possibility exists, all brake parts should be handled as if they contain asbestos. Refer to appendix C for recommended handling precautions.

NOTE: The front brake rotor is an integral part of the front hub. If the brake rotor is worn beyond its service limits, then the front hub must be replaced. Refer to **Front Axle Service** *for information on replacing the front hub.*

NOTE: Depending on the rear axle configuration, the rear brake rotor may be an integral part of the rear axle. If the brake rotor is worn beyond its service limits, then the rear axle must be replaced. Refer to **Transmission** *section for information regarding replacing the rear axle*

NOTE: The wheel must be removed to accurately measure the rotor thickness. Refer to **Tires and Wheels** *section for information on removing the wheel.*

1. Measure the run out of the rotor at its maximum diameter. If the run out exceeds 0.005, then the rotor must be machined. Do not machine the rotor beyond its service limits.

   NOTE: A bent axle or damaged rear axle could cause excessive brake rotor run out.

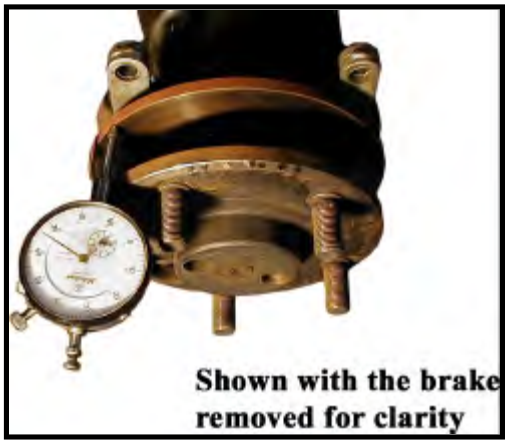

2. Measure the thickness of the brake rotor in 3 places. If the brake rotor thickness is less than 0.20-inches, then the rotor must be replaced.

⚠WARNING

Do not use a rotor that is worn beyond its service limits. A rotor worn beyond its service limits could fail and cause loss of brakes resulting in severe bodily injury and/or property damage.

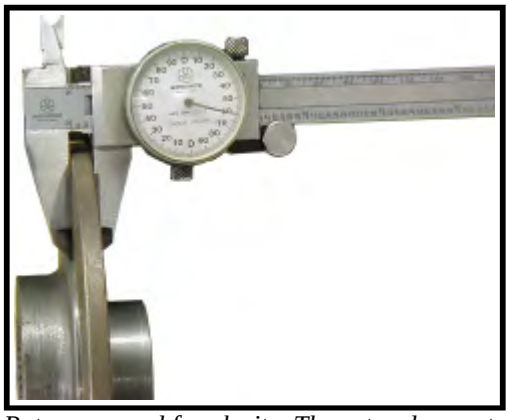

Rotor removed for clarity. The rotor does not have to be removed for this procedure.

INSPECT THE AUTOMATIC PARKING BRAKE

The parking brake is located inside of the motor and is electromagnetically operated. To inspect operation of the parking brake, disconnect the harness to the parking brake and push the vehicle to confirm that the brake is applied.

The rubber band dust seal should fit snug around the brake.

Remove the dust band seal and Inspect the seal for any indications of cracking or fatigue.

Block the wheels to prevent the vehicle from moving and energize the brake. Using a feeler gauge, measure the clearance between the brake friction disc and the armature. The maximum air gap allowed is 0.7mm (0.0276 inches). If the air gap exceeds the maximum gap allowed then the brake assembly should be replaced.

The Parking brake coil resistance is 20 Ohms.

NOTE: In normal operation, the parking brake is applied only after the vehicle has stopped moving so there should be little or no wearing of the parking brake lining. The lining should last for the life of the vehicle. Excessive wear of the parking brake lining is an indication of improper use of the vehicle such as turning the vehicle off while the vehicle is still in motion.

ADJUST THE AUTOMATIC PARKING BRAKE

The parking brake is electromagnetically operated and is either fully applied or off, there are no adjustments. The brake is OFF when power is applied to the brake.

ADJUST THE SERVICE BRAKES

The hydraulic disc brake system is automatically adjusted. A low brake pedal or lack of braking power could be caused by:

- Brake fluid level low in the master cylinder. See ***Check the Master Cylinder Fluid*** section.
- Air in the brake lines. See ***Bleed the Brakes*** section.
- Worn brake pads. See ***Inspect the Service Brake*** section.
- Worn brake rotor. See ***Inspect the Service Brake*** section.
- Binding brake pedal linkage.

If you are experiencing a low brake pedal or lack of braking power, the entire brake system should be inspected.

ADJUST THE BRAKE LINKAGE

⚠WARNING

1. **Make sure the ON-OFF switch is in the "OFF" position, then remove the key.**
2. **Place the forward-reverse switch in the center "OFF" position.**
3. **Place blocks under the front wheels to prevent vehicle movement.**
4. **Unplug the main battery connector.**

5. Tighten the master cylinder push rod pivot bolt so that the push rod may pivot freely with no side play. See the illustration to the right.

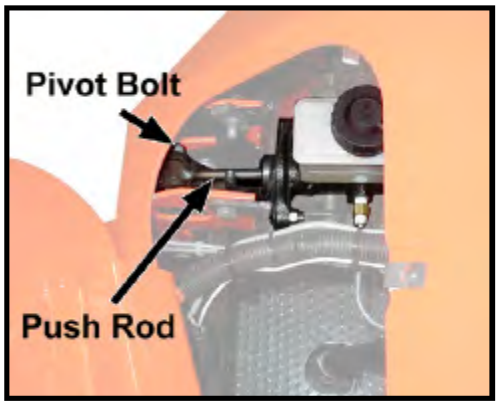

6. Tighten the spring mounting bolt and the pedal stop bolt so that one thread shows beyond the locknut. See arrows in the illustraition to the left.

7. Tight the brake pedal pivot bolt so that the brake pedal moves freely with no side play.
8. Reconnect the main battery connector.
9. Remove blocks from behind the wheels.
10. Test drive the vehicle.

CHECK MASTER CYLINDER FLUID

⚠WARNING

Do not ingest brake fluid or allow contact with skin or eyes. Always wear protective clothing and a face shield when working with or around brake fluid.

SKIN CONTACT

Flush area immediately with water for several minutes. If a rash or skin irritation develops, get medical attention immediately.

EYE CONTACT

Immediately flush the eye with water for 15 minutes and call physician.

INGESTION

Get medical attention immediately.

⚠WARNING

1. **Make sure the ON-OFF switch is in the "OFF" position, then remove the key.**
2. **Place the forward-reverse switch in the center "OFF" position.**
3. **Place blocks under the front wheels to prevent vehicle movement.**
4. **Unplug the main battery connector.**

5. Thoroughly clean the area around the master cylinder cap.
6. Remove the master cylinder cap.
7. If the fluid in the master cylinder is contaminated then the entire brake system must be flushed. Refer to ***Bleed the Brakes*** for information regarding flushing the brake system.
8. Fill with brake fluid from a new sealed container to within 1/4-inch of the top of the master cylinder chamber and reinstall the cap.
9. Reconnect the main battery connector.
10. Remove blocks from behind the wheels.
11. Test drive the vehicle.

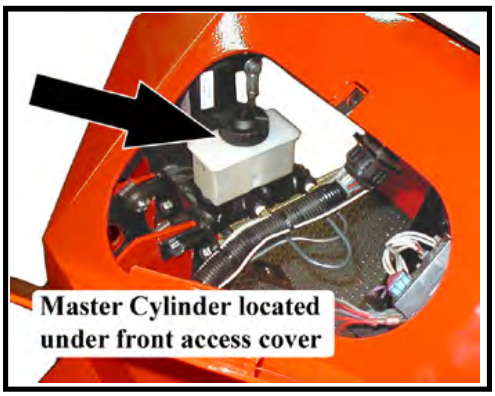

⚠WARNING

- **Only use DOT 3 brake fluid from a new sealed container.**
- **DOT 3 brake fluid is corrosive and will damage paint finishes.**
- **Dispose of brake fluid in accordance with local state and federal regulations.**
- **Read and follow all warnings on the brake fluid container.**

BLEED THE BRAKES

⚠WARNING

Do not ingest brake fluid or allow contact with skin or eyes. Always wear protective clothing and a face shield when working with or around brake fluid.

SKIN CONTACT

Flush area immediately with water for several minutes. If a rash or skin irritation develops, get medical attention immediately.

EYE CONTACT

Immediately flush the eye with water for 15 minutes and call physician.

INGESTION

Get medical attention immediately.

⚠WARNING

1. **Make sure the ON-OFF switch is in the "OFF" position, then remove the key.**
2. **Place the forward-reverse switch in the center "OFF" position.**
3. **Place blocks under the front wheels to prevent vehicle movement.**
4. **Unplug the main battery connector.**

NOTE: Start this procedure at the wheel furthest from the master cylinder, then work toward the wheel closest to the master cylinder.

5. Thoroughly clean the area around the master cylinder cap and remove the cap.
6. Add brake fluid from a new sealed container to the master cylinder. Fill to 1/4" from the top of the master cylinder chamber.
7. The master cylinder fluid level will drop as the brakes are bled. Periodically check and fill the master cylinder during this procedure. Do not allow the fluid level in the master cylinder to drop too low as this will allow air into the brake lines.

8. Attach a clear hose to the bleeder valve on the brake cylinder that is to be bled. Route the hose into a clear container for waste brake fluid.
9. Pump the brake pedal a few times and then press and hold light pressure to the brake pedal.
10. Open the bleeder valve on the hydraulic brake body.
11. Depress the foot pedal to the floor and then close the bleeder valve. Do not release pressure on the brake pedal until the bleeder valve is closed.
12. Slowly release the foot pedal, allowing it to return to its released position.

NOTE: Check and fill the master cylinder frequently during the bleeding process. Do not allow the fluid level in the master cylinder to drop low enough to allow air to enter the brake lines. If air enters the brake lines during the bleeding process, then you will have to start again from the beginning.

13. Repeat the above steps until you are sure that all of the air is expelled from the brake line. Any air bubbles that can be seen in the clear hose attached to the bleeder is an indication that there is still air in the brake lines.
14. Repeat this process with each of the other wheels.

NOTE: When finished, top off the master cylinder with fluid. See **Check Master Cylinder Fluid** *for information on filling the master cylinder.*

15. Reconnect the main battery connector.
16. Remove the blocks from behind the wheels.
17. Test drive the vehicle.

⚠WARNING

- **Only use DOT 3 brake fluid from a new sealed container.**
- **DOT 3 brake fluid is corrosive and will damage paint finishes.**
- **Dispose of brake fluid in accordance with local state and federal regulations.**
- **Read and follow all warnings on the brake fluid container.**

FLUSH THE BRAKE SYSTEM

⚠WARNING

1. **Make sure the ON-OFF switch is in the "OFF" position, then remove the key.**
2. **Place the forward-reverse switch in the center "OFF" position.**
3. **Place blocks under the front wheels to prevent vehicle movement.**
4. **Unplug the main battery connector.**

5. Raise the rear wheels off of the ground and support with jack stands.

⚠WARNING

Always use a lifting strap, hoist, and jack stands, of adequate capacity to lift and support the vehicle. Failure to use lifting and support devices of rated load capacity may result in severe bodily injury.

6 If equipped with front brakes, raise the front wheels off of the ground and support with jack stands.
7 Release the park brake.
8 Remove both rear wheels and, if equipped with front brakes, the front wheels. Refer to ***Tires and Wheels*** section for information regarding removing the wheels.
9 Remove the wheel cylinders from each axle. Refer to ***Replace the Wheel Cylinder*** section for information regarding removing the wheel cylinder.
10 Attach a clear hose to the bleeder valve on each of the wheel cylinders and route the hoses into a container for waste brake fluid.
11 Position the wheel cylinders so that the bleeder screw is pointing to the ground and open all bleeder screws.
12 Pump the master cylinder until all fluid has been pumped from the brake lines and all wheel cylinders.
13 Close all bleeder screws.
14 Fill the master cylinder with fluid.
15 Open one of the bleeder screws and pump the master cylinder until all fluid has been pumped from the master cylinder and close the bleeder screw.
16 Repeat the above two steps for each wheel cylinder.
17 Reinstall the wheel cylinders and bleed the brakes. Refer to ***Bleed the Brakes*** for information regarding bleeding the brakes.
18 Install the wheels and lower the vehicle to the ground.
19 Reconnect the main battery connector.
20. Test drive the vehicle.

REPLACE FRONT BRAKE PADS

NOTE: It is recommended that both the left and right brake pads be replaced as a set.

⚠WARNING

Current Taylor-Dunn® brakes are asbestos free. However, there is the possibility that the original brakes were replaced with aftermarket parts containing asbestos. Since this possibility exists, all brake parts should be handled as if they contain asbestos. Refer to appendix C for recommended handling precautions.

NOTE: Installing new brake pads will raise the brake fluid level in the master cylinder.

⚠WARNING

1. **Make sure the ON-OFF switch is in the "OFF" position, then remove the key.**
2. **Place the forward-reverse switch in the center "OFF" position.**
3. **Place blocks under the front wheels to prevent vehicle movement.**
4. **Unplug the main battery connector.**

5. Thoroughly clean the area around the master cylinder cap.
6. Remove fluid from the master cylinder until it is 1/2 full.

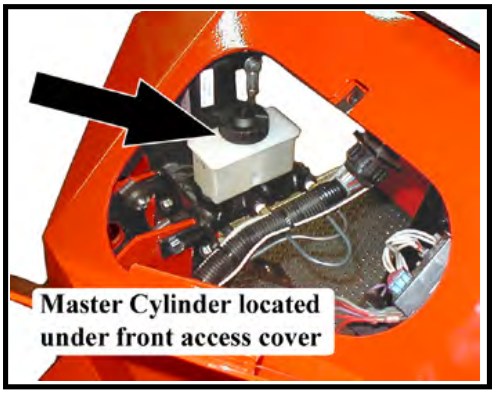

7. Raise the front of the vehicle and support with jack stands.

⚠WARNING

Always use a lifting strap, hoist, and jack stands, of adequate capacity to lift and support the vehicle. Failure to use lifting and support devices of rated load capacity may result in severe bodily injury.

8. Remove the tire/wheel assembly. Refer to ***Tires and Wheels*** section for information on removing the tire and wheel assembly.

NOTE: Refer to the illustration above for the following steps.

9. Remove the caliper bolts and discard the lock nuts and brake pads.
10. Remove the bronze bushings from the mounting bracket and discard the bushings.
11. Inspect the brake rotor. See ***Inspect the Service Brakes*** section for information regarding inspecting the brake rotor.
12. Inspect the spacers and replace if any wear or damage is found.
13. Install new spacer bushings in the mounting bracket.
14. Install new brake pads in reverse order. Torque the mounting bolts to 11 ft-lbs.
15. Repeat this procedure for the other wheel.
16. Install the tire/wheel assembly and lower the vehicle to the ground.
17. Fill the master cylinder to the proper level. Refer to ***Check Master Cylinder Fluid*** section for information on the proper master cylinder fluid level.
18. Reconnect the main battery connector.
19. Remove the blocks from behind the wheels.
20. Test drive the vehicle.

REPLACE REAR BRAKE PADS

Hydraulic Disc

⚠WARNING

Current Taylor-Dunn® brakes are asbestos free. However, there is the possibility that the original brakes were replaced with aftermarket parts containing asbestos. Since this possibility exists, all brake parts should be handled as if they contain asbestos. Refer to appendix C for recommended handling precautions.

NOTE: It is recommended that both the left and right brake pads be replaced as a set.

⚠WARNING

1. **Make sure the ON-OFF switch is in the "OFF" position, then remove the key.**
2. **Place the forward-reverse switch in the center "OFF" position.**
3. **Place blocks under the front wheels to prevent vehicle movement.**
4. **Unplug the main battery connector.**

NOTE: Installing new brake pads will raise the brake fluid level in the master cylinder.

5. Thoroughly clean the area around the master cylinder cap.
6. Remove fluid from the master cylinder until it is 1/2 full.

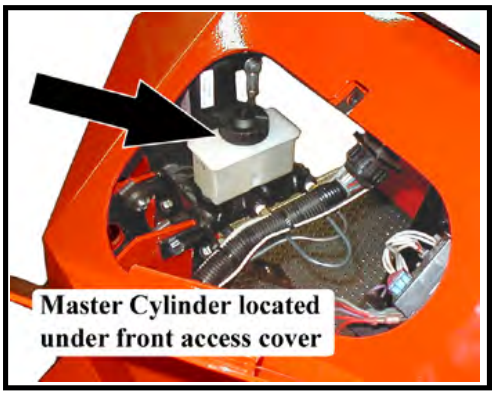

7. Raise the rear of the vehicle and support with jack stands.
8. Remove the tire/wheel assembly.

⚠WARNING

Always use a lifting strap, hoist, and jack stands, of adequate capacity to lift and support the vehicle. Failure to use lifting and support devices of rated load capacity may result in severe bodily injury.

NOTE: Refer to **Tires and Wheels** *section for information on removing the tire and wheel assembly.*

9. Release the park brake (wheel brake only).
10. Remove the brake body bolts and discard the lock nuts and brake pads.
.11 Remove the spacer bushings from the mounting bracket and discard.
.12 Inspect the brake rotor. Refer to ***Inspect the Service Brake*** section for information regarding inspecting the brake rotor.
13. Inspect the spacers and replace if any wear or damage is found.
14. Install new spacer bushings in the mounting bracket.
15. Back off the parking brake adjustment (wheel park brake only).
16. Install new brake pads in reverse order. Torque the mounting bolts to 11 ft-lbs.
17. Repeat this procedure for the other wheel.
18. Install the tire/wheel assembly and lower the vehicle to the ground.
19. Fill the master cylinder to the proper level. Refer to ***Check Master Cylinder Fluid*** section for information regarding the correct master cylinder fluid level.
20. Reconnect the main battery connector.
21. Remove the blocks from behind the wheels.
22. Test drive the vehicle.

REPLACE THE WHEEL CYLINDER

⚠WARNING

Do not ingest brake fluid or allow contact with skin or eyes. Always wear protective clothing and a face shield when working with or around brake fluid.

SKIN CONTACT

Flush area immediately with water for several minutes. If a rash or skin irritation develops, get medical attention immediately.

EYE CONTACT

Immediately flush the eye with water for 15 minutes and call physician.

INGESTION

⚠WARNING

1. **Make sure the ON-OFF switch is in the "OFF" position, then remove the key.**
2. **Place the forward-reverse switch in the center "OFF" position.**
3. **Place blocks under the front wheels to prevent vehicle movement.**
4. **Unplug the main battery connector.**

⚠WARNING

Always use a lifting strap, hoist, and jack stands, of adequate capacity to lift and support the vehicle. Failure to use lifting and support devices of rated load capacity may result in severe bodily injury.

5. Raise the wheel off of the ground and support with jack stands.
6. Remove the tire/wheel assembly. Refer to ***Tires and Wheels*** section for information on removing the tire and wheel assembly.

⚠WARNING

Current Taylor-Dunn® brakes are asbestos free. However, there is the possibility that the original brakes were replaced with aftermarket parts containing asbestos. Since this possibility exists, all brake parts should be handled as if they contain asbestos. Refer to appendix C for recommended handling precautions.

7. Thoroughly clean the area around the brake body.
8. Remove the brake body bolts and discard the lock nuts.
9. Inspect the brake rotor. Refer to ***Inspect the Service Brake*** section for information regarding inspecting the brake rotor.
10. Disconnect the brake hose from the brake body.
11. Install the new brake body assembly in reverse order.
    - Use teflon tape thread sealant on the brake hose fitting.
    - Torque the brake body bolts to 11 ft-lbs.
12. Bleed the brakes. Refer to ***Bleed the Brakes*** section for information regarding bleeding the brakes.
13. Reconnect the main battery connector.
14. Lower the wheel to the ground.
15. Remove the blocks from behind the wheels.
16. Test drive the vehicle.

REPLACE THE MASTER CYLINDER

⚠WARNING

Do not ingest brake fluid or allow contact with skin or eyes. Always wear protective clothing and a face shield when working with or around brake fluid.

SKIN CONTACT

Flush area immediately with water for several minutes. If a rash or skin irritation develops, get medical attention immediately.

EYE CONTACT

Immediately flush the eye with water for 15 minutes and call physician.

INGESTION

Get medical attention immediately.

⚠WARNING

- **Only use DOT 3 brake fluid from a new sealed container.**
- **DOT 3 brake fluid is corrosive and will damage paint finishes.**
- **Dispose of brake fluid in accordance with local state and federal regulations.**
- **Read and follow all warnings on the brake fluid container.**

⚠WARNING

1. **Make sure the ON-OFF switch is in the "OFF" position, then remove the key.**
2. **Place the forward-reverse switch in the center "OFF" position.**
3. **Place blocks under the front wheels to prevent vehicle movement.**
4. **Unplug the main battery connector.**

NOTE: Most vehicle configurations do not require lifting the vehicle to remove the master cylinder. Lifting the vehicle may not be required.

5. If required, raise the vehicle and support with jack stands.
6. Place a drain pan under the master cylinder.
7. Disconnect the brake line(s) to the master cylinder and pump out the fluid in the master cylinder by depressing the pedal several times.
9. Remove the master cylinder bolts and remove the master cylinder from the vehicle.
9. Install in reverse order.
10. Fill the master cylinder with brake fluid from a sealed container.
11. Pump the brake pedal a short distance of one to two inches until no bubbles are seen coming from the inlet ports inside of the master cylinder chamber.
11. If the vehicle was raised, lower it to the ground.
13. Bleed the brakes. refer to ***Bleed the Brakes*** section for information regarding bleeding the brakes.
14. Reconnect the main battery connector.
15. Remove the blocks from behind the wheels.
16. Test drive the vehicle.

REPAIR THE MASTER CYLINDER

NOTE: Hydraulic brake system components must be kept clean. Make sure your work area is free from dirt and debris and will contain any brake fluid spills.

Remove the master cylinder from the vehicle. See ***Replace the Master Cylinder*** section .

Drain all fluid from the master cylinder and discard.

Remove the rubber boot.

Depress the plunger and remove the plunger spring clip retainer.

Pull the plunger and all seals out of the master cylinder bore.

Thoroughly clean, inspect and replace parts as required.

If any damage is found in the bore of the master cylinder then it must be replaced.

Lubricate all parts with clean brake fluid from a sealed container.

Reassemble in reverse order.

If the master cylinder is not to be immediately installed onto a vehicle, plug the brake line fitting outlets to prevent any contaminates from entering the master cylinder.

Throttle Linkage

TABLE OF CONTENTS

THROTTLE LINKAGE ADJUSTMENTS

⚠WARNING

1. **Make sure the ON-OFF switch is in the "OFF" position, then remove the key.**
2. **Place the forward-reverse switch in the center "OFF" position.**
3. **If equipped with a hand operated park brake, set the brake.**
4. **Place blocks under the front wheels to prevent vehicle movement.**
5. **Unplug the main battery connector.**

6. Adjust the accelerator pedal arm pivot nut so that there is 0.005" clearance between the nut and flat washer.
7. Make sure the accelerator pedal arm is in the fully released position. See arrow 1 in the illustration.
8. Adjust the throttle rod so that the accelerator module arm has 0.010" clearance between the arm and the accelerator module bracket. See arrow 2 in the illustration.
9. Reconnect the main battery connector.
10. Remove the blocks from the wheels and test drive the vehicle.

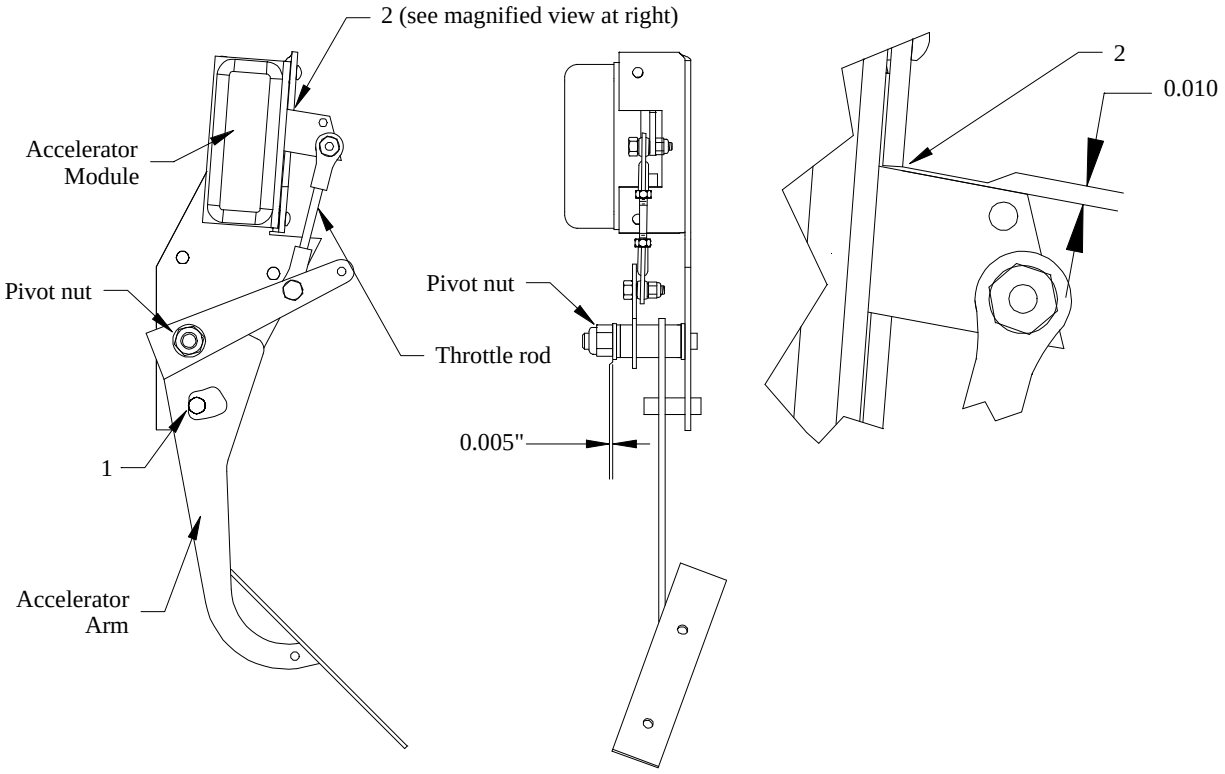

Transmission

TABLE OF CONTENTS

CHECK OIL LEVEL

The oil flows freely between the main gear case (3rd member) and the primary reduction gear case. It is only necessary to check the oil level of the 3rd member.

Park the vehicle on a level surface.

⚠WARNING

1. **Make sure the ON-OFF switch is in the "OFF" position, then remove the key.**
2. **Place the forward-reverse switch in the center "OFF" position.**
3. **If equipped with a hand operated park brake, set the brake.**
4. **Place blocks under the front wheels to prevent vehicle movement.**
5. **Unplug the main battery connector.**

5. Place an oil drain pan underneath the 3rd member.
6. Remove the fill/level plug.
7. The oil level should be very close to the bottom of the level plug opening.
   a. If the oil level is below the bottom of the opening, add oil as required until level with the bottom of the opening. Refer to the ***Lube Chart*** section for information regarding type of oil.
   b. If oil comes out of the opening, allow to drain until level with the bottom of the opening.
8. Replace the fill/level plug.
9. Reconnect the main battery connector.
10. Remove the blocks from the wheels.
11. Test drive the vehicle.

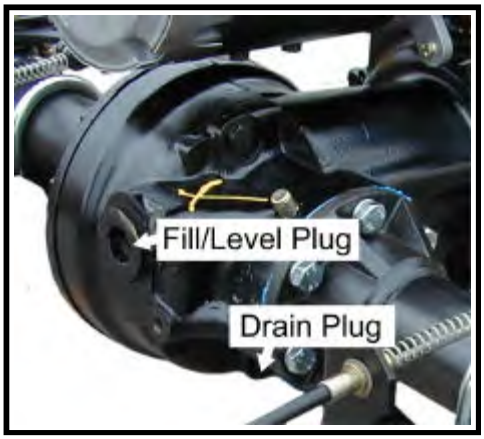

CHANGE OIL

⚠WARNING

1. **Make sure the ON-OFF switch is in the "OFF" position, then remove the key.**
2. **Place the forward-reverse switch in the center "OFF" position.**
3. **If equipped with a hand operated park brake, set the brake.**
4. **Place blocks under the front wheels to prevent vehicle movement.**
5. **Unplug the main battery connector..**

5. Raise the rear of the vehicle and support with jack stands.
6. Place a four quart drain pan under the drive assembly.
7. Remove the drain plugs from the differential case and gear case.
8. Once the oil has drained, replace the drain plugs and lower the vehicle to the ground.
9. Remove the fill/level plug and fill the differential up to the bottom of the level plug opening. Refer to the ***Lube Chart*** section for information regarding type of oil.
10. Replace the fill plug.
11. Reconnect the main battery connector.
12. Remove the blocks from the wheels.
13. Test drive the vehicle

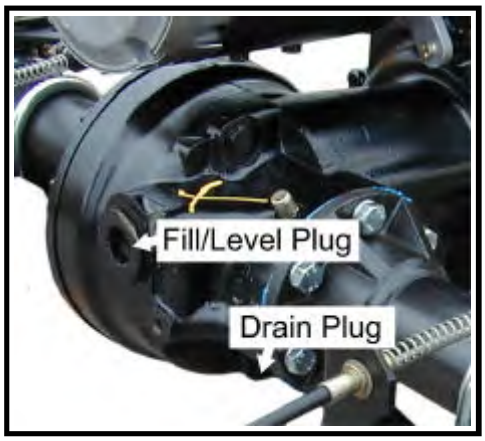

MOTOR REMOVAL AND INSTALLATION

NOTE: Some applications will require removing the drive assembly from the vehicle to remove the motor. Refer to **Removing and Installing the Drive Assembly** *for information on removing the drive assembly.*

⚠WARNING

1. **Make sure the ON-OFF switch is in the "OFF" position, then remove the key.**
2. **Place the forward-reverse switch in the center "OFF" position.**
3. **If equipped with a hand operated park brake, set the brake.**
4. **Place blocks under the front wheels to prevent vehicle movement.**
5. **Unplug the main battery connector.**

5. Remove the wires from the motor.

   NOTE: Label the motor wires with the number of the motor terminal before they are removed from the motor.

6. If equipped, remove the motor support bracket u-bolt (only used on larger motors).
7. Remove the motor mounting bolts and slide the motor off of the input shaft.
8. Install the motor in reverse order. Make sure that the motor coupler o-ring is properly installed on the transmission input shaft.

   NOTE: Apply a light coating of part number 94-421-34 moly paste grease to the splines on the transmission input shaft

9 Reconnect the main battery connector.

10. Remove the blocks from behind the wheels.
11. Test drive the vehicle.

Support bracket u-bolt

Transmission input shaft

REAR HUB OR ROTOR

NOTE: The torque specification for the axle hub bolt is 275 ft-lbs. An impact wrench will be required to remove the bolt.

⚠WARNING

1. **Make sure the ON-OFF switch is in the "OFF" position, then remove the key.**
2. **Place the forward-reverse switch in the center "OFF" position.**
3. **If equipped with a hand operated park brake, set the brake.**
4. **Place blocks under the front wheels to prevent vehicle movement.**
5. **Unplug the main battery connector.**

⚠WARNING

Always use a lifting strap, hoist, and jack stands, of adequate capacity to lift and support the vehicle. Failure to use lifting and support devices of rated load capacity may result in severe bodily injury.

5. Raise the wheel off of the ground.
6. Remove the tire/wheel assembly, Refer to ***Tires and Wheels*** section for information regarding removing the tire/wheel assembly.
7. Remove the axle hub bolt and washer and remove the hub from the axle.
8. Remove the outer brake pad. Refer to section ***Brake Service*** for information regarding removing the brake pads.
9. Remove the rotor.
10. Install in reverse order.
    a. Lightly grease the axle splines.
    b. Refer to section ***Brake Service*** for information regarding installing the brake pads.
    c. Torque the axle hub bolt to 275 ft-lbs.
    d. Refer to ***Tires and Wheels*** section for information regarding installing the tire/wheel assembly.
11. Lower the wheel to the ground.
12. Reconnect the main battery connector.
13. Remove the blocks from behind the wheels and test drive the vehicle.

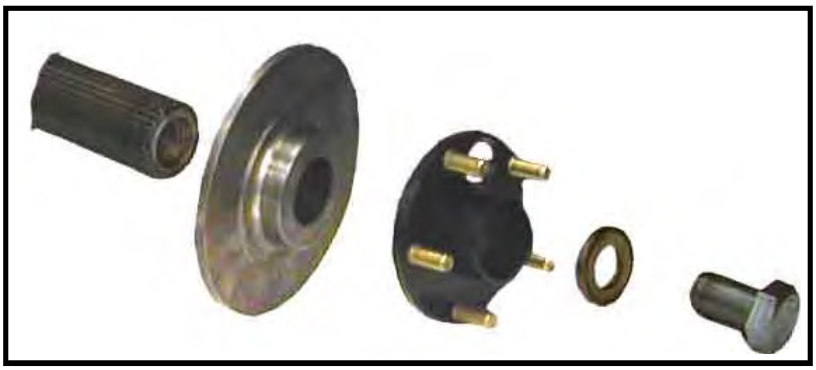

REMOVING AND INSTALLING THE REAR AXLES

The oil level in the housing is above the bottom of the axle flange. To minimize oil spills, raise the side of the vehicle high enough so that the oil level is below the bottom of the axle flange. If both axles are to be removed, you must drain all of the oil from the housing.

NOTE: This procedure does not require that the rear end or drive assembly be removed from the vehicle.

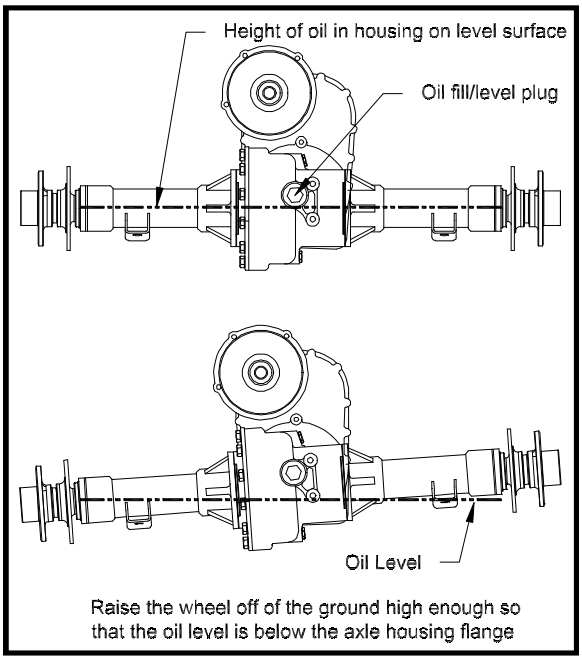

Raise the wheel off of the ground high enough so that the oil level is below the axle housing flange

⚠WARNING

1. **Make sure the ON-OFF switch is in the "OFF" position, then remove the key.**
2. **Place the forward-reverse switch in the center "OFF" position.**
3. **If equipped with a hand operated park brake, set the brake.**
4. **Place blocks under the front wheels to prevent vehicle movement.**
5. **Unplug the main battery connector.**

5. If required, drain the oil from the 3rd member.

⚠WARNING

Always use a lifting strap, hoist, and jack stands, of adequate capacity to lift and support the vehicle. Failure to use lifting and support devices of rated load capacity may result in severe bodily injury.

6. Raise the rear of the vehicle and support with jack stands.
7. Remove the tire and wheel assembly. Refer to section ***Tires and Wheels*** for information regarding removing the tire and wheel assembly.
   a. If the axle shaft, hub or bearing is to be replaced then remove the hub bolt, wheel hub and disc rotor at this time.
8. Remove the four bolts attached to the axle retaining plate.

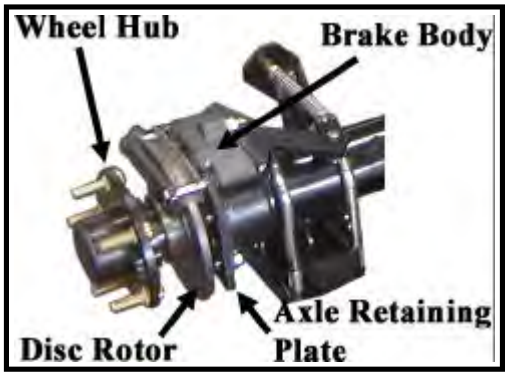

9. Remove the axle retaining plate and brake body assembly as one unit.
10. Secure the brake body assembly, do not let it hang by the brake hose.
11. Pull the axle out of the housing.
12. Inspect all bearings for roughness or play, replace as needed.
13. Install in reverse order, lubricate the o-ring.

    NOTE: Be sure not to damage the o-ring.
14. Use new bolts for the axle retaining plate.

⚠WARNING

The axle retaining plate bolts have a pre-applied thread locking compound. They are intended for one time use only. If removed they must be replaced. Reusing the original bolts could cause loss of brakes resulting in severe bodily injury and/or property damage.

Refer to section Rear Brakes in Illustrated Parts for the part number of the bolt.

15. If the wheel hub was removed, install the hub and rotor. Torque the hub bolt to 275 ft-lbs.
16. Fill with oil to the level of the fill plug threads. Refer to ***Changing the Differential Oil.***
17. Lower the vehicle.
18. Reconnect the main battery connector.
19. Remove the blocks from behind the wheels.
20. Test drive the vehicle.

TRANSMISSION ASSEMBLY

Remove and Install

⚠WARNING

1. **Make sure the ON-OFF switch is in the "OFF" position, then remove the key.**
2. **Place the forward-reverse switch in the center "OFF" position.**
3. **If equipped with a hand operated park brake, set the brake.**
4. **Place blocks under the front wheels to prevent vehicle movement.**
5. **Unplug the main battery connector.**

5. Disconnect the main motor cables and unplug the encoder and electric brake cables.
6. If equipped with a hand park brake, disconnect the park brake cables from the brake arm and the swing arm mount.
7. Disconnect brake hoses from the brake calipers.

NOTE: Illustrations show the dual brake body drive. This procedure is the same for the single brake body drive. The single brake body would be located at the top of the axle.

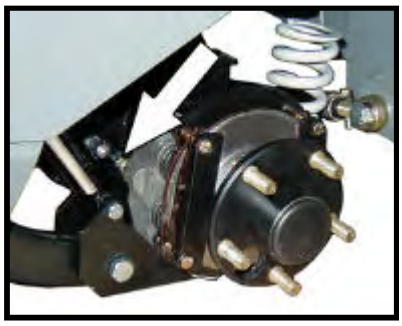

8. Remove the lower shock bolts.

9. Remove the bolt holding the panard bar to the frame.

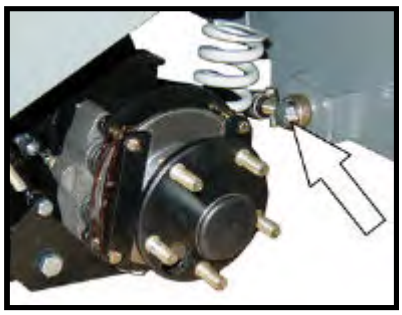

10. Remove the nuts from the bolts holding the suspension links to the frame. Do not remove the bolts at this time.

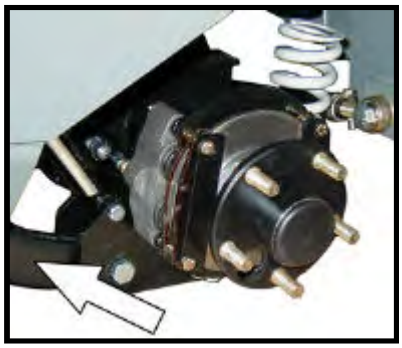

⚠WARNING

Always use a lifting strap, hoist, and jack stands, of adequate capacity to lift and support the vehicle. Failure to use lifting and support devices of rated load capacity may result in severe bodily injury.

11. Raise the rear of the vehicle just high enough to remove the pressure on the rear springs.

    NOTE: Do not raise the vehicle so high to where the rear wheels come off of the ground.

12. Remove the suspension link bolts from the frame.
13. Raise the rear of the vehicle high enough to roll the transmission out from under the frame.

    Note: The transmission will have to be placed on a dolly due to the electric brake locking the rear axles.

14. Lower the frame onto jack stands or the ground.
15. Install the transmission assembly in reverse order of removal.
    a. Bleed the brake system. Refer to section ***Brake Service*** for information regarding bleeding the brakes.
16. Reconnect the main battery connector.
17. Remove the blocks from behind the wheels.
18. Test drive the vehicle.

DISASSEMBLY AND REASSEMBLY OF THE PRIMARY REDUCTION GEAR CASE

⚠WARNING

1. **Make sure the ON-OFF switch is in the "OFF" position, then remove the key.**
2. **Place the forward-reverse switch in the center "OFF" position.**
3. **If equipped with a hand operated park brake, set the brake.**
4. **Place blocks under the front wheels to prevent vehicle movement.**
5. **Unplug the main battery connector.**

⚠WARNING

Always use a lifting strap, hoist, and jack stands, of adequate capacity to lift and support the vehicle. Failure to use lifting and support devices of rated load capacity may result in severe bodily injury.

5. Raise the rear of the vehicle and support with jack stands.
6. Place a drain pan under the gear case that is capable of holding four quarts of oil and drain the oil from the front gear case.
7. If required, remove the drive assembly from the vehicle

   NOTE: Refer to **Removing and Installing the Drive Assembly** *for information on removing the drive from the vehicle.*

8. Remove the motor only if the entire drive is to be disassembled.

   NOTE: Refer to **Motor Removal and Installation** *for information on removing the motor.*

Oil Drain Plug

9. Remove the cover retaining bolts.
10. Remove the cover plate from the differential and let the remaining oil drain from the housing.

⚠CAUTION

Be careful not to damage the sealing surfaces on the housings. Damage to the sealing surface may lead to an oil leak resulting in damage to the internal parts of the drive.

11. Remove the circlip from the idler gear.

12. Remove the input shaft/bearing assembly and idler gear/ bearing assembly from the gear case cover at the same time.

13. Remove the pinion nut from the output gear and remove the output gear from the pinion shaft.

    NOTE: If necessary, remove the seal from the input shaft bore at this time.

14. Mark the gear case position in relation to the 3rd member housing so that it will be reassembled in the same position.
15. Remove the six retaining bolts holding the gear case to the 3rd member housing.

    NOTE: Make note of the angle of the gear case.

16. Remove the gear case housing from the 3rd member housing.
17. Inspect all parts for signs of wear or damage.

⚠CAUTION **Lubricate all parts with gear oil before installation. Failure to pre-lube the parts may result in premature failure.**

18. Assemble the gear case in reverse order.

    NOTE: Torque the drain plug to 21-25 foot-pounds.

    NOTE: Torque the gear case to 3rd member retaining bolts to 18-20 foot-pounds.

    NOTE: Torque the pinion nut to 154-169 foot-pounds.

    NOTE: Apply gasket sealer (#94-430-05) to the front flange on the 3rd member and gear case cover.

    NOTE: Pack the motor seal with non-acetic based grease.

19. Fill the differential with oil.

    NOTE: Refer to **Changing the Differential Oil** *for information on filling the drive with oil.*

20. Lower the vehicle.
21. Reconnect the main battery connector.
22. Remove the blocks from behind the wheels.
23. Test drive the vehicle.

DISASSEMBLING THE 3RD MEMBER

⚠WARNING

1. **Make sure the ON-OFF switch is in the "OFF" position, then remove the key.**
2. **Place the forward-reverse switch in the center "OFF" position.**
3. **If equipped with a hand operated park brake, set the brake.**
4. **Place blocks under the front wheels to prevent vehicle movement.**
5. **Unplug the main battery connector.**

⚠WARNING

Always use a lifting strap, hoist, and jack stands, of adequate capacity to lift and support the vehicle. Failure to use lifting and support devices of rated load capacity may result in severe bodily injury.

5. Raise the rear of the vehicle and support with jack stands.
6. Remove the complete drive from the vehicle.

   NOTE: Refer to **Removing and Installing the Drive Assembly** *for information on removing the drive from the vehicle.*

7. Place a drain pan under the gear case that is capable of holding four quarts of oil and drain the oil from the front gear case and 3rd member.
8. Place the 3rd member on an appropriate stand.
9. Remove the axle shafts and tubes as an assembly from the 3rd member by removing the six axle tube flange bolts on each axle tube.
10. Remove the primary reduction gear case. Refer to ***Disassembly and reassembly of the Primary Reduction Gear Case*** for information on removing the gear case.

11. Remove the 12 side plate bolts, then remove the side plate.

12. Remove the carrier bearing adjusting nut roll pin and adjusting nut from the side plate.

13. Turn the side plate over and remove the carrier bearing race from the side plate.

14. Remove the differential assembly from the 3rd member housing.

15. Remove the carrier bearing adjusting nut roll pin from the 3rd member housing, then remove the carrier adjusting nut.

Roll Pin

16. Remove the carrier bearing race from the 3rd member housing.

17. Remove the front bearing from the input shaft.

    NOTE: The input shaft may have to be driven out to perform this procedure.

18. Remove the input shaft's shims and spacer.

19 Remove the pinion shaft from the 3rd member.
20. Remove the front and rear pinion bearing races.
21. Inspect all parts for signs of wear or damage.
22. Thoroughly clean all parts.

ASSEMBLING THE 3RD MEMBER

1. Temporarily install the pinion gear (hand tighten only).
2. Install the carrier bearing race ring nuts into the housing and cover.

Cover

Housing

3. Install the carrier bearing races into the housing and cover.

Cover

Housing

4. Place the differential assembly into the housing.
5. Tighten the housing carrier bearing race ring nut so that the ring gear is not in binding against the pinion gear.
6. Remove the differential assembly.

   NOTE: Do not allow the ring nut to rotate.

7. Remove the pinion gear and then reinstall the differential assembly.

8. Install the cover onto the housing using 4-bolts in a cross pattern and torque to 45-50 ft-lbs.
9. Pre set the carrier bearing preload by tightening the housing carrier bearing race ring nut until it requires 1.5 to 3.3 ft-lbs to rotate the differential assembly.

   NOTE: Rotate the carrier assembly whenever adjusting the ring nuts.

10. Mark the position of each carrier bearing ring nut in relation to the drive housing and cover and then remove the differential assembly, do not allow the ring nuts to rotate.
11. Install the pinion gear. Re-shim if required.

⚠CAUTION

If the ring and pinion gears or bearings are replaced then the pinion gear must be re-shimmed. Improper pinion gear shims will result in drive noise and premature failure. Refer to Pinion Gear Shimming Instructions.

12. Install the pinion gear holding tool (96-500-42) and tighten the pinion nut enough to keep the pinion gear from rotating.
13. Install the differential assembly.
14. Install the cover and all of the cover bolts. Torque to 45-50 ft-lbs.

15. Check the gear lash between the ring and pinion gears. The gear lash should be .005 to .007 inches.
16. Adjust the gear lash if needed by tightening or loosening the carrier bearing race ring nuts. The two ring nuts must be turned equally in opposite directions.

NOTE: To move the ring gear closer to the pinion: Loosen the housing carrier bearing race ring nuts and tighten the cover carrier bearing race ring nut equally.

NOTE: To move the ring gear away from the pinion: Loosen the cover carrier bearing race ring nut and tighten the housing carrier race ring nut equally.

⚠CAUTION

The two ring nuts must be turned the same amount in opposite directions. This allows the carrier assembly to be positioned with the proper gear lash without upsetting the bearing preload. If the ring nuts are not turned the same amount, then the bearing preload will no longer be correct and will result in drive noise and premature failure.

17. Install the locking roll pins into the housing and cover to lock the ring nuts in place.
18. Remove the pinion gear holding tool.
19. Install the primary reduction gear case, axles and housings, motor, and install the complete drive onto the vehicle.
20. Fill the drive with oil. Refer to the ***Lube Chart*** section for information regarding type of oil. Refer to ***Change Oil*** section for information regarding the proper oil level..
21. Lower the vehicle.
22. Reconnect the main battery connector.
23. Remove the blocks from behind the wheels.
24. Test drive the vehicle.

Pinion Bearing Preload

NOTE: The pinion gear depth must be set before the preload. Refer to **Setting the Pinion Gear Depth**.

1. Install the pinion gear, spacer, and shims into the housing.
2. Install the outer pinion bearing.
3. Install the main gear onto the pinion shaft and torque the pinion nut to 154-169 ft lbs.
4. Measure the torque required to rotate the pinion shaft in the housing.
5. The torque required to rotate the pinion shaft should be between 1.1 and 2.9 ft-lbs. If the torque is not within specifications then add or subtract from the total shim thickness and repeat this procedure until the proper preload is obtained.

   NOTE: Add shims to decrease torque.

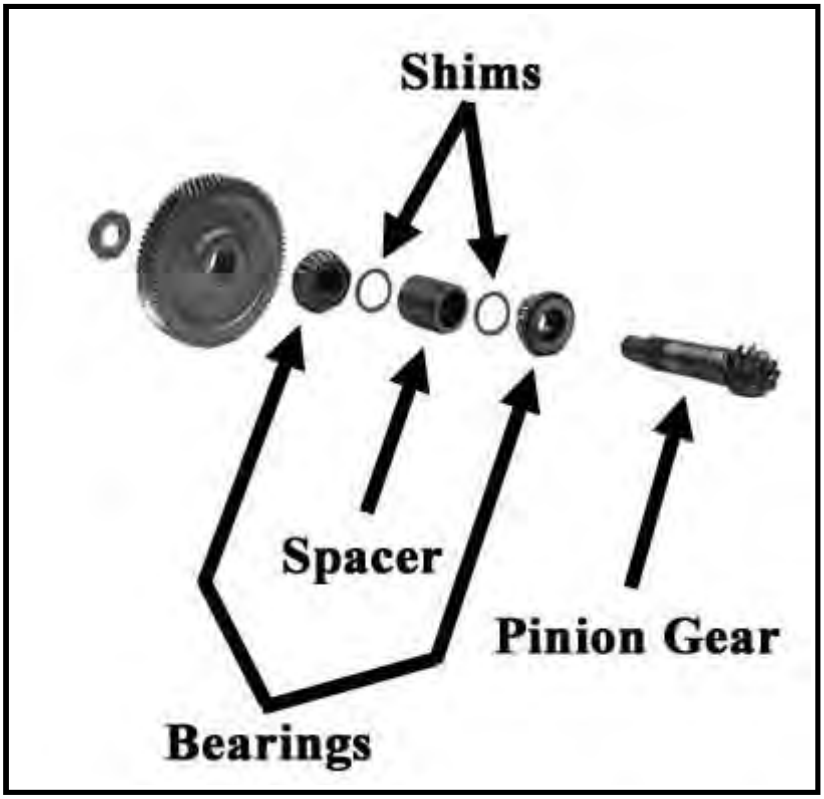

PINION GEAR SHIMMING INSTRUCTIONS

NOTE: This procedure is required only when replacing the front or rear pinion bearings and races or the ring and pinion gears.

NOTE: To perform this procedure, all parts must be clean and the bearings lightly lubricated.

Setting the Pinion Gear Depth

This formula is used to calculate the amount of shims that are required:

C - B - A + (DV) = Pinion Shim (mm) where,

DV = The number on the face of the pinion gear.

A = The distance in millimeters from the face of the pinion gear to the top of the inner pinion bearing race (see below)

B = 54.

C = The number on the edge of the differential side plate closest to the input shaft (see next page).

D = The number on the edge of the differential side plate farthest from the input shaft (see next page).

E = The distance in millimeters from the rear of the drive housing to the face of the pinion gear (see next page).

Once a shim has been selected and the pinion gear is installed, confirm that: **E - D = B + (DV)**

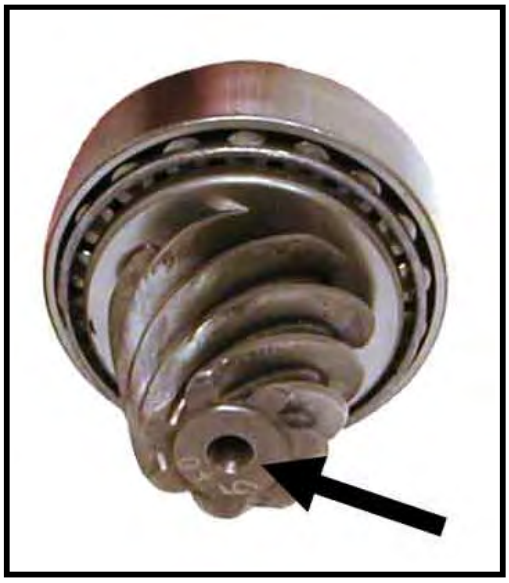

Face of pinion gear

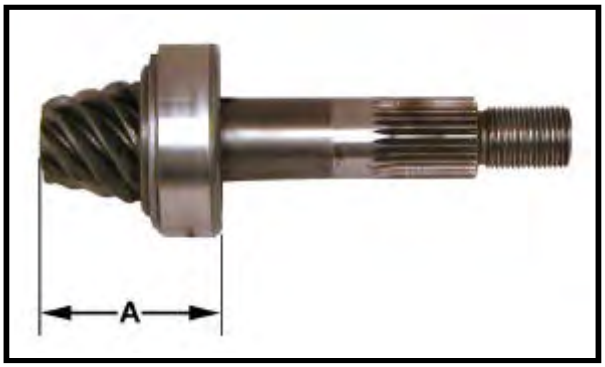

Number on face of pinion gear

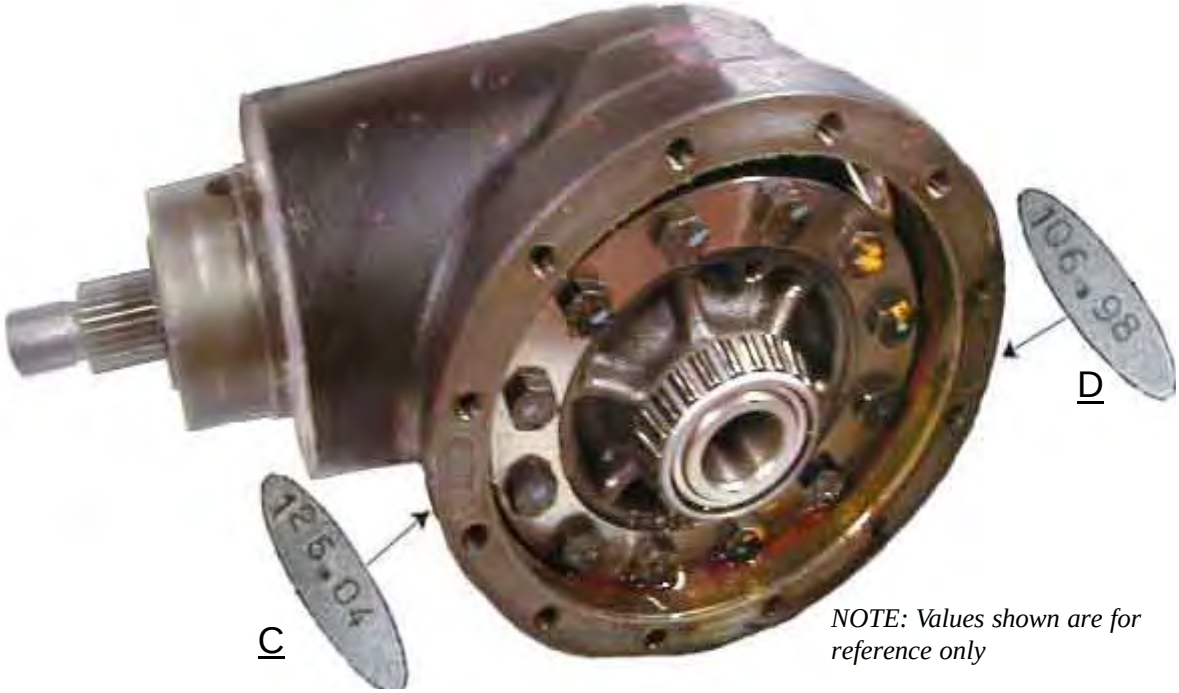

NOTE: Values shown are for reference only

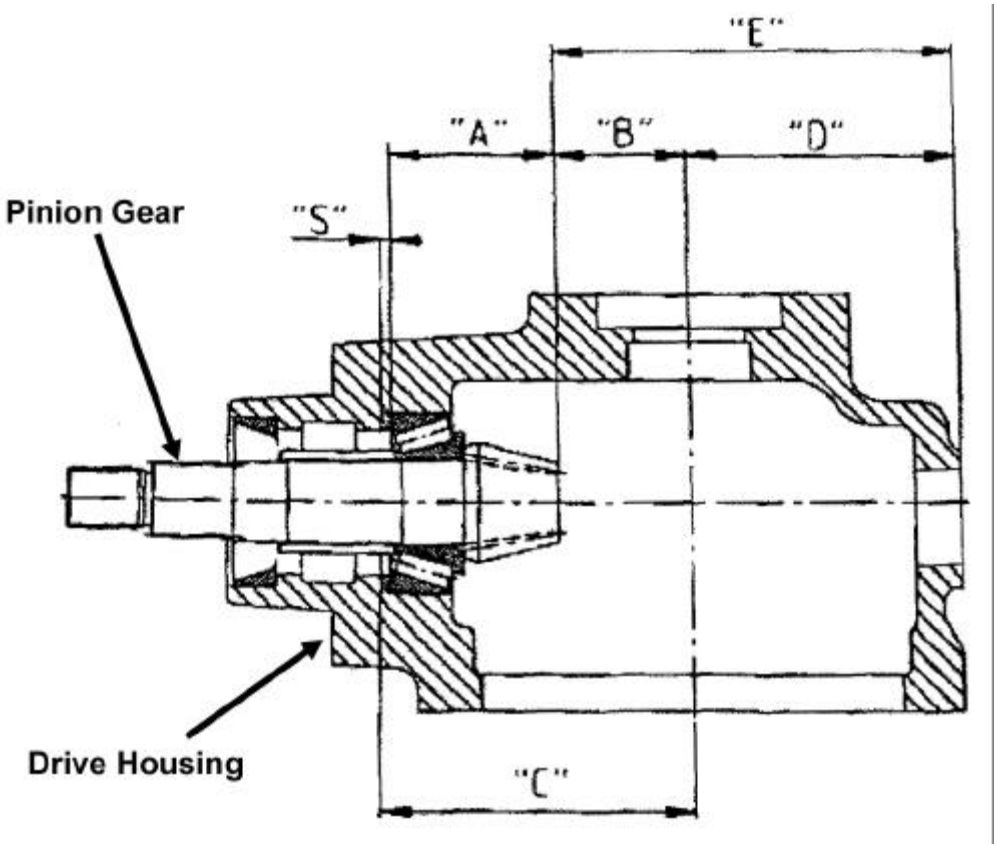

TAYLOR - DUNN

Suspension

TABLE OF CONTENTS

REPLACE THE REAR SPRINGS

If a spring has failed or is fatigued, then it is recommended that both springs are replaced as a set.

⚠WARNING

1. **Make sure the ON-OFF switch is in the "OFF" position, then remove the key.**
2. **Place the forward-reverse switch in the center "OFF" position.**
3. **If equipped with a hand operated park brake, set the brake.**
4. **Place blocks under the front wheels to prevent vehicle movement.**
5. **Unplug the main battery connector.**

6. Remove the upper shock mounting bolt from the rear shocks.

⚠WARNING

Always use a lifting strap, hoist, and jack stands, of adequate capacity to lift and support the vehicle. Failure to use lifting and support devices of rated load capacity may result in severe bodily injury.

7. Raise the rear wheels off of the ground just enough so that the springs can be removed and support with jack stands.
8. Remove the springs.
9. Install new springs in reverse order.
10. Reconnect the main battery connector.
11. Remove the blocks from behind the wheels.
12. Test drive the vehicle.

REPLACE THE FRONT SPRINGS

If a spring has failed or is fatigued, then it is recommended that both springs are replaced as a set.

⚠WARNING

1. **Make sure the ON-OFF switch is in the "OFF" position, then remove the key.**
2. **Place the forward-reverse switch in the center "OFF" position.**
3. **If equipped with a hand operated park brake, set the brake.**
4. **Place blocks under the front wheels to prevent vehicle movement.**
5. **Unplug the main battery connector.**

6. Remove the lower shock mounting bolt from the front shocks.

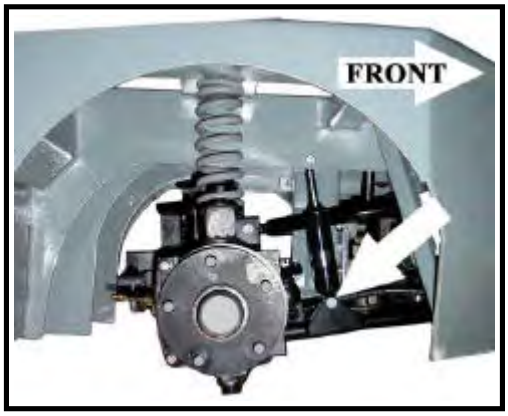

Lower shock bolt. Wheel removed for illustration only.

⚠WARNING

Always use a lifting strap, hoist, and jack stands, of adequate capacity to lift and support the vehicle. Failure to use lifting and support devices of rated load capacity may result in severe bodily injury.

7. Raise the front wheels off of the ground just enough so that the springs can be removed and support with jack stands.

8. Remove the springs.
9. Install new springs in reverse order.
10. Reconnect the main battery connector.
11. Remove the blocks from behind the wheels.
12. Test drive the vehicle

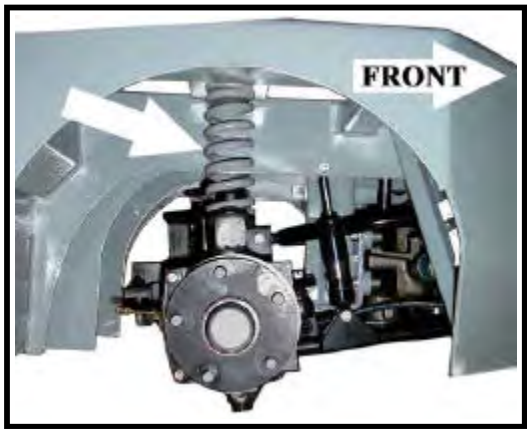

Front spring

REPLACE THE SHOCKS

Front or Rear

It is recommended to replace all four front shock as a set.

NOTE: On some vehicles it may be required to remove the wheel to gain access to the shock mounting bolts. Refer to **Tires and Wheels** *section for information regarding removing the wheels.*

⚠WARNING

1. **Make sure the ON-OFF switch is in the "OFF" position, then remove the key.**
2. **Place the forward-reverse switch in the center "OFF" position.**
3. **If equipped with a hand operated park brake, set the brake.**
4. **Place blocks under the front wheels to prevent vehicle movement.**
5. **Unplug the main battery connector.**

⚠WARNING

Always use a lifting strap, hoist, and jack stands, of adequate capacity to lift and support the vehicle. Failure to use lifting and support devices of rated load capacity may result in severe bodily

6. Some vehicles may require that the wheels be lifted off of the ground and supported with jack stands to replace the shocks.
7. Remove the upper and lower shock bolts.
8. Remove the shock from the vehicle.

NOTE: If the shock that was removed is to be reinstalled:

A. Inspect the shaft where it enters the shock body for any signs of leakage. If any sign of leakage is seen, then the shock must be replaced.

B. Inspect the upper and lower shock bushings. If any signs of damage or wear are seen, then the shock must be replaced.

9. Install the shock in reverse order.
10. Lower the vehicle.
11. Reconnect the main battery connector.
12. Remove the blocks from behind the wheels.
13. Test drive the vehicle.

Tires and Wheels

TABLE OF CONTENTS

TIRE INSPECTION (SOLID EXTRA CUSHION)

⚠WARNING

1. Make sure the ON-OFF-switch is in the "OFF" position, then remove the key.

2. Place the forward-reverse switch in the center "OFF" position.

3. If equipped with a hand operated park brake, set the brake.

4. Place blocks under the front wheels to prevent vehicle movement.

5. Unplug the main battery connector.

6. Inspect the tread depth.
7. Tires are worn and should be replaced when the tread depth is 1/16" (1.5 mm) or less.
8. Reconnect the main battery connector.
9. Remove the blocks from behind the wheels.
10. Test drive the vehicle.

REPLACE THE TIRE

NOTE: To replace the tire, the tire/wheel assembly must be removed from the vehicle. Refer to **Replace the Tire/ Wheel** *section for information on removing the tire/wheel assembly.*

Replacing the Solid Extra Cushion tire will require a press to remove and install the tire.

Only qualified technicians familiar with solid cushion tires and wheels should perform service on these wheels.

REPLACE THE TIRE/WHEEL

⚠WARNING

1. Make sure the ON-OFF-switch is in the "OFF" position, then remove the key.

2. Place the forward-reverse switch in the center "OFF" position.

3. If equipped with a hand operated park brake, set the brake.

4. Place blocks under the front wheels to prevent vehicle movement.

5. Unplug the main battery connector.

⚠WARNING

Always use a lifting strap, hoist, and jack stands, of adequate capacity to lift and support the vehicle. Failure to use lifting and support devices of rated load capacity may result in severe bodily

6. Raise the wheel to be replaced off of the ground and support with jack stands.
7. Remove the 5 wheel nuts and remove the wheel.
8. Install in reverse order.
9. Following the pattern shown below, cross tighten the wheel nuts in two stages as follows:
   1st stage to approximately 20 ft-lbs.
   2nd stage to 80-90 ft-lbs.
10. Reconnect the main battery connector.
11. Lower the wheel to the ground.
12. Remove the blocks from behind the wheels.
13. Test drive the vehicle.

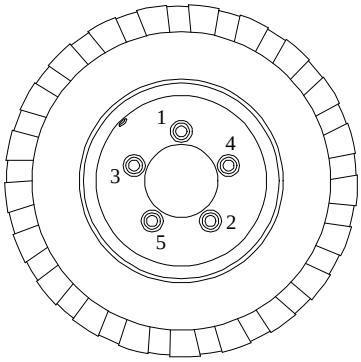

Battery Service

TABLE OF CONTENTS

CLEANING

⚠WARNING

Explosive mixtures of Hydrogen gas are present within battery cells at all times. Do not work with or charge battery in an area where open flames (including gas furnace or water heater pilots), sparks, cigarettes, or any other sources of combustion are present. Always provide ample ventilation in rooms where batteries are being charged. Failure to do so may result in severe bodily injury and/or property damage.

⚠WARNING

Battery electrolyte is poisonous and dangerous. It contains sulfuric acid. Avoid contact with skin eyes or clothing. Wear rubber gloves and safety glasses while servicing batteries. DO NOT INGEST! This may result in severe bodily injury.

⚠WARNING

A battery is a live electrical source. It cannot be disconnected or neutralized. Do not drop any tool or conductive object onto the battery. A conductive object that comes in contact with the battery terminals will initiate a short circuit of the battery. This could cause the battery to explode resulting in severe bodily injury and/or property damage.

⚠CAUTION

Battery electrolyte will stain and corrode most surfaces. Immediately and thoroughly clean any surface outside of the battery that the battery electrolyte comes in contact with. Failure to clean may result in property damage.

⚠WARNING

1. **Make sure the ON-OFF switch is in the "OFF" position, then remove the key.**
2. **Place the forward-reverse switch in the center "OFF" position.**
3. **If equipped with a hand operated park brake, set the brake.**
4. **Place blocks under the front wheels to prevent vehicle movement.**
5. **Unplug the main battery connector.**

6. Dry dirt can be readily blown off with low-pressure air or brushed off.
7. Wetness or wet dirt on the battery indicates battery acid. Using a nonmetallic brush with flexible bristles, wash the battery off with a strong solution of baking soda and hot water (1 lb. of soda to a gallon of water). Continue until all fizzing stops, which indicates that the acid has been neutralized. Then rinse thoroughly with clear water. DO NOT get any of the solution into the battery cells.
8. Reconnect the main battery connector., remove the blocks from the wheels and test drive.

TESTING

Specific Gravity

NOTE: The battery must be fully charged before performing this test.

⚠WARNING

Explosive mixtures of Hydrogen gas are present within battery cells at all times. Do not work with or charge battery in an area where open flames (including gas furnace or water heater pilots), sparks, cigarettes, or any other sources of combustion are present. Always provide ample ventilation in rooms where batteries are being charged. Failure to do so may result in severe bodily injury and/or property damage.

⚠WARNING

Battery electrolyte is poisonous and dangerous. It contains sulfuric acid. Avoid contact with skin eyes or clothing. Wear rubber gloves and safety glasses while servicing batteries. DO NOT INGEST! This may result in severe bodily injury.

⚠WARNING

A battery is a live electrical source. It cannot be disconnected or neutralized. Do not drop any tool or conductive object onto the battery. A conductive object that comes in contact with the battery terminals will initiate a short circuit of the battery. This could cause the battery to explode resulting in severe bodily injury and/or property damage.

⚠WARNING

1. **Make sure the ON-OFF switch is in the "OFF" position, then remove the key.**
2. **Place the forward-reverse switch in the center "OFF" position.**
3. **If equipped with a hand operated park brake, set the brake.**
4. **Place blocks under the front wheels to prevent vehicle movement.**
5. **Unplug the main battery connector.**

The specific gravity of a cell is an indication of the actual state of charge of the cell. A fully charged cell should have a reading of 1275 to 1300 (see the illustration to the right). A discharged cell will read 1100. Ideally, all cells in a battery will have the same reading. Any cells in a battery that vary by more than 30-points may be an indication of a bad cell.

Clean the battery. Refer to ***Cleaning*** section for information on cleaning the battery.

Using part number **77-200-00** hydrometer, check and record the specific gravity of each cell in the battery.

If, after charging, none of the cells exceed a hydrometer reading of 1250 then there may be a fault in the charging system. If the charging system checks OK then the battery is no longer accepting a charge and should be replaced.

NOTE: Refer to **Charger Troubleshooting** *for information on checking the charging system.*

The highest reading will be the cell that is accepting the most charge. This reading will be used to gauge all other cells.

Compare the specific gravity readings to the highest reading, if the difference between any of the cells is more than 30-points, then that battery should be replaced.

Typical Hydrometer Float

WATERING

NOTE: The electrolyte level in a battery rises while charging and will be close to its highest level after the end of a charging cycle. It is recommended to fill the battery at the end of a charging cycle. If the electrolyte is below the top of the battery plates then fill just enough to cover the plates and then top off when the charging cycle is complete.

⚠WARNING

Explosive mixtures of Hydrogen gas are present within battery cells at all times. Do not work with or charge battery in an area where open flames (including gas furnace or water heater pilots), sparks, cigarettes, or any other sources of combustion are present. Always provide ample ventilation in rooms where batteries are being charged. Failure to do so may result in severe bodily injury and/or property damage.

⚠WARNING

Battery electrolyte is poisonous and dangerous. It contains sulfuric acid. Avoid contact with skin eyes or clothing. Wear rubber gloves and safety glasses while servicing batteries. DO NOT INGEST! This may result in severe bodily injury.

⚠WARNING

A battery is a live electrical source. It cannot be disconnected or neutralized. Do not drop any tool or conductive object onto the battery. A conductive object that comes in contact with the battery terminals will initiate a short circuit of the battery. This could cause the battery to explode resulting in severe bodily injury and/or property damage.

⚠WARNING

1. **Make sure the ON-OFF switch is in the "OFF" position, then remove the key.**
2. **Place the forward-reverse switch in the center "OFF" position.**
3. **If equipped with a hand operated park brake, set the brake.**
4. **Place blocks under the front wheels to prevent vehicle movement.**
5. **Unplug the main battery connector.**

6. Clean the battery. Refer to ***Cleaning*** section for information on cleaning the battery.

⚠WARNING

Do not overfill the batteries. Over filling the batteries may cause the batteries to boil over and result in severe bodily injury or property damage.

7. Check the electrolyte level in all battery cells. If low, fill to the correct level with distilled water using part number **77-201-00** battery filler, never add additional battery electrolyte to the batteries.
8. Reconnect the main battery connector.

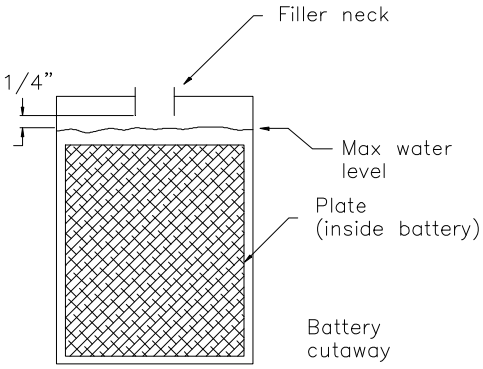

CHARGING

Refer to ***Charging Your Vehicle*** in section ***Safety Rules and Operating Instructions***.

REMOVING

⚠WARNING

Explosive mixtures of Hydrogen gas are present within battery cells at all times. Do not work with or charge battery in an area where open flames (including gas furnace or water heater pilots), sparks, cigarettes, or any other sources of combustion are present. Always provide ample ventilation in rooms where batteries are being charged. Failure to do so may result in severe property damage and or serious

⚠WARNING

Battery electrolyte is poisonous and dangerous. It contains sulfuric acid. Avoid contact with skin eyes or clothing. Wear rubber gloves and safety glasses while servicing batteries. DO NOT INGEST! This may result in serious bodily injury.

⚠WARNING

A battery is a live electrical source. It cannot be disconnected or neutralized. Do not drop any tool or conductive object onto the battery. A conductive object that comes in contact with the battery terminals will initiate a short circuit of the battery. This could cause the battery to explode resulting in severe bodily injury and/or property damage.

⚠WARNING

1. **Make sure the ON-OFF switch is in the "OFF" position, then remove the key.**
2. **Place the forward-reverse switch in the center "OFF" position.**
3. **If equipped with a hand operated park brake, set the brake.**
4. **Place blocks under the front wheels to prevent vehicle movement.**
5. **Unplug the main battery connector.**

⚠CAUTION

Battery electrolyte will stain and corrode most surfaces. Immediately and thoroughly clean any surface outside of the battery that the battery electrolyte comes in contact with. Failure to clean may result in property damage.

6. Thoroughly clean the battery and battery compartment. Refer to ***Cleaning*** in this section for information regarding cleaning the batteries.
7. Using a hoist or forklift equipped with a proper battery lifting device (see next page), slowly raise the battery out of the vehicle.
8. Inspect the battery compartment for signs of corrosion.
9. If minimal signs of corrosion are seen, then the damaged paint should be stripped off and the entire battery compartment cleaned and repainted.

10. If there are excessive signs of corrosion, then it may be necessary to replace some of the frame members or completely rebuild the battery compartment.
11. Inspect the battery cables and terminals. If any of the cables or terminals show signs of corrosion, then they must be repaired or replaced.
12. Install the battery in reverse order.
13. Remove the blocks from the wheels and test drive.

Typical battery lifting beam

Typical forklift attachment to use with the lifting beam

STORAGE AND RETURNING TO SERVICE

⚠CAUTION

If the battery is removed from the vehicle, do not place it directly on the ground, concrete or solid metal surface. It is recommended to store the battery on a wooden pallet or equivalent. Storing on the ground, concrete or solid metal surface will cause the batteryto discharge and may result in premature failure of the battery.

Storage

Thoroughly clean the battery and battery compartment. Refer to ***Cleaning*** in this section for information regarding cleaning the battery.

Check the electrolyte level and charge the battery. Refer to ***Watering*** in this section for information regarding checking the electrolyte level.

Store the vehicle or battery (if removed) in a cool, dry, well ventilated area.

If storing for more than one month, the battery should be charged per the table ar right:

Storage Temperature (ºF)	Charging Interval (months)
Over 60	1
Between 40 and 60	2
Below 40	6

Returning to Service

⚠WARNING

Explosive mixtures of Hydrogen gas are present within battery cells at all times. Do not work with or charge battery in an area where open flames (including gas furnace or water heater pilots), sparks, cigarettes, or any other sources of combustion are present. Always provide ample ventilation in rooms where batteries are being charged. Failure to do so may result in severe property damage and or serious

⚠WARNING

Battery electrolyte is poisonous and dangerous. It contains sulfuric acid. Avoid contact with skin eyes or clothing. Wear rubber gloves and safety glasses while servicing batteries. DO NOT INGEST! This may result in serious bodily injury.

⚠WARNING

A battery is a live electrical source. It cannot be disconnected or neutralized. Do not drop any tool or conductive object onto the battery. A conductive object that comes in contact with the battery terminals will initiate a short circuit of the battery. This could cause the battery to explode resulting in severe bodily injury and/or property damage.

⚠WARNING

1. **Make sure the ON-OFF switch is in the "OFF" position, then remove the key.**
2. **Place the forward-reverse switch in the center "OFF" position.**
3. **If equipped with a hand operated park brake, set the brake.**
4. **Place blocks under the front wheels to prevent vehicle movement.**
5. **Unplug the main battery connector.**

⚠CAUTION

Battery electrolyte will stain and corrode most surfaces. Immediately and thoroughly clean any surface outside of the battery that the battery electrolyte comes in contact with. Failure to clean may result in property damage.

6. Thoroughly clean the battery and battery compartment. Refer to ***Cleaning*** in this section for information regarding cleaning the battery.
7. Check the electrolyte level and charge the battery. Refer to ***Watering*** in this section for information regarding checking the electrolyte level.
8. Test the battery. Refer to ***Testing*** section for information on testing the battery.
9. The battery is now ready to be put back into service.

Control System Diagnostics

TABLE OF CONTENTS

Rev B

Test Equipment Required:

- User Level Maintenance Handset # 62-027-64
  The Maintenance Handset can view current faults, fault history, monitor all controller inputs and outputs and monitor the current status of the controller, motor, battery and vehicle operation.
  Instruction for using the handset are included with the handset.
- Throttle module test harness #75-089-00.

Important Notes and Instructions

- Troubleshooting this vehicle requires proficiency in the use of standard test equipment such as Volt meters, Ammeters, Ohm meters, etc.
  Troubleshooting this vehicle requires proficiency in testing relating to the continuity of switches, connectors, wiring, etc.
  If the technician working on this vehicle is not proficient in any of the above, diagnostics should be referred to a qualified technician..
- Make sure the batteries are in good condition and fully charged before performing any tests.
- If the vehicle exhibits intermittent problems, it must be in the failed mode for troubleshooting. If it is running normally when the testing is done then the problem will not be identified.

DURING ALL TESTS or REPAIRS.

⚠WARNING

Turn the ON-OFF switch OFF then disconnect both of the battery leads during any maintenance or before disconnecting any electrical component or wire. Failure to do so may cause severe bodily injury and/or property damage.

⚠WARNING

The rear drive wheels may rotate during some of the following tests. Block the front wheels, raise the rear drive wheels off the ground, and support the vehicle with jack stands. Failure to do so may cause the vehicle to move and cause severe bodily injury and/or property damage.

Use lifting and support devices with a minimum capacity of twice the gross weight of your vehicle. Failure to use lifting and support devices of recommended load capacity may result in severe bodily injury.

⚠WARNING

After any repairs are made, completely retest the vehicle before lowering the drive wheels to the ground. Failure to retest the vehicle could result in unexpected movement of the vehicle resulting in severe bodily injury and/or property damage.

Status LED Code Table

The status LED's on the speed controller can be used to give you an idea of where the problem may be. During normal operation (no faults) the yellow LED will be flashing steady.

When the controller senses a fault the two LED's can be used to determine the fault code. The fault code will be a two digit code. The red LED signifies which digit and the yellow LED signifies the fault code. For example: When the red LED flashes once, the yellow LED will be flashing the first digit. When the red LED flashes twice, the yellow LED will be flashing the second digit. The fault code will repeat until the fault is corrected.

Typical location of Status LED's

Code	Handset Display *Effect of Fault*	Possible Cause	Note
12	`Controller Overcurent` *Shutdown of main contactor;* *Shutdown of motor;* *Shutdown of EM brake.*	1. External short in motor wiring. 2. Defective controller. 3. Faulty wiring.	
13	`Current Sensor Fault` *Shutdown of main contactor;* *Shutdown of motor;* *Shutdown of EM brake.*	1. Short or leakage to frame from motor windings or wiring. 2. Controller defective	
14	`Precharge Failed` *Shutdown of main contactor;* *Shutdown of motor;* *Shutdown of EM brake.*	1. External load attached to controller B+ terminal.	*Possible non-factory installed device*
15	`Controller Severe Undertemp` *Shutdown of main contactor;* *Shutdown of motor;* *Shutdown of EM brake;* *Shutdown throttle;* *Full Brake.*	1. Vehicle operated in temperatures below -40ºC.	
16	`Controller Severe Overtemp` *Shutdown of main contactor;* *Shutdown of motor;* *Shutdown of EM brake;* *Shutdown throttle;* *Full Brake.*	1. Vehicle operated in extreme high ambient temperatures. 2. Vehicle overloaded. 3. Controller not properly mounted.	*Controller overheated (+95ºC)*
17	`Severe Undervoltage` *Reduced drive torque.*	1. Blown circuit breaker. 2. Battery failure while in operation.	
18	`Severe Overvoltage` *Shutdown of main contactor;* *Shutdown of motor;* *Shutdown of EM brake;* *Shutdown throttle;* *Full Brake.*	1. Blown circuit breaker during regen. 2. Battery failure during regen.	
21	`Controller Undertemp Cutback` *Reduced motor torque.*	1. Controller operated in temperatures below -25ºC	*Controller output is reduced below -25ºC*
22	`Controller Overtemp Cutback` *Reduced drive and brake torque.*	1. Vehicle operated in extreme high ambient temperatures. 2. Vehicle overloaded. 3. Controller not properly mounted.	*Controller overheated (+85ºC)*
23	`Undervoltage Cutback` *Reduced drive torque.*	1. Batteries discharged. 2. Battery failure.	

Code	Handset Display *Effect of Fault*	Possible Cause	Note
24	Overvoltage Cutback *Reduced brake torque.*	1. Battery failure. 2. High voltage generated during normal regen.	
25	+5-volt Supply Failure *None.*	1. Faulty motor encoder. 2. Faulty wiring	*+5-volt supply at Pin - 26 is too low*
26	Digital Out 6 Overcurrent *Digital output 6 will not turn on*	1. Load on output #6 exceeded 0.015 Amps.	*Not used – If fault occurs then check controller connector for contamination*
27	Digital Out 7 Overcurrent *Digital output 7 will not turn on*	1. Load on output #7 exceeded 0.015 Amps.	*Not used – If fault occurs then check controller connector for contamination*
28	Motor Temp Hot Cutback *Reduced drive torque.*	1. Vehicle operated in extreme high ambient temperatures. 2. Vehicle overloaded.	*Motor overheated*
29	Motor Temp Sensor Fault *MaxSpeed reduced, Limited Operating Strategy (LOS) and motor temperature cutback disabled.*	1. Motor temperature sensor fault. 2. Wiring Fault.	
31	Main Open/Short *Shutdown Driver 1;* *Shutdown of motor;* *Shutdown of EM brake.*	1. Faulty main contactor coil. 2. Faulty wiring.	
32	EM Brake Open/Short *Shutdown Driver 2;* *Shutdown Throttle;* *Full brake.*	3. Faulty motor brake. 4. Faulty wiring.	
33	Coil3 Driver Open/Short *Shutdown driver 3.*	1. See note.	*Not used – If fault occurs then check controller connector for contamination*
35	PD Open/Short *Shutdown PD*	1. See note.	*Not used – If fault occurs then check controller connector for contamination*
36	Encoder Fault *Control mode changed to , Limited Operating Strategy (LOS)*	1. Faulty motor encoder. 2. Faulty wiring.	
37	Motor Open *Shutdown main contactor;* *Shutdown motor;* *Shutdown EM bake.*	1. Open motor windings. 2. Faulty wiring.	
38	Main Contactor Welded *Shutdown main contactor;* *Shutdown motor;* *Shutdown EM bake*	1. Main contactor welded. 2. Motor phase 'U' open circuit. 3. Short to B+ controller terminal. 4. Faulty wiring.	
39	Main Contactor Did Not Close *Shutdown main contactor;* *Shutdown motor;* *Shutdown EM bake*	1. Faulty main contactor. 2. Faulty wiring. 3. B+ Circuit breaker blown.	
41	Throttle Wiper High *Shutdown throttle.*	1. Faulty throttle module. 2. Faulty wiring.	*Voltage from throttle module too high*
42	Throttle Wiper Low *Shutdown throttle.*	1. Faulty throttle module. 2. Faulty wiring.	*Voltage from throttle module too low*
43	Brake Wiper high *Full brake.*	1. See note, voltage too high on pin-17.	*Not used – If fault occurs then check controller connector for contamination*

Code	Handset Display *Effect of fault*	Possible Cause	Note
44	Brake Wiper Low *Full brake.*	1. See note, voltage too low on pin-17	*Not used – If fault occurs then check controller connector for contamination*
45	Pot Low Overcurrent *Shutdown throttle;* *Full brake.*	1. Current into pin-18 exceeded 0.010A	*Not used – If fault occurs then check controller connector for contamination.*
46	EEPROM Failure *Shutdown main contactor;* *Shutdown motor;* *Shutdown EM bake;* *Shutdown Throttle;* *Shutdown interlock* *Shutdown Driver 1;* *Shutdown Driver 2;* *Shutdown Driver 3* *Shutdown Driver 4;* *Shutdown PD;* *Full brake.*	1. Controller parameters corrupted.	*Controller must be returned to factory for reprogramming.*
47	HPD/Sequencing Fault *Shutdown throttle.*	1. Startup switches not operated in the correct order. 2. Faulty wiring or switches.	*Refer to operator section for correct startup sequence.*
49	Parameter Change Fault *Shutdown main contactor;* *Shutdown motor;* *Shutdown EM bake.*	1. May occur when adjusting parameters.	*Cycle key switch to clear fault.*
68	VCL Runtime Error *Shutdown main contactor;* *Shutdown motor;* *Shutdown EM bake;* *Shutdown Throttle;* *Shutdown interlock* *Shutdown Driver 1;* *Shutdown Driver 2;* *Shutdown Driver 3* *Shutdown Driver 4;* *Shutdown PD;* *Full brake.*	1. Controller parameters corrupted.	*Controller must be returned to factory for reprogramming.*
69	External Supply Out of Range *None.*	1. Faulty wiring. 2. Faulty motor encoder. 3. Faulty dash display.	*Excessive combined current into pin-26 and pin-25.*
71	OS General *Shutdown main contactor;* *Shutdown motor;* *Shutdown EM bake;* *Shutdown Throttle;* *Shutdown interlock* *Shutdown Driver 1;* *Shutdown Driver 2;* *Shutdown Driver 3* *Shutdown Driver 4;* *Shutdown PD;* *Full brake.*	1. Internal controller fault.	*If cycle key switch does not clear fault, controller may have failed.*
72	PDO Timeout *Shutdown interlock;* *CAN NMT State set to Pre-operational*	1. Internal controller fault.	*Cycle key switch to clear fault.*
73	Stall Detect *Control mode changed to LOS.*	1. Stalled motor. 2. Faulty motor encoder. 3. Faulty wiring to encoder. 4. Encoder power supply fault.	*Encoder power supply is provided by pin-26 from controller.*

THROTTLE MODULE TEST

Disconnect the truck harness from the throttle module. Connect the plug on the short end of the 75-089-00 test harness to the throttle module. Connect the receptacle on the short end of the test harness to the vehicles control harness. The long end of the harness will be used for testing. Refer to the illustration below.

Testing must be performed in the order shown.

➡ ***This testing cannot be completed without the 75-089-00 test harness.***

Unless specified otherwise, all references to a pin # is referring the connector on the long end of the test harness. Refer to the illustration for the pin locations in the connector. The pin numbers are cast into the connector as shown in the illustration.

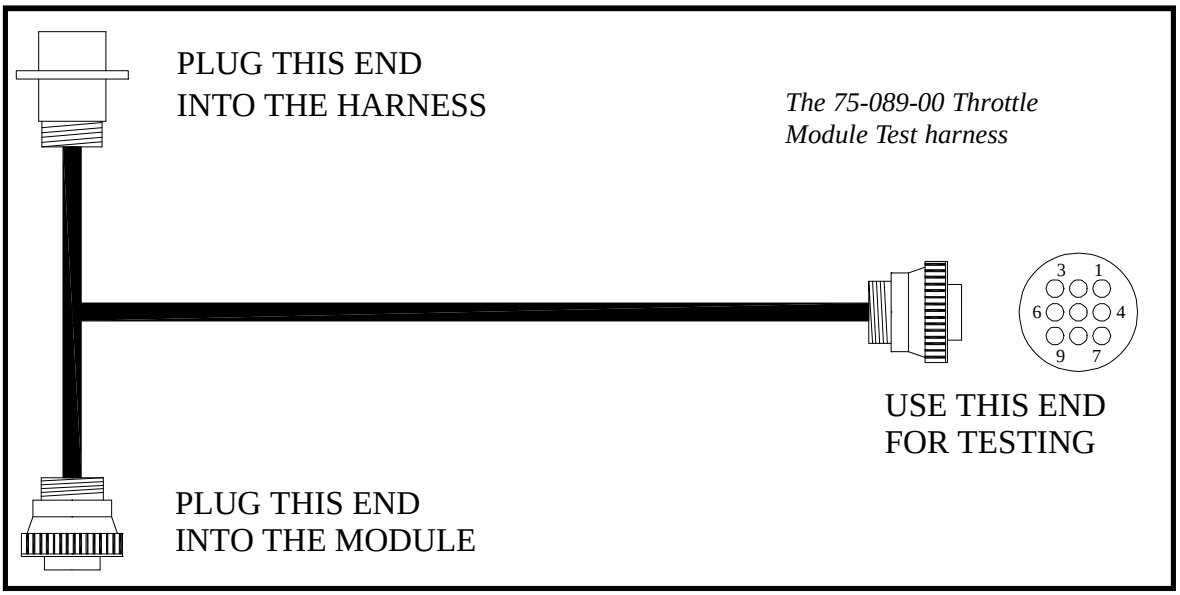

⚠WARNING

The rear drive wheels may rotate during some of the following tests. Block the front wheels, raise the rear drive wheels off the ground, and support the vehicle with jack stands. Failure to do so may cause the vehicle to move and cause severe bodily injury and/or property damage.

Use lifting and support devices with a minimum capacity of twice the gross weight of your vehicle. Failure to use lifting and support devices of recommended load capacity may result in severe bodily injury.

⚠WARNING

After any repairs are made, completely retest the vehicle before lowering the drive wheels to the ground. Failure to retest the vehicle could result in unexpected movement of the vehicle resulting in severe bodily injury and/or property damage.

All tests performed with the ON-OFF Switch switch in the ON position.

Accelerator pedal depressed meas to depress the accelerator pedal fully (full speed).

Accelerator pedal released means to completely release the accelerator pedal (off).

TEST 1:

Accelerator pedal released.

Test the voltage from pin #9 to battery positive.

If the voltage equals battery volts ,then skip ahead to test #2.
If the voltage does not equal battery volts, then check the wire from pin #9 to the battery voltage negative circuit breaker.

Stop trouble shooting here and repair the problem. When the repair is completed, completely retest the vehicle before lowering the drive wheels to the ground.

TEST 2:

Accelerator pedal released.

Test the voltage from pin #9 to pin #8.

If the voltage equals battery volts, then skip ahead to test #3.
If the voltage does not equal battery volts, then check the wire from pin #8 to the ON-OFF switch.

Stop trouble shooting here and repair the problem. When the repair is completed, completely retest the vehicle before lowering the drive wheels to the ground.

TEST 3:

Accelerator pedal released.

Test the voltage from pin #9 to pin #4.

If the voltage equals battery volts, then skip ahead to test #4.
If the voltage does not equal battery volts, then check the wire from pin #4 to the start switch.

Stop trouble shooting here and repair the problem. When the repair is completed, completely retest the vehicle before lowering the drive wheels to the ground.

TEST 4:

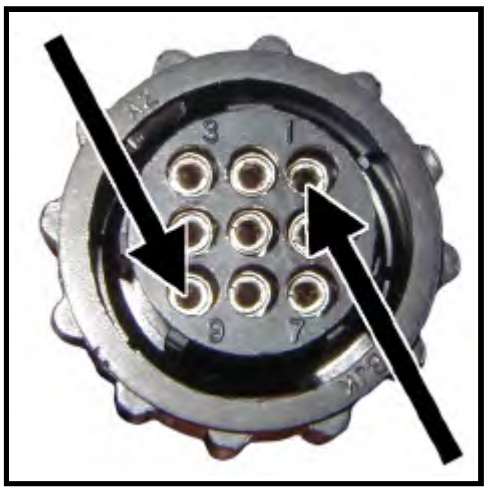

Accelerator pedal released.

Test the voltage from pin #9 to pin #1.

If the voltage is below 0.3 volts, then skip ahead to test #5.
If the voltage is above 0.3 volts, then the module has failed and must be replaced.

Stop trouble shooting here and repair the problem. When the repair is completed, completely retest the vehicle before lowering the drive wheels to the ground.

TEST 5a:

Test the voltage from pin #5 to pin #9.

Accelerator pedal released.

If the voltage is low then skip ahead to test 5b.
If the voltage is high then then the module has failed.

Stop trouble shooting here and repair the problem. When the repair is completed, completely retest the vehicle before lowering the drive wheels to the ground.

TEST 5b:

Accelerator pedal depressed.

If the voltage equals battery volts, then skip ahead to test #6.
If the voltage does not equal battery volts, then the module has failed or the accelerator pedal return spring on the module is broken.

Stop trouble shooting here and repair the problem. When the repair is completed, completely retest the vehicle before lowering the drive wheels to the ground.

TEST 6:

Accelerator pedal depressed.

Test the voltage from pin #9 to pin #1.

If the voltage is between 4.8 and 5.1 volts, then skip ahead to test #7.
If the voltage is not between 4.8 and 5.1 volts, then the module has failed and must be replaced.

Stop trouble shooting here and repair the problem. When the repair is completed, completely retest the vehicle before lowering the drive wheels to the ground.

TAYLOR - DUNN

Wire Diagrams

The vehicle wiring diaram is too large to be legible when printed at this size.

A full size diagram (22 x 16) is inculded on the CD in PDF format. You can access the diagram from a button on the CD menu.

The diagram # is SCH-0006.

TAYLOR - DUNN

Charger Troubleshooting

The charger supplied with this vehicle is From EnerSys. The model number of the charger can be found in the ***Specifications*** page in the ***Safety Rules and Operating Instructions*** section.

Refer to the documentation supplied with the charger or contact the charger manufacturer for more information.

Refer to manufacturers web site for contact information:
http://www.enersysmp.com/

TAYLOR - DUNN

Illustrated Parts

TABLE OF CONTENTS

Front Axle, Steering

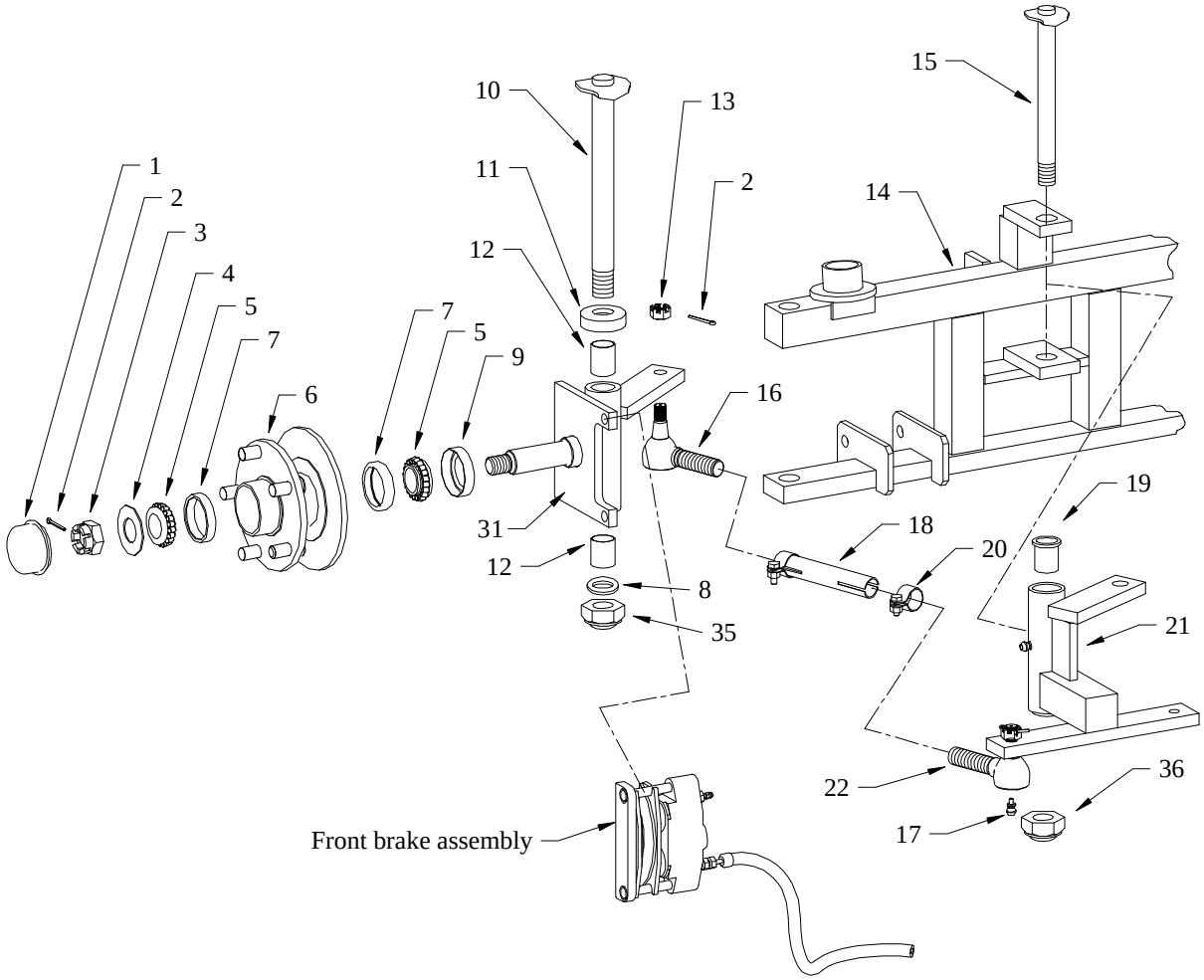

Front Axle, Steering

Item No.	Part No.	Description	Qty
1	92-105-00	Bearing cap	2
2	88-527-14	Cotter pin	8
3	88-239-85	3/4 NF Hex slotted nut	2
4	88-228-60	3/4 Cut Flat washer	2
5	80-011-00	Bearing	4
6	12-115-10	Wheel hub (includes bearing races, inner bearing and seal)	2
7	80-102-00	Race	4
8	88-268-61	7/8 Flat washer	2
9	45-304-00	Grease seal	2
10	21-015-15	King pin	2
11	80-309-00	Thrust bearing	2
12	32-204-10	Bushing	4
13	88-159-85	1/2 NF Hex slotted nut	4
14	15-425-10	Axle beam	1
15	21-015-20	Pivot pin	1
16	86-501-98	Ball joint, left hand thread	3
17	87-074-00	Grease fiting	6
18	18-020-30	Steeing link	2
19	32-200-00	Bushing	2
20	86-510-00	Ball joint clamp	6
21	14-425-27	Steering pivot	1
22	86-501-99	Ball joint, right hand thread	3
31	14-425-31	Steering knuckle, left	1
	14-425-32	Steering knuckle, right	1
35, 36	88-289-81	7/8 NF Thin pattern lock nut	3
Not Shown	18-035-00	Drag link	1

* - Not Available at Time of Printing

Steering Column and Linkage

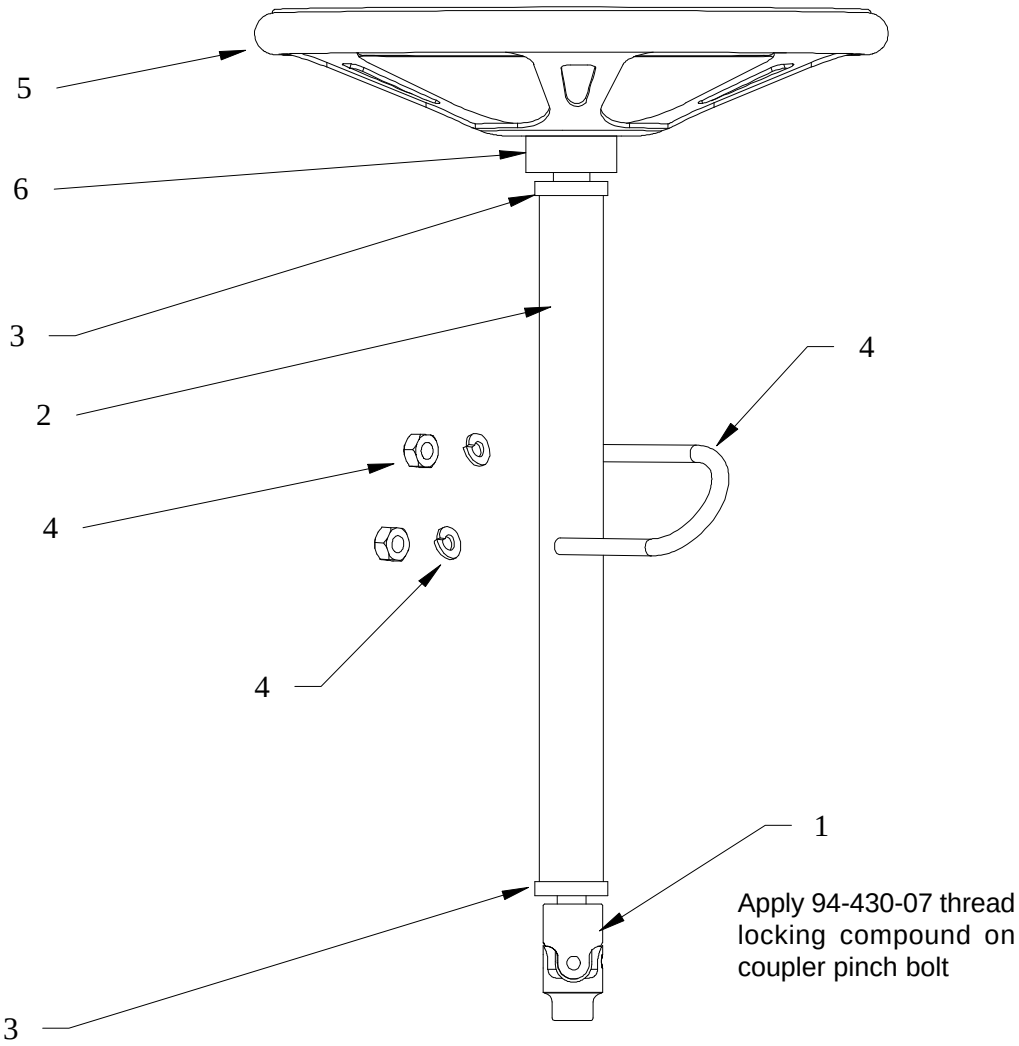

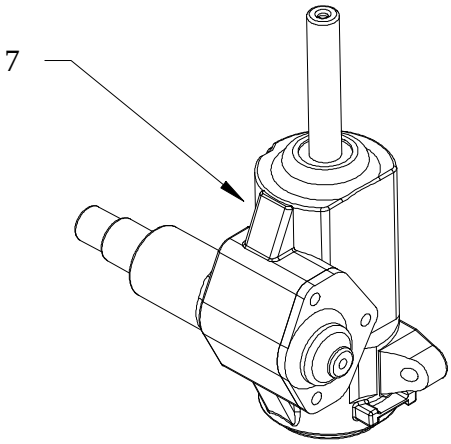

Steering Column

Item No.	Part No.	Description	Qty
1	18-426-00 (obsolete)	Steering shaft, up to serial number 180285	1
	18-426-01*	Steering shaft, starting number 180286	1
2	18-426-05	Steering column tube	1
3	80-400-10	Bearing	2
4	96-123-45	U-bolt (includes nuts)	1
5	19-005-17	Steering wheel	1
6	19-005-02	Adaptor, Steering wheel (includes shaft nut, steering wheel bolts and cap)	1
7	18-308-21	Steering gear	1
Not Shown	18-108-00	Pitman arm	1
	88-120-15	7/16NC x 1-1/2 Hax bolt, grade 5 (steering gear mounting)	3
	88-279-82	7/8NF Thin pattern nut (pitman arm)	1
	88-262-62	7/8 Split lock nut (pitman arm nut)	1

*Starting serial number 180286, the steering shaft was revised to use a pinch bolt (was a set screw). The original steering shaft is no longer available.

* - Not Available at Time of Printing

Steering Gear

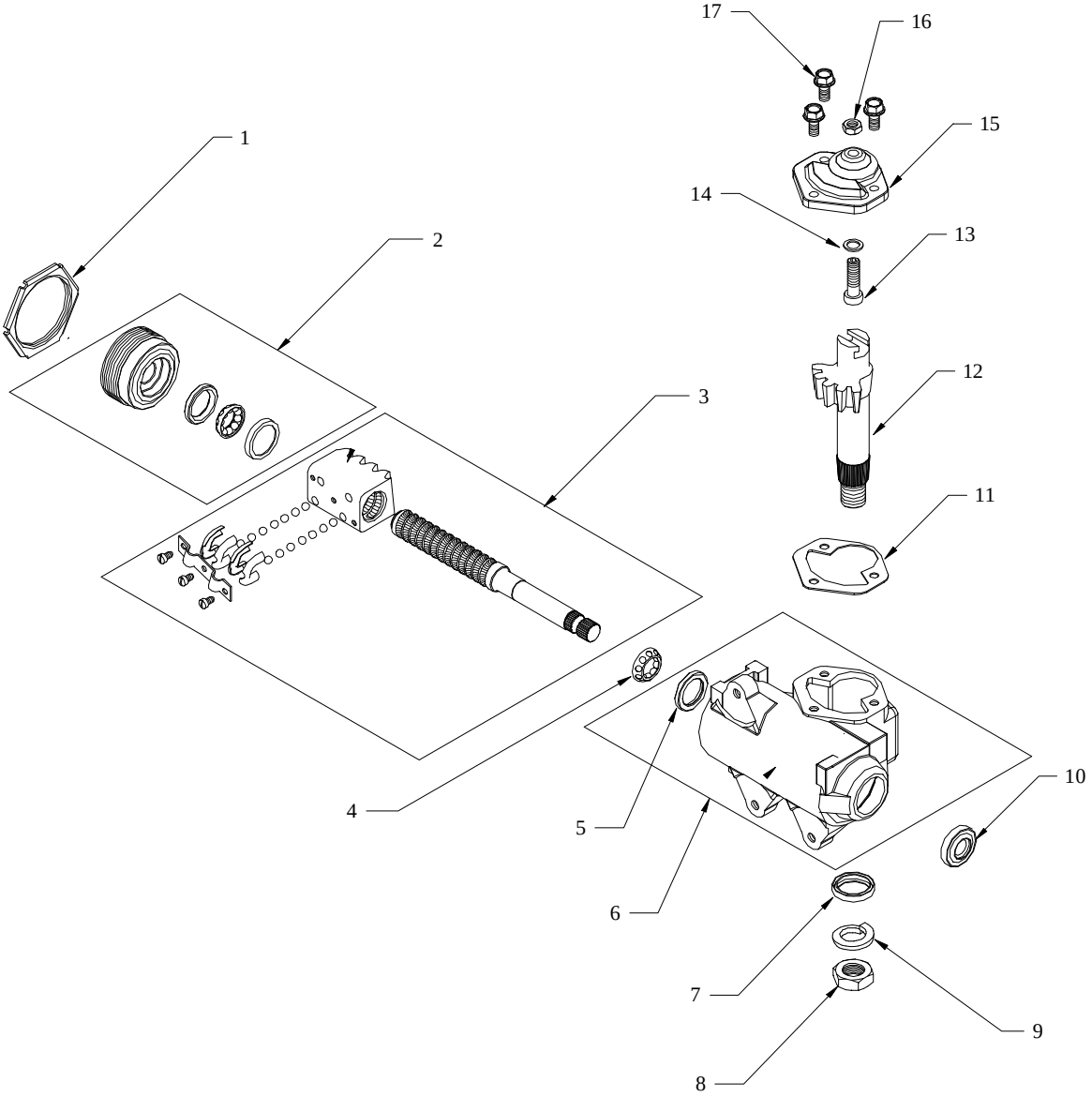

Steering Gear (18-308-21)			
ITEM #	PART #	DESCRIPTION	QTY
1	18-308-70	Locknut	1
2	18-308-71	Adjuster assembly	1
3	18-308-72	Worm assenbly	1
4	18-308-23	Upper worm bearing	1
5	18-308-22	Upper worm bearing race	1
6	18-308-77	Housing	1
7	18-308-78	Seal, pitman shaft	1
8	18-308-80	Nut, pitman shaft	1
9	18-308-81	Lock washer	1
10	18-308-79	Seal, input shaft	1
11	18-308-82	Gasket	1
12	18-308-76	Pitman shaft	1
13	18-308-75	Gear lash adjuster	1
14	18-308-85	Shim kit	1
15	18-308-84	Side cover	1
16	18-308-86	Jam nut	1
17	18-308-83	Bolt, side cover	3

* - Not Available at Time of Printing

Front Suspension

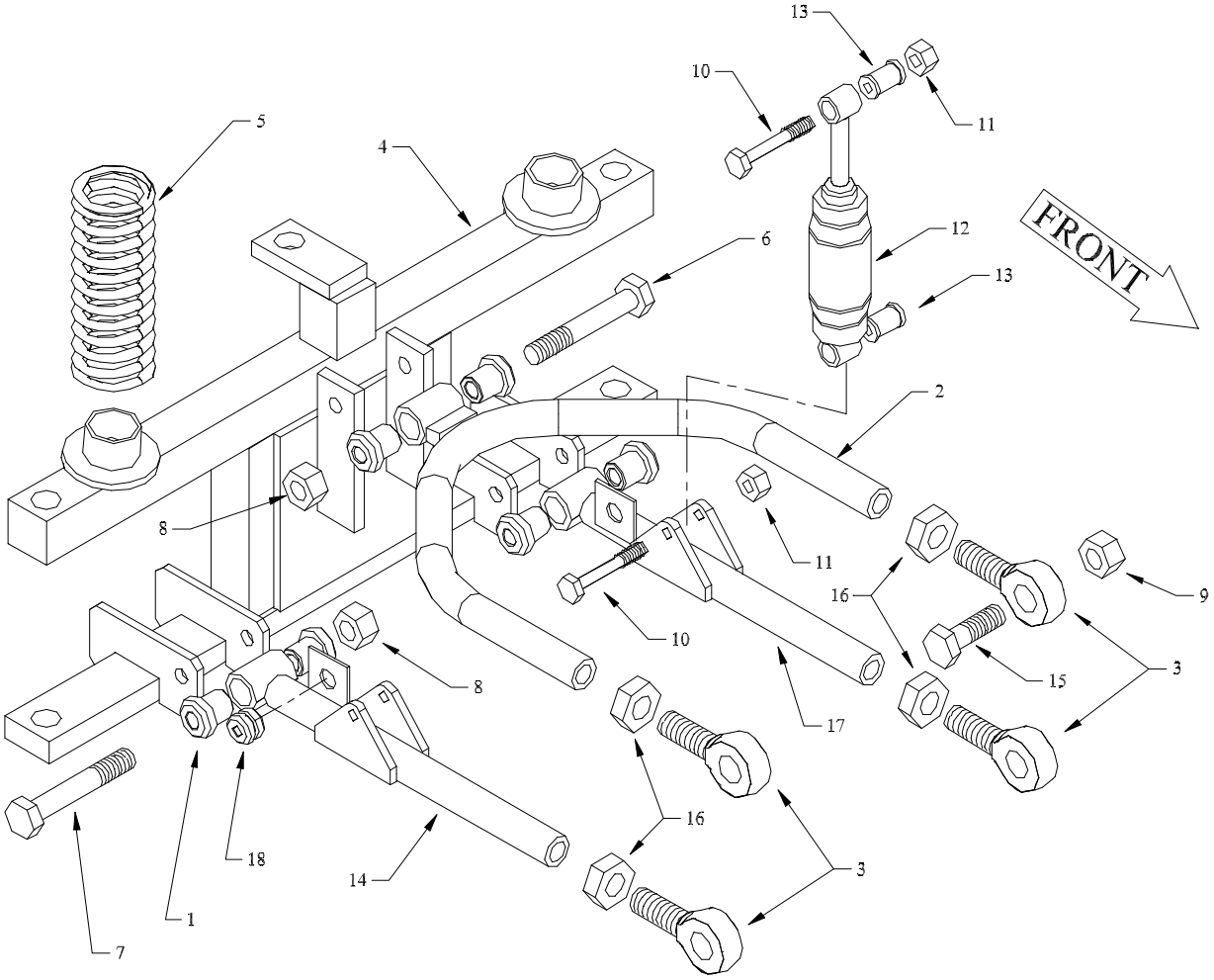

Front Suspension			
ITEM #	PART #	DESCRIPTION	QTY
1	32-214-50	Bushing	6
2	00-425-00	Wishbone link	1
3	86-522-00	Rod end	4
4	See Front Axle	Axle beam	1
5	85-142-00	Spring	2
6	96-240-00	1/2 NC x 4 Hex bolt	1
7	88-140-22	1/2 NC x 3-1/2 Hex bolt	2
8	88-149-81	1/2 NC Lock nut	3
9	88-189-82	5/8 NC Then pattern lock nut	4
10	88-101-16	3/8 NC x 2 Hex bolt, grade 5	4
11	88-109-81	3/8 NC Hex lock nut	4
12	86-007-00	Shock	2
13	32-207-10	Bushing	4
14	00-425-15	Right side lower link	1
15	88-180-18	5/8 x 2-1/2 NC Hex bolt	4
16	88-199-82	5/8 NF Thin pattern hex nut	4
17	00-425-01	Left side lower link	1
18	98-607-10	Grommet	2
Not Shown	98-753-15	Rubber bump stop	2

* - Not Available at Time of Printing

Transmission Assembly

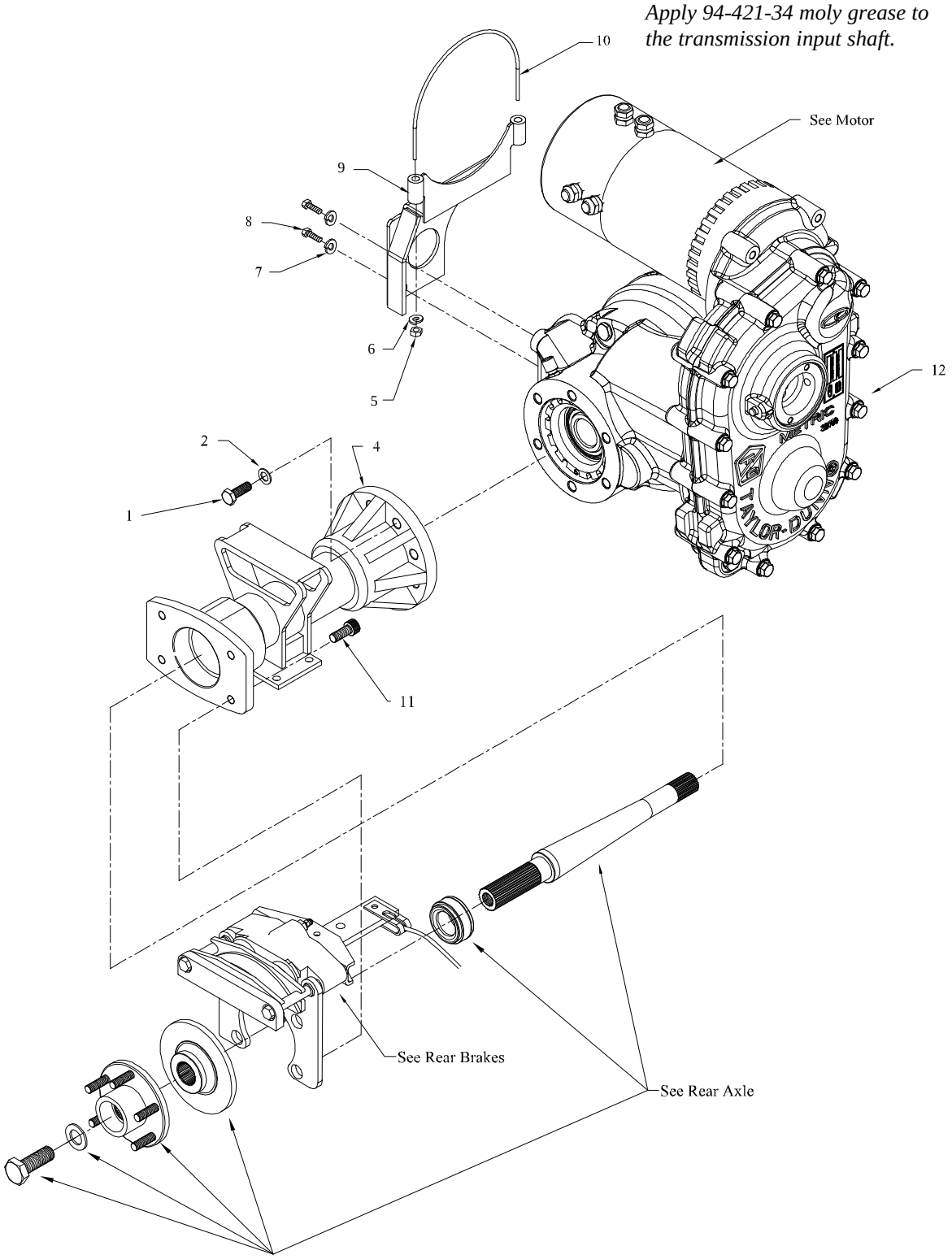

Transmission Assembly			
ITEM #	PART #	DESCRIPTION	QTY
1	89-113-30	12 x 1.75 x 30mm Hex bolt, class 8.8	12
2	89-113-60	12mm Split lock washer	12
3	-	-	-
4	41-290-81	Axle tube, left	1
	41-290-82	Axle tube, right	1
5	88-099-80	5/16 NF Hex nut	2
6	88-088-62	5/16 Split lock washer	2
7	88-128-62	7/16 Split lock washer	2
8	89-111-27	10 x 1.5 x 30mm Hex bolt	2
9	70-456-03	Rear motor support bracket	1
10	96-114-12	U-bolt	1
11	96-327-10	Hex socket bolt	8
12	44-440-84	Transmission center section assembly with 30:1 gears (no motor)	1
Not Shown	80-714-05	O-ring, motor coupler	1
	89-060-11	Motor mounting bolt, M6 X 1.0 X 50 HEX HEAD BOLT	3
	88-067-17	Motor mounting bolt, 1/4NC X 1.125 LG,HEX HEAD,GR.8	1
	88-068-62	1/4 LOCK WASHER (motor mounting bolts)	4

* - Not Available at Time of Printing

Transmission Gear Case

Note 1: Spacer 23 is available in increments of .05mm starting at 3.9mm. 3.9mm spacer is part number GT-3287213. Add 10 to the part number for every 0.05mm over 3.9. For example, if 4.55mm is needed: 4.55-3.9 = .65mm over, 0.65/.05 = 13, 13*10 = 130. Part number for 4.5mm spacer is 3287213+130 = 3287343.

Transmission Gear Case			
ITEM #	PART #	DESCRIPTION	QTY
1	GT-71682	M8 x 60 bolt	12
2	GT-3287563	Gear case cover	1
3	GT-71259	Bearing	1
4	GT-3287513	Input shaft, 30:1	1
5	GT-71982	O-ring	1
6	GT-3287503	Eccentric shaft	1
7	GT-72005	Bearing	2
8	GT-3287493	Idler gear	1
9	GT-70302	M10 x 30 Bolt	6
10	GT-71715	Snap ring	1
11	GT-3287553	Gear case housing	1
12	GT-72019	Seal	1
18	GT-71979	Bearing	1
21	GT-3273633	Pinion nut	1
23	See Note 1, previous page	Spacer	1
24	GT-3287453	Output gear, 30:1	1
25	GT-328	Spacer, 46.100mm	1
	GT-328	Spacer, 46.100mm	0 or 1
	GT-328	Spacer, 46.125mm	0 or 1
	GT-328	Spacer, 46.150mm	0 or 1
	GT-328	Spacer, 46.175mm	0 or 1
26	GT-3287903	Shim, 0.100mm	0 or 1
	GT-3287883	Shim, 0.400mm	0 or 1
	GT-3287893	Shim, 0.500mm	0 or 1
	GT-3287853	Shim, 0.600mm	0 or 1
	GT-3287863	Shim, 0.700mm	0 or 1
	GT-3287873	Shim, 0.800mm	0 or 1
27	GT-71068	Bearing	1
28	GT-72022	Bearing	1
30	GT-70299	10mm Washer	6
37	GT-3252633	Dowel pin	2

* - Not Available at Time of Printing

Transmission Differential Case

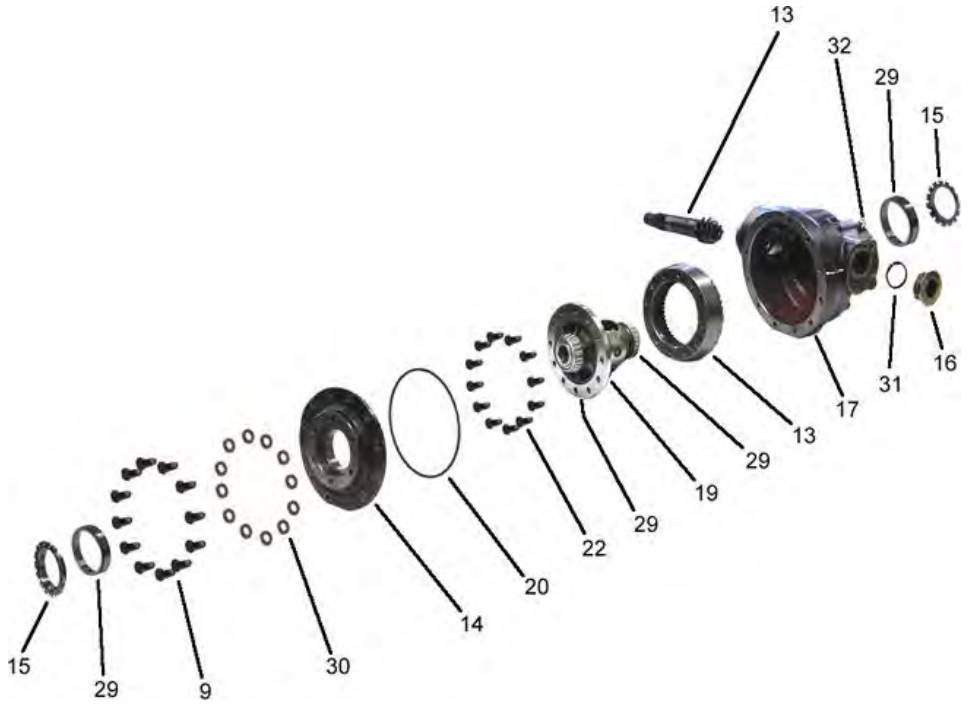

Rear Axle

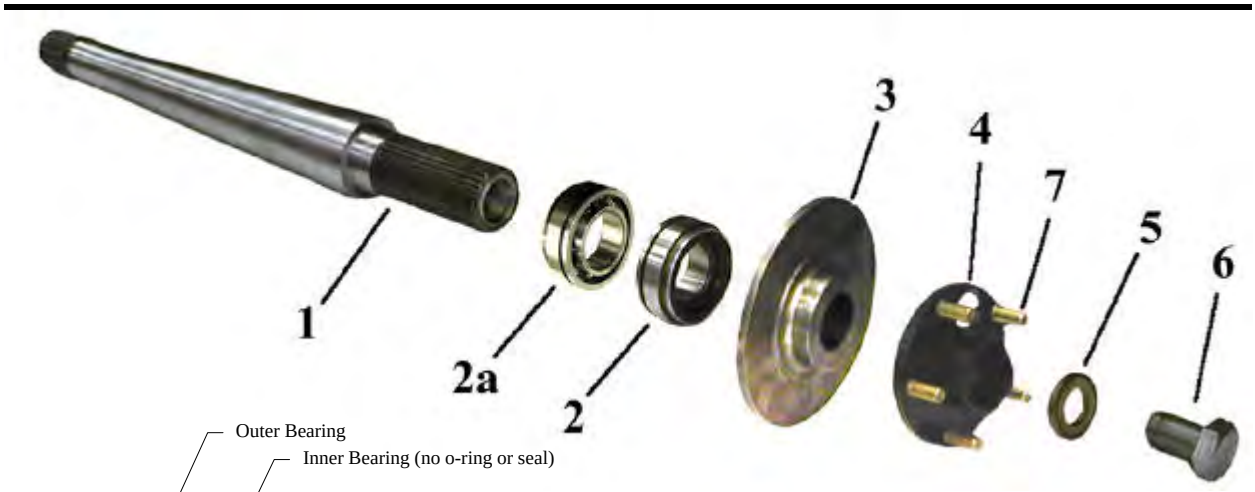

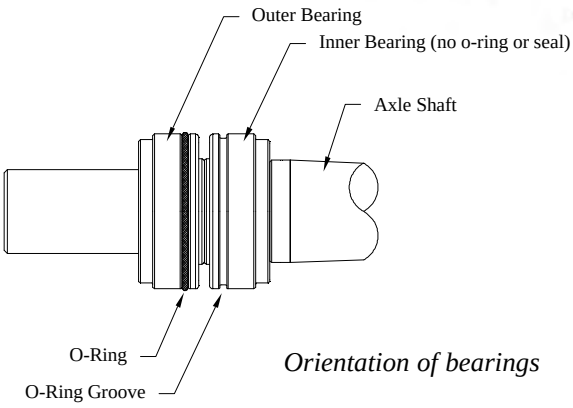

Orientation of bearings

Transmission Differential Case			
ITEM #	PART #	DESCRIPTION	QTY
9	GT-70302	M10 x 30 Bolt	12
13	GT-3287183	Ring and pinion gear set	1
14	GT-3297193	Differential case cover	1
15	GT-3287133	Adjusting ring	2
16	GT-70417	Fill/Level plug	1
17	GT-3287113	Differential housing	1
19	GT-3287143	Differential case	1
20	GT-72013	O-ring	1
22	GT-71896	M10 x 25 Bolt	12
29	GT-71978	Bearing and race	2
30	GT-70299	10mm Washer	12
31	GT-71881	Seal	1
32	GT-70052	Vent	1

Rear Axle			
ITEM #	PART #	DESCRIPTION	QTY
1	41-154-35	Axle shaft	2
2	80-505-20	Bearing, outer	2
2a	80-505-30	Bearing, inner	2
3	41-490-11	Disc brake rotor	2
4	41-172-21	Hub	2
5	88-268-63	Flat washer	2
6	88-268-30	7/8-14 x 1.5 Bolt, grade 5	2
7	96-329-10	Wheel stud	10
Not shown	92-104-10	Hub cover	2
	96-327-10	3/8X3/4,NF,2A THD,GRD5,LOC (axle retaining plate)	8

* - Not Available at Time of Printing

Rear Suspension

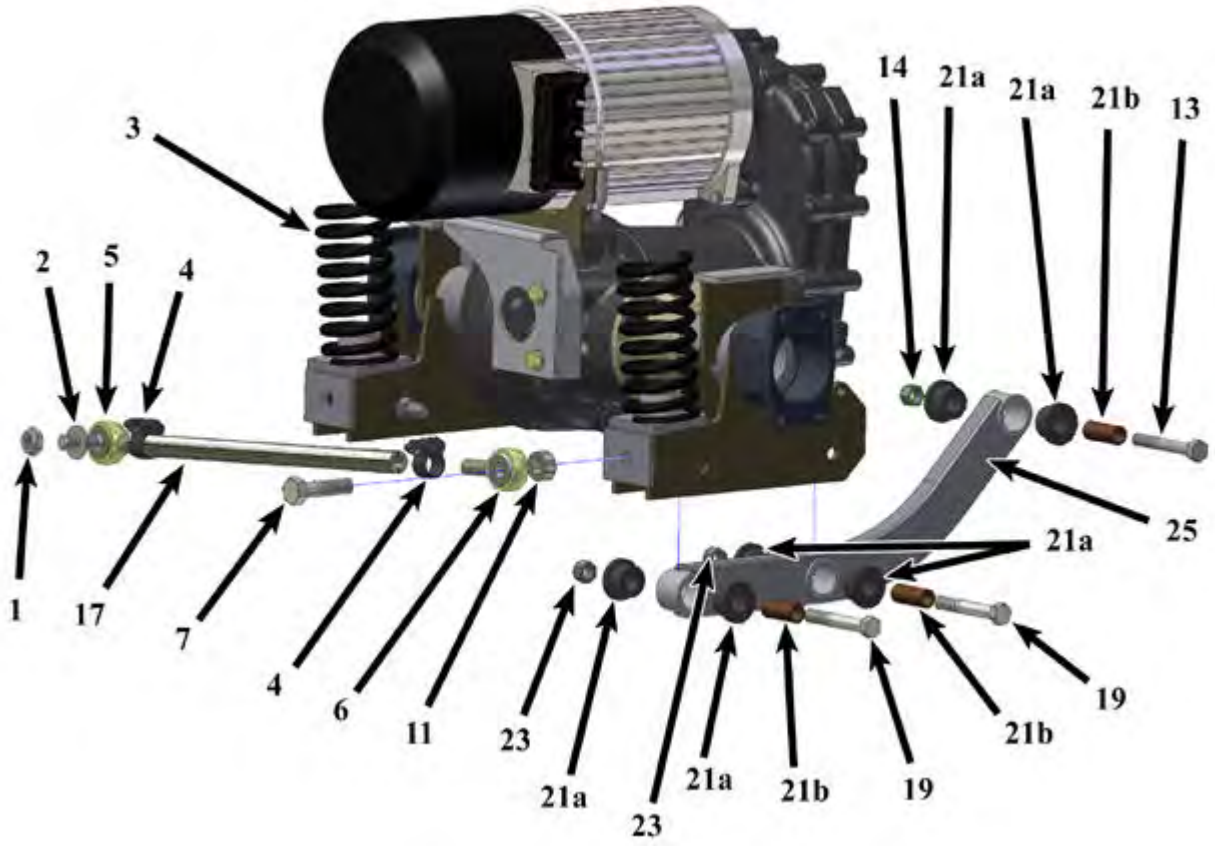

Rear Suspension			
ITEM #	PART #	DESCRIPTION	QTY
1	88-189-82	5/8NC Thin pattern lock nut	2
2	88-188-61	5/8 SAE Flat washer	1
3	85-142-00	Spring	2
4	86-510-00	Ball joint clamp	2
5	86-521-98	Rod end (left)	1
6	86-521-99	Rod end (right)	1
7	88-180-15	5/8NC x 1-3/4 Hex bolt	2
8	-	-	-
9	4GT-0161-73BB	Complete drive assembly (30:1)	1
10	-	-	-
11	17-108-00	Spacer	1
12	-	-	-
13	88-160-27	9/16 X 4" NC HEX HEAD, GR 5	2
14	88-169-81	9/16NC Lock nut	2
15	-	-	-
16	-	-	-
17	41-402-10	Panard bar	1
18	-	-	-
19	88-160-24	9/16 X 3-1/4 NC HEX HEAD, GR 5	4
20	-	-	-
21	32-249-01	Bushing, rubber	12
	32-249-02	Sleeve, steel	6
22	-	-	-
23	88-169-81	9/16 NC HEX HD LOCK NUT	4
24	-	-	-
25	00-426-04	Suspension link	2
Not Shown	98-753-15	Rubber bump stop	2
	86-007-00	Shock	2
	88-100-15	3/8NC x 1-3/4 Hex bolt (shock bolt)	4
	32-207-10	Bushing, shock	4
	88-109-81	3/8NC Lock nut (shock bolt)	4

* - Not Available at Time of Printing

Front Brakes

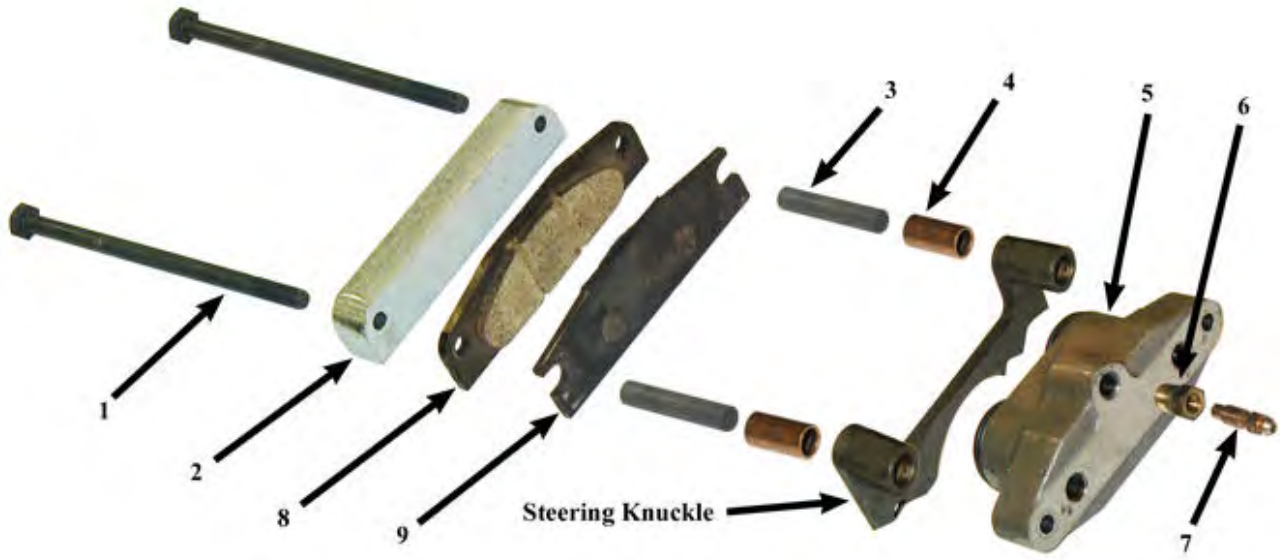

Rear Brakes

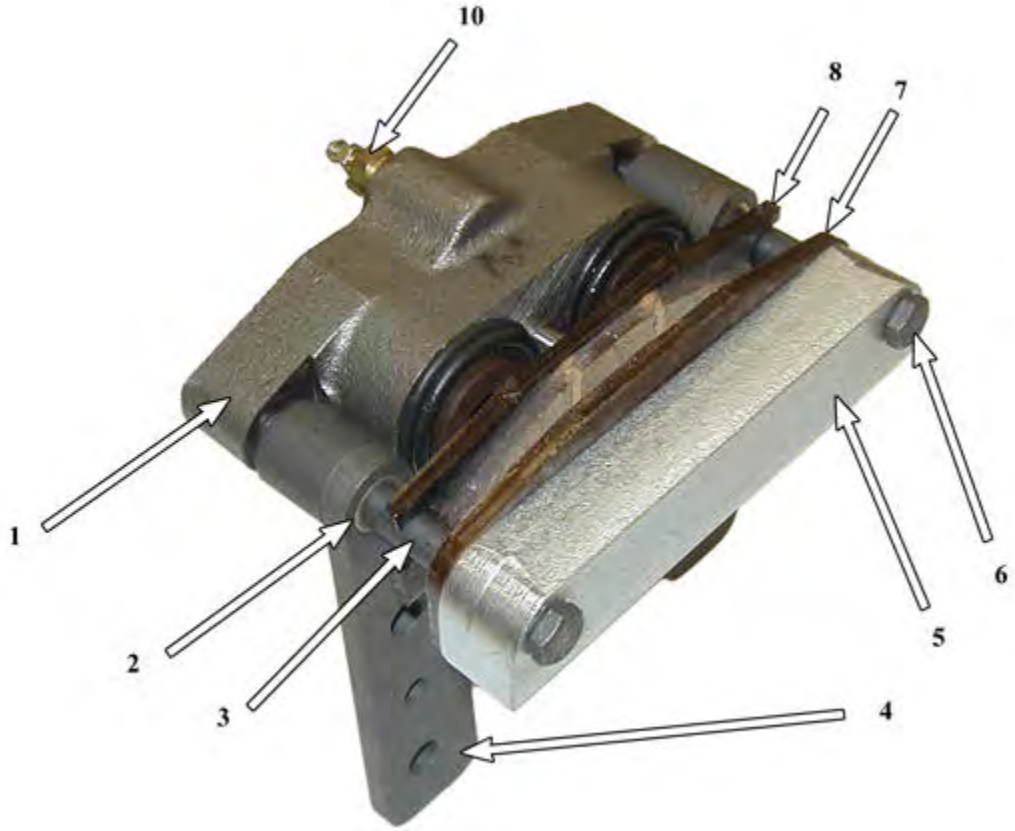

Front Brakes			
ITEM #	PART #	DESCRIPTION	QTY
1	88-067-21	Bolt	4
2	41-350-91	Plate, Secondary	2
3	41-348-58	Spacer	4
4	32-208-01	Bushing (included in rebuild kit)	4
5	41-351-35	Brake body assembly (no internaly servicable parts)	2
6	99-588-01	Bleeder adaptor	2
7	99-588-00	Bleeder valve	2
8	See rebuild kit	Brake pad, Inner	2
9	See rebuild kit	Brake pad, Outer	2
Not Shown	41-886-00	PLUG, 1/8 PIPE, HEX SOCKET	2
	88-069-82	Nut, Brake bolt	4
	41-348-61	Brake rebuild kit, 1 axle front or rear, includes #3, 4, 8, 9, and brake bolt nuts	

Rear Brakes			
ITEM #	PART #	DESCRIPTION	QTY
	41-351-80 (see note)	Complete caliper assembly (left)	1
	41-351-81 (see note)	Complete caliper assembly (right)	1
1	*	Brake body	1
2	32-208-01	Bushing (included in rebuild kit)	2
3	41-348-58	Spacer (included in rebuild kit)	4
4	41-350-28-1	Mounting Bracket	2
5	41-350-91	Secondary Plate	2
6	88-067-21	Bolt	4
	88-069-82	Nut	4
7	See rebuild kit	Brake pad, Outer	2
8	See rebuild kit	Brake pad, Inner	2
9	-	-	-
10	99-588-00	Bleeder valve	2
	99-588-01	Bleeder adaptor	2
Not Shown	41-886-00	PLUG, 1/8 PIPE, HEX SOCKET	2
	41-348-61	Brake rebuild kit, 1 axle front or rear, includes #2, 3, 6 (nut), 7, 8	
* - Not available seperatly, order complete caliper assembly			

Note: Replacement brake assembly may be equipped with a park brake linkage. This linkage should be removed before installation on the vehicle.

* - Not Available at Time of Printing

Brake Lines

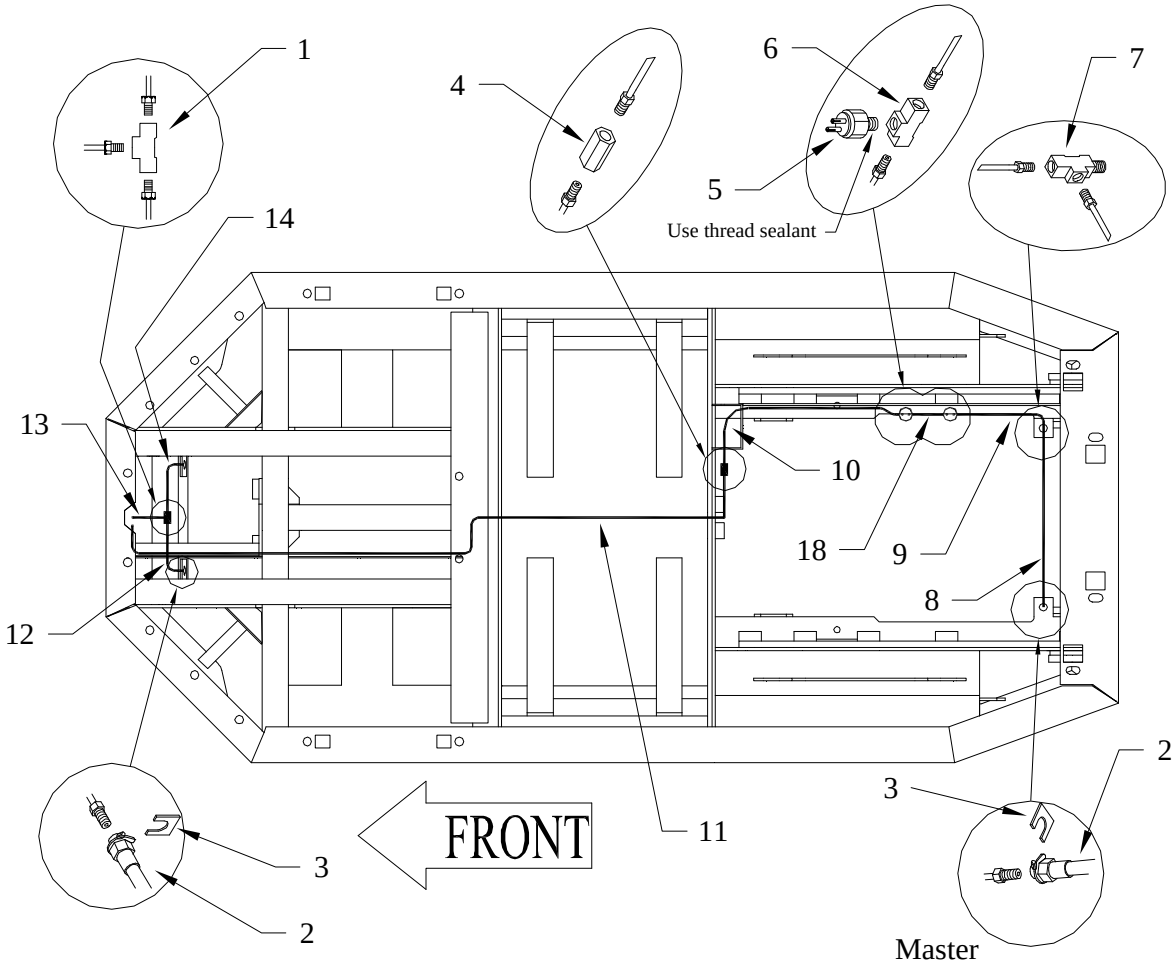
1
4
6
7
5
Use thread sealant
14
13
10
18
9
8
12
2
3
FRONT
11
3
2

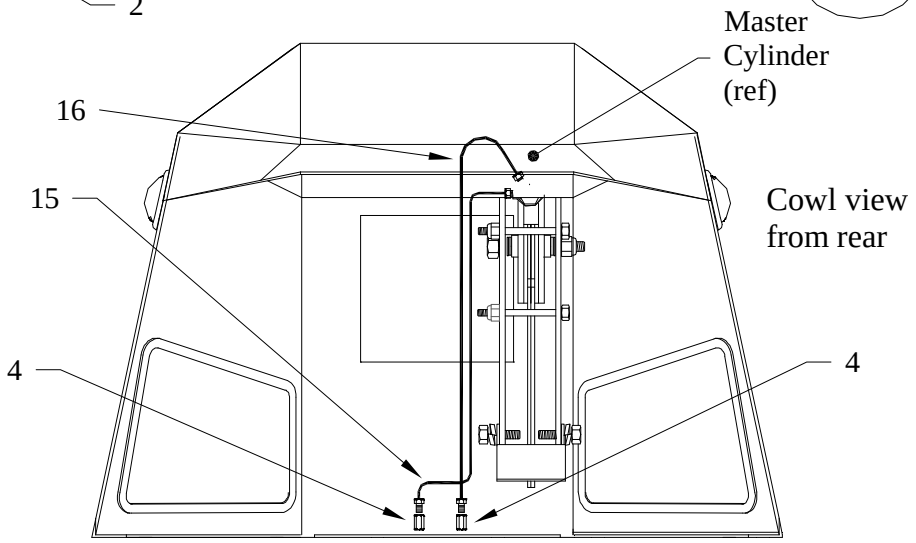
Master
Cylinder
(ref)
16
15
Cowl view
from rear
4
4

Brake Lines			
ITEM #	PART #	DESCRIPTION	QTY
1	99-564-00	T-fitting	2
2	99-580-10	Brake hose	4
3	99-576-00	Brake hose clip	4
4	99-575-00	Coupler	3
5a	71-110-00	Brake light switch	1
5b		Brake regen switch	1
6	99-591-00	Brake light switch/regen switch adaptor	2
7	99-559-00	T-fitting	1
8	99-604-66	Brake line	1
9	99-600-58	Brake line	1
10	99-605-26	Brake line	1
11	99-609-26	Brake line	1
12	99-600-57	Brake line	1
13	99-604-65	Brake line	1
14	99-600-56	Brake line	1
15	99-605-28	Brale line	1
16	99-605-27	Brake line	1
17	See Brake Linkage (foot brake)	Master cylinder	
18	99-600-58	Brake line	1
Not shown	99-575-32	Adapter, 3/16 tube to 10mm flare), used on master cylinder	2
	99-575-10	Brake hose adaptor, 3/16 tube to 1/8 pipe, used on wheel cylinders	4

* - Not Available at Time of Printing

Brake linkage (foot brake)

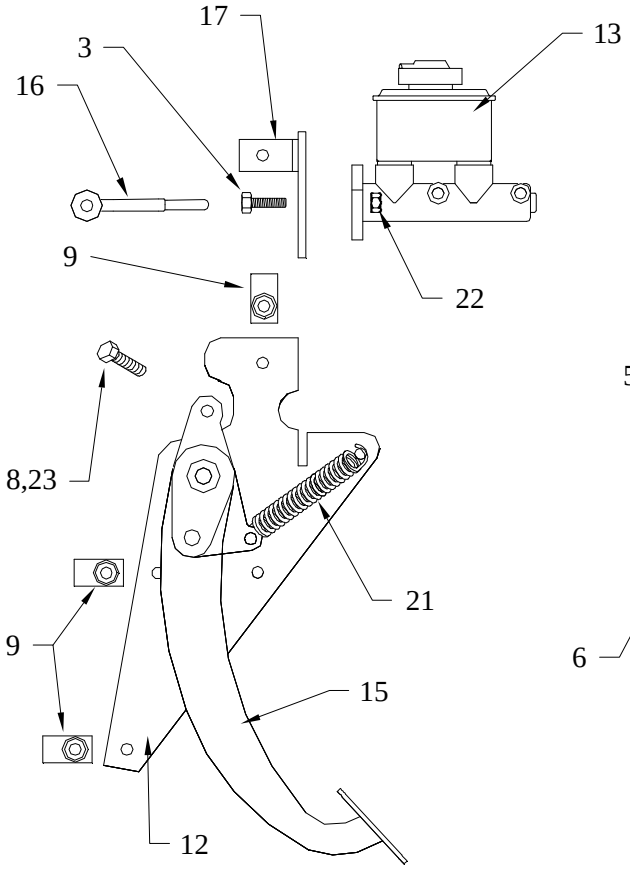

Left side plate removed for clarity

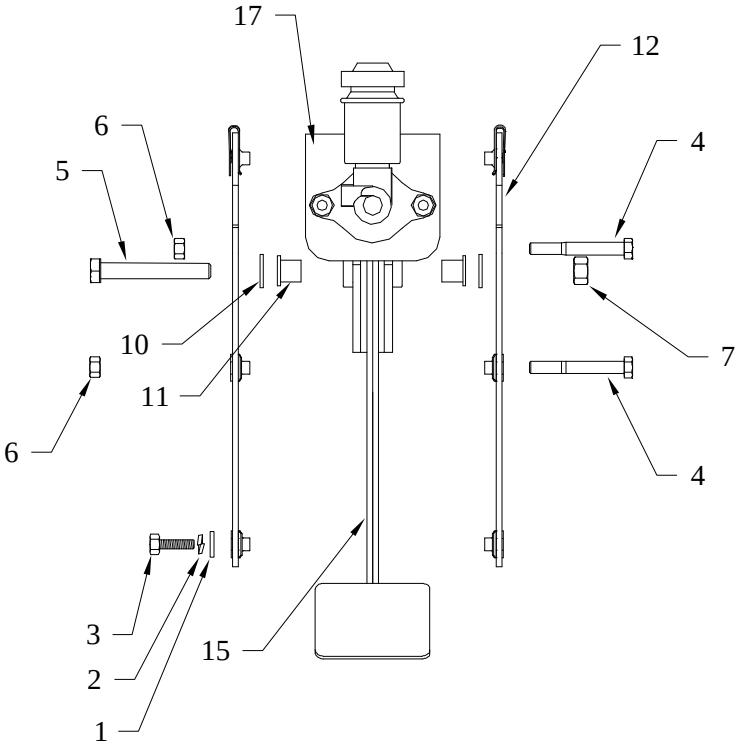

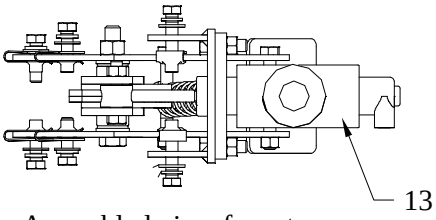

Assembled view from top

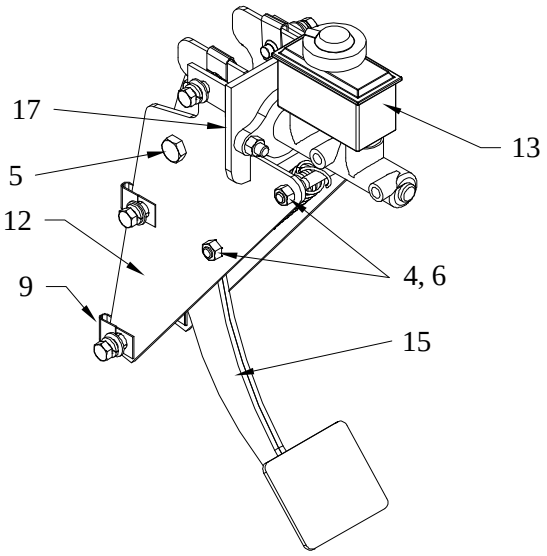

Brake Linkage			
ITEM #	PART #	DESCRIPTION	QTY
1	88-108-61	3/8 SAE Flat washer	6
2	88-108-62	3/8 Split lock washer	6
3	88-101-13	3/8NC x 1-1/4 Hex bolt, Grade 5	8
4	88-101-21	3/8NC x 3 Hex bolt, Grade 5	2
5	88-140-22	1/2NC x 3 Hex bolt	1
6	88-109-81	3/8NC Hex lock nut	2
7	88-149-81	1/2NC Hex lock nut	1
8	88-100-15	3/8NC x 1-3/4 Hex bolt	1
9	97-211-30	Blind nut	6
10	88-148-61	1/2 SAE Flat washer	2
11	32-215-00	Bushing	2
12	41-426-00	Mounting plate	2
13	99-511-20	Master cylinder	1
14	-	-	-
15	41-426-11	Brake pedal	1
16	00-426-06	Push rod	1
17	00-426-05	Master cylinder mounting bracket	1
18	-	-	-
19	-	-	-
20	-	-	-
21	85-250-00	Spring	1
22	-	-	-
23	88-109-81	3/8 NC Lock nut	1

* - Not Available at Time of Printing

Motor

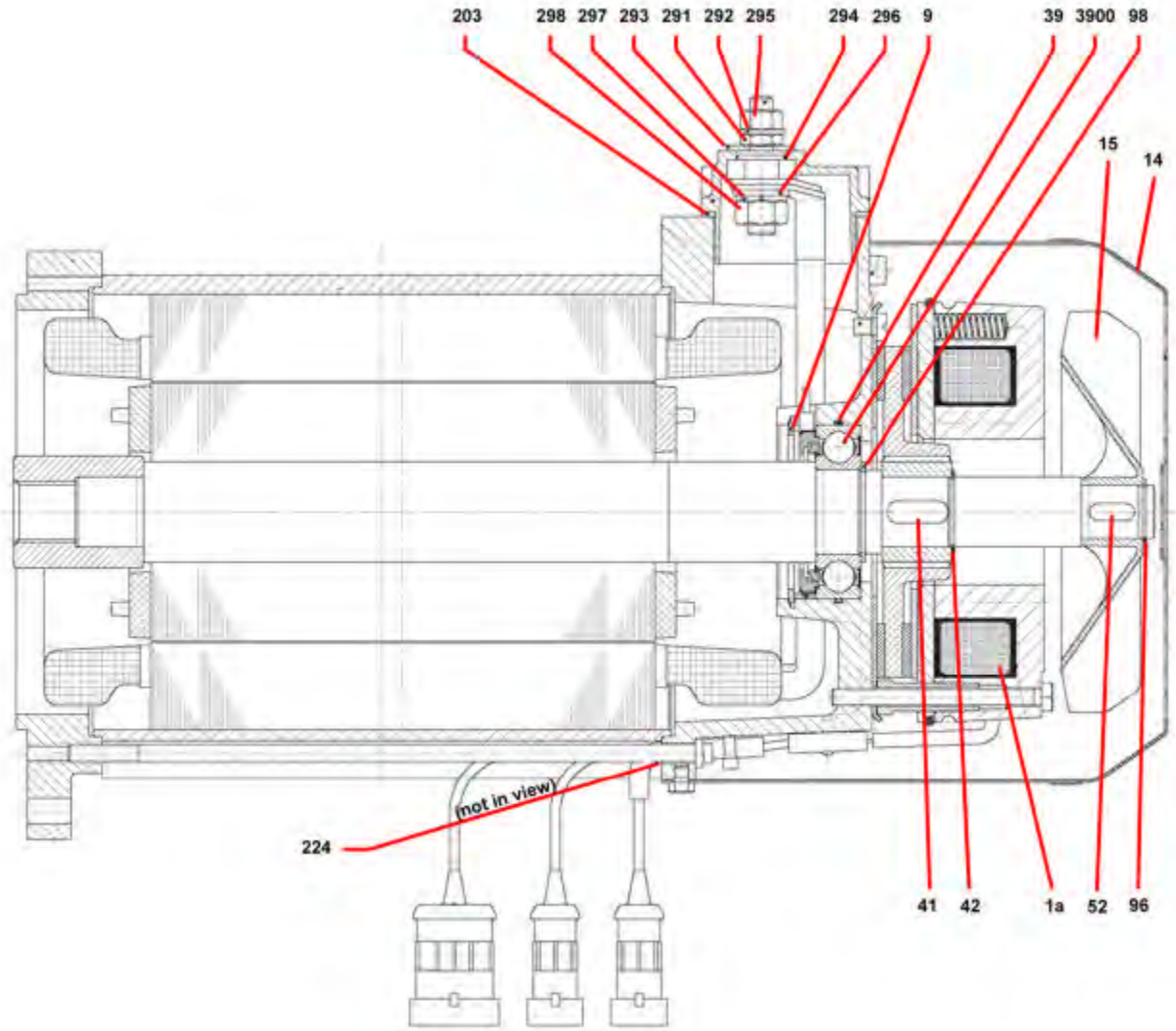
203
298
297
293
291
292
295
294
296
9
39
3900
98
15
14
(not in view)
224
41
42
1a
52
96

70-059-41 Motor Spec # ZFB40SO/4 DF100L-4			
ITEM #	PART #	DESCRIPTION	QTY
1a	41-354-05	Brake	1
9	70-400-14	Snap ring	1
14	70-400-12	Fan Shroud	1
15	70-400-11	Fan	1
39	70-400-15	O-ring	1
41	70-400-16	Key	1
42	70-400-17	Snap ring	1
52	70-400-21	Key	1
96	70-400-18	Snap ring	1
98	70-400-19	Snap ring	1
203	70-400-13	Seal	1
224	70-400-09	Rubber Grommet	2
206	70-260-00	Terminal stud	3
291		Hex nut	3
292		Washer	3
293		Washer	3
294		O-ring	3
295		Hex nut	3
296		Washer	3
297		Lock washer	3
298		hex nut	3
3900	80-216-05	Sensor bearing	1
Not Shown	45-508-30	Rubber seal around brake	1

* - Not Available at Time of Printing

Throttle linkage

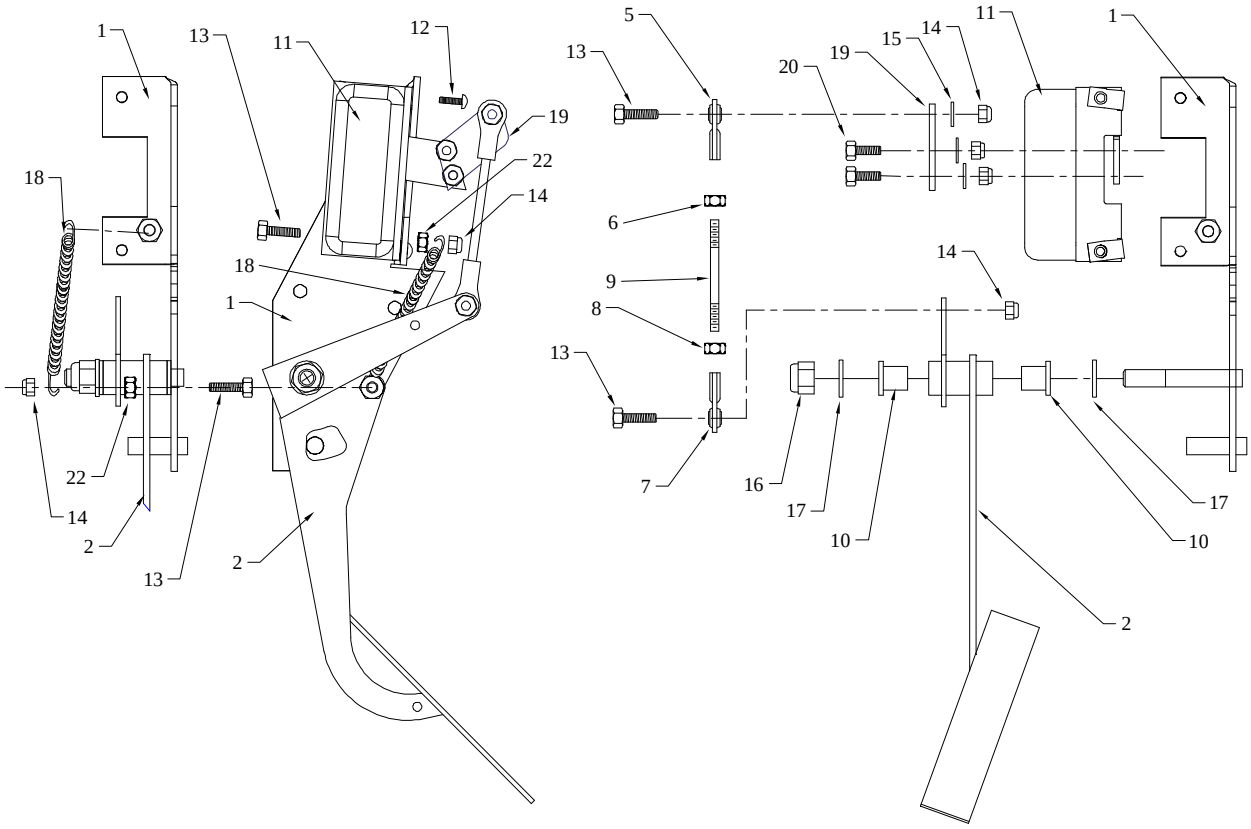

Throttle Linkage			
ITEM #	PART #	DESCRIPTION	QTY
1	00-425-21	Mounting bracket	1
2	00-425-09	Accelerator pedal arm	1
3	-	-	-
4	-	-	-
5	86-503-98	Rod end, left hand thread	1
6	97-211-00	1/4NF Hex nut, left hand thread	1
7	86-503-99	Rod end, right hand thread	1
8	88-079-80	1/4NF Hex nut	1
9	50-002-13	Link	1
10	32-215-00	Bushing	2
11	62-033-48	Accelerator module	1
12	88-065-11	1/4NC x 1 Phillips truss head screw	2
13	88-060-11	1/4NC x 1 Hex bolt	4
14	88-069-81	1/4NC Nylon locknut	6
15	88-068-61	1/4 SAE Flat washer	2
16	88-159-84	1/2NF Nylon lock nut	1
17	88-148-61	1/2 SAE Flat washer	2
18	85-295-00	Spring	1
19	62-033-28	Bracket	1
20	88-060-09	1/4NC x 3/4 Hex bolt	2
21	-	-	-
22	88-069-87	1/1NC KEPS nut	2
23	-	-	-

Wheels and Tires

Wheels and Tires			
ITEM #	PART #	DESCRIPTION	QTY
Not Shown	368-00127	INNACUSH WHEEL, 5 BOLT	4
	-	-	-
	13-906-10	TIRE, 15-1/2X6X10,FINGER, TRD	4
	-	-	-
	13-952-00	Tire/Wheel assembly (includes 13-906-10 and 368-00127)	4
	97-236-00	Lug nut	20

* - Not Available at Time of Printing

Instrument Panel (dash)

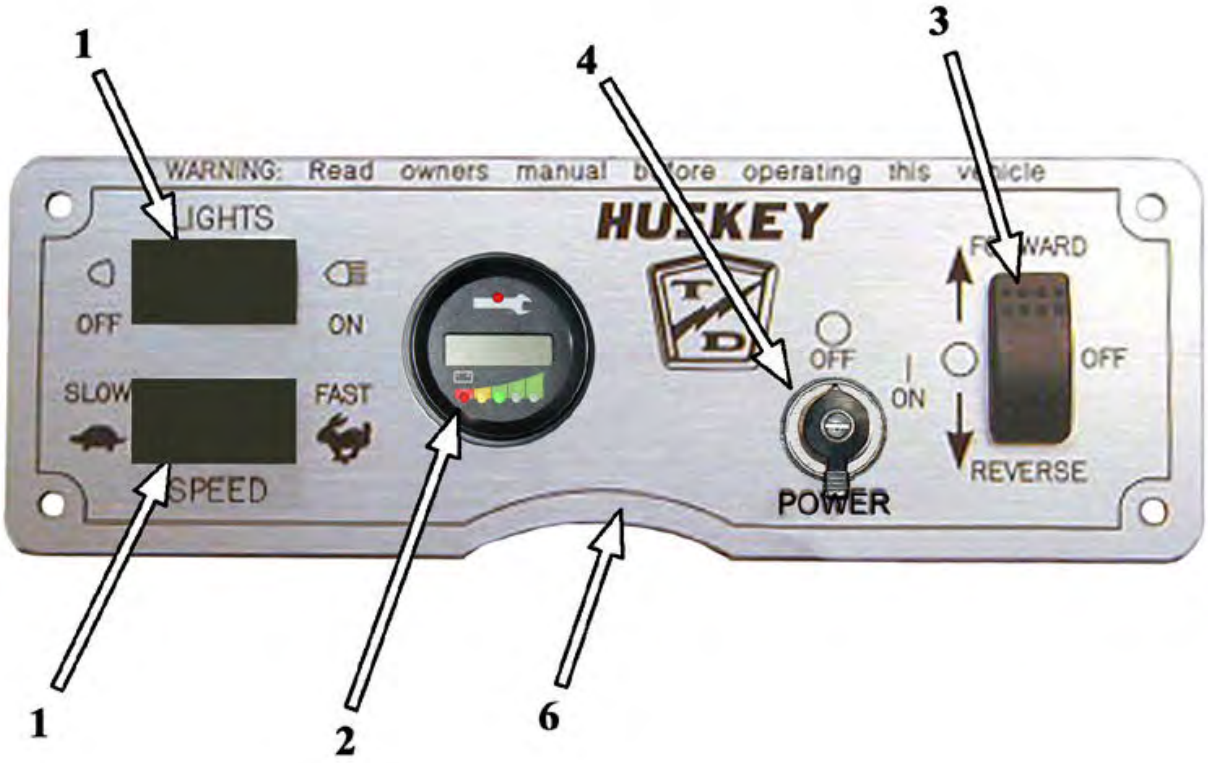

Instrument Panel			
ITEM #	PART #	DESCRIPTION	QTY
1	71-039-21	Hole plug	2
2	74-010-20	Gauge, Curtis Spy Glass	1
3	71-039-02	Forward and Reverse switch	1
4	500128	Ignition switch	1
5	-	-	-
6	94-304-24	Dash panel	1
Not shown	97-211-20	1/4NC Blind nut (dash mounting)	4
Not shown	88-065-09	1/4NC x 3/4 Truss head machine screw (dash mounting)	4

* - Not Available at Time of Printing

Speed Control Panel

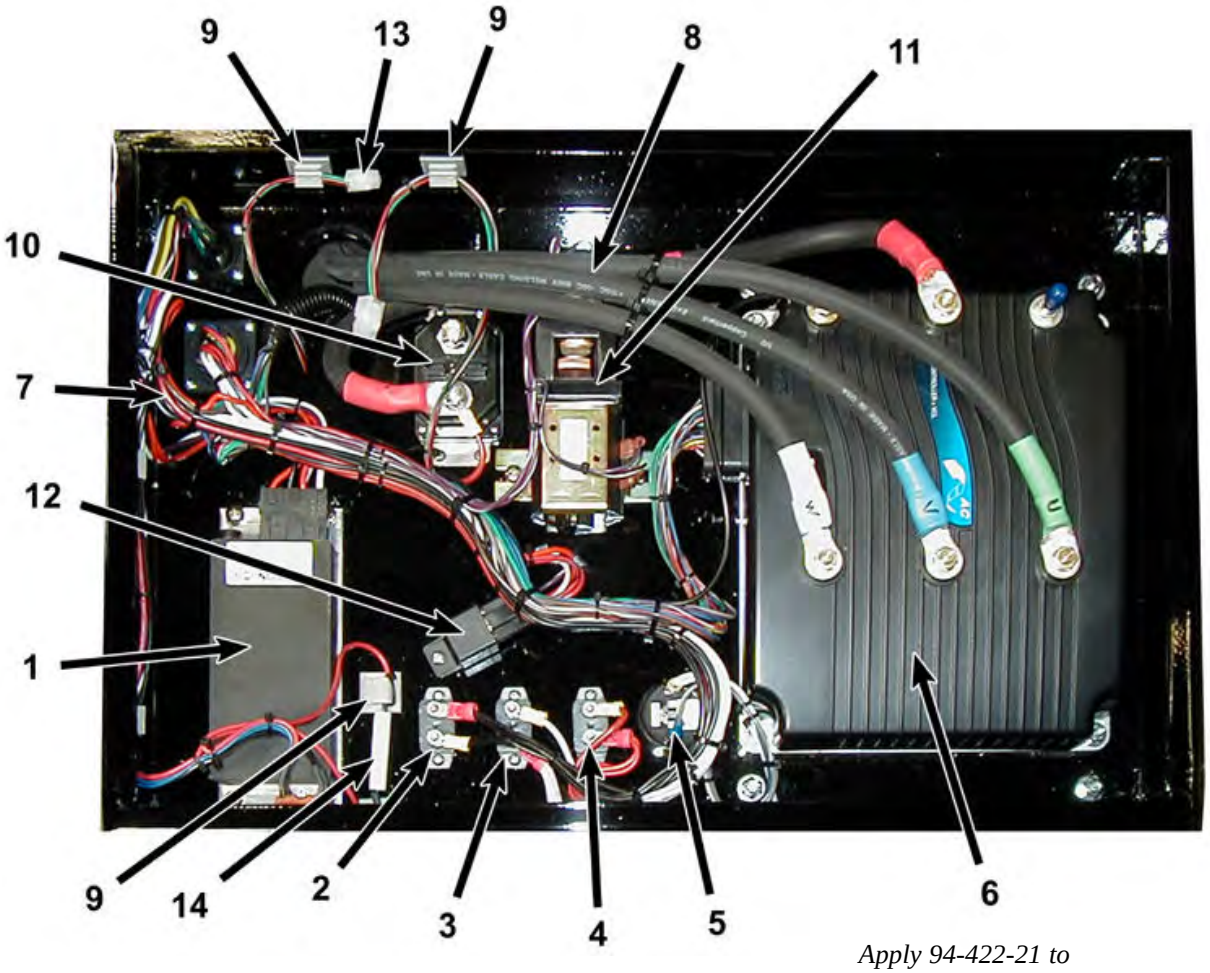

Apply 94-422-21 to mounting surface of #6

Control Panel			
ITEM #	PART #	DESCRIPTION	QTY
1	73-012-32	DC-DC converter	1
	88-838-06	#14X1/2 PAN HD SCR TYPE D THD	4
2	79-840-00	Circuit breaker, 10A	1
3	79-840-20	Circuit breaker, 20A	1
4	79-840-20	Circuit breaker, 20A	1
	88-818-06	#8 X 1/2 PAN HD SCR TYPE B THD (to mount items 2, 3, 4)	6
5	73-005-04	Motion alarm	1
6	62-400-41	Motor speed control	1
	88-060-13	1/4 X 1-1/4 NC HEX HD SCR, controller mounting	4
	88-069-81	1/4NC NYL INS LOCKNUT,PLTD, controller mounting	4
	88-068-61	1/4 SAE WASHER, controller mounting	4
7	75-153-16*	*Harness, control	1
	88-818-02	#8 X 1/4 PAN HD SCR TYPE B THD (mount connectors)	8
8	75-153-01-GRAY	Harness, power	1
9	96-650-02	Wire clip	4
10	79-844-20	Circuit breaker, 200A	1
	88-818-06	#8 X 1/2 PAN HD SCR TYPE B THD	4
11	71-210-13	Line contactor	1
	71-210-11	Mounting bracker, line contactor	1
	88-838-06	#14X1/2 PAN HD SCR TYPE D THD	2
12	71-303-01	Relay	1
	88-818-06	#8 X 1/2 PAN HD SCR TYPE B THD	1
13	75-153-03	Harness, Spy glass	1
14	78-307-25	RESISTOR, 25 OHM, 10 W	2
Not Shown	98-451-20	TAPE,FOAM,1/2 WIDE X 1/8 THIc (lid gasket)	6'
	94-422-21	Heat sink paste, 13.5 oz. tube	-
	73-004-20	Horn, mounted under panel box	1
	88-838-06	#14X1/2 PAN HD SCR TYPE D THD	2
	98-603-00	GROMMET,RUBBER,3/8X.625X.188>	1
	98-599-20	BUSHING,SNAP,PLASTIC,2.5 HOLE	1
	97-211-30	U-NUT, 3/8-16, panel mounting to frame	4
	89-080-16	M8 X 1.25 X 16MM HEX BOLT (controller terminal)	5
	89-060-17	WASHER,LOCK,M8 HDS,DIN#6796>	5
	71-120-33	Brake bypass switch (mounted on right side of panel)	1

** - Dose not include #14 resistor. Brake bypass switch must be soldered to harness.*

* - Not Available at Time of Printing

Miscellaneous Electrical

Miscellaneous Wire Harness Clamps

Miscellaneous Electrical			
ITEM #	PART #	DESCRIPTION	QTY
Not Shown	75-152-42	Chassis Control Harness	1
	75-153-17	Dash Harness	1
	75-152-43	Tail light harness	1
	94-422-10	Dielectric grease for harness connectors	
	98-599-15	Plastic grommet for 1.75 hole	
	98-599-20	Plastic Grommet for 2.5 hole	
	502136	Horn switch (floorboard)	1
	71-102-25	Seat interlock switch	1
2	96-650-01	Wire Harness Clip, stick on	
3	96-642-00	Wire harness Clip, push mount	
4	96-629-80 (not shown)	Clamp, Rubber Lined 3/16 ID	
	96-630-00 (not shown)	Clamp, Rubber Lined 5/8 ID	
	96-630-50 (not shown)	Clamp, Rubber Lined 5/8 ID (.265 mounting hole)	
	96-631-00 (not shown)	Clamp, Rubber Lined 3/4 ID	
	96-631-10 (shown)	Clamp, Rubber Lined 1.0 ID	
	96-631-15 (not shown	Clamp, Rubber Lined 1-1/2 ID	
6	96-640-00	Clamp, 3/16 Push Mount	
7	96-624-00	Clamp, 1/4 Jiffy Clip	
	96-625-00 (not shown)	Clamp, 5/16 Jiffy Clip	
8	96-626-00	Clamp, 7/8 Jiffy Clip	

* - Not Available at Time of Printing

Lighting System

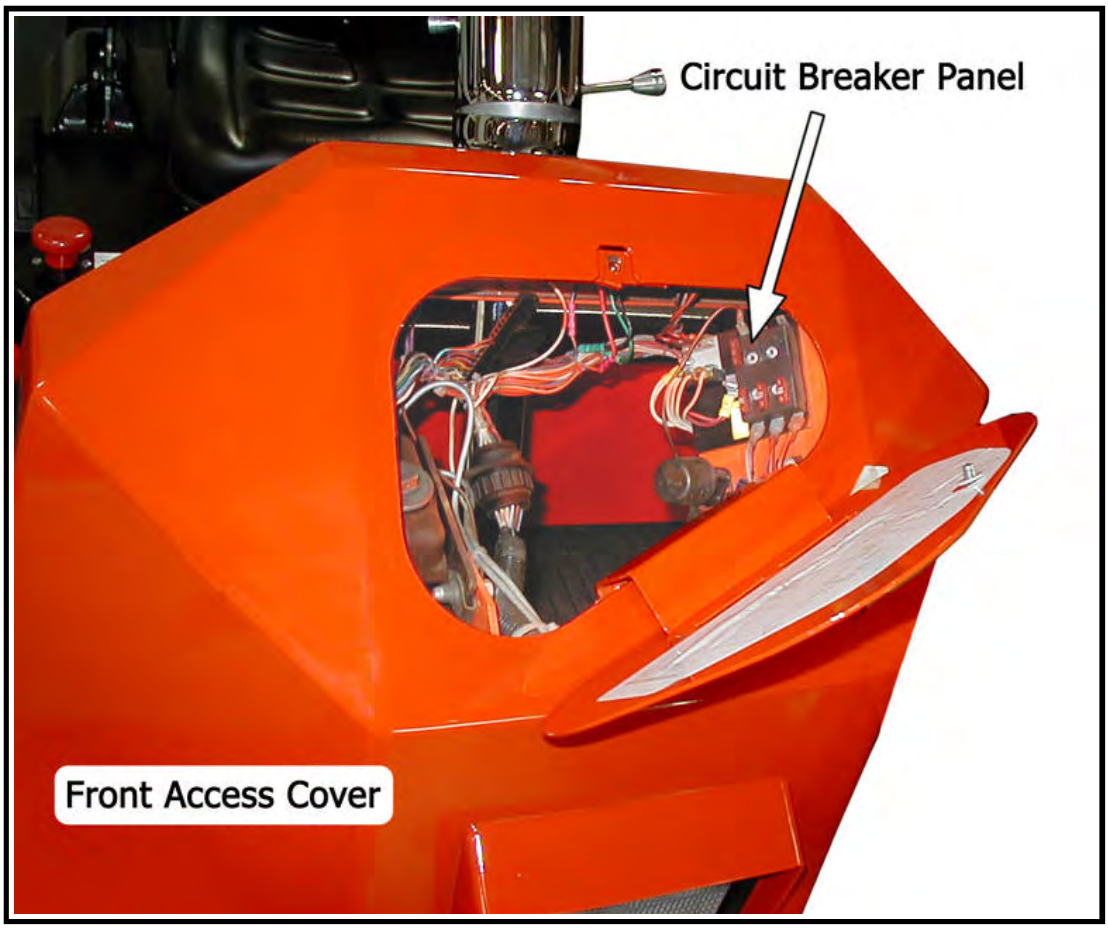

Lights and Reflectors			
ITEM #	PART #	DESCRIPTION	QTY
-	72-035-01	Headlight	1
-	01-426-03	Mount, Headlight	1
-	88-038-06	Screw, Heallight Mount	4
-	72-022-04	Tail light	2
-	01-426-44	Mount, Tail Light	2
-	72-025-13	Pigtail, Tail Light	2
-	88-034-14	Screw, Tail Light Mount	4
-	79-820-03	Circuit Breaker, 10A	3
-	78-010-30	Circuit Breaker, panel	1
-	502142	REFLECTOR, RED	4
-	502143	REFLECTOR, AMBER	4

* - Not Available at Time of Printing

Seat Cushions and Deck

Note: ABS plastic deck shown, your deck be different. Refer to parts list.

#1 on cowl (optional)

Seat Cushions and Deck			
ITEM #	PART #	DESCRIPTION	QTY
1	71-120-14	Emergency stop switch on cowl (optional)	1
2	-	-	-
3	95-512-00	Deck handle	2
4	90-160-70	Seat assembly	1
5	90-160-60	Arm rest kit	1
6	00-426-08	TOP,METAL,BATTERY LID,AC	1
7	90-160-71	Seat spacer	2
8	88-080-13	5/16NC x 1-1/4 Hex bolt	4
	88-089-81	5/16NC Lock nut	4
	88-088-60	5/16 Cut flat washer	4

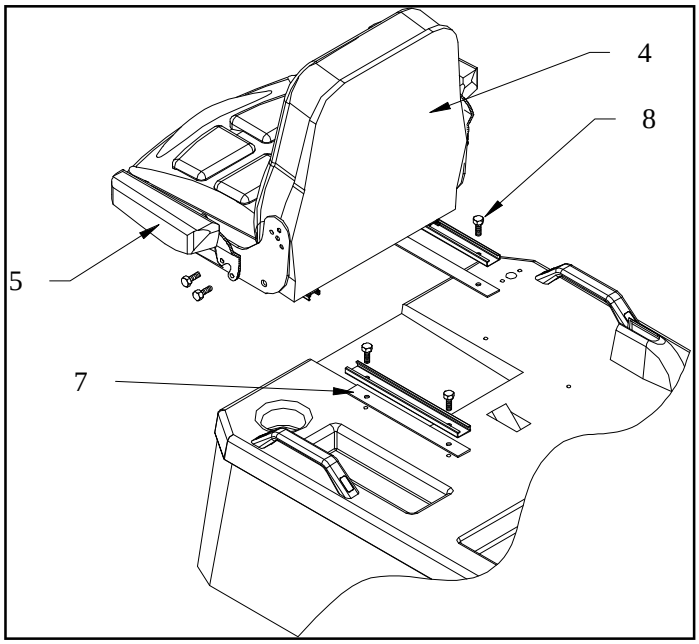

Seat Mounting

* - Not Available at Time of Printing

Decals

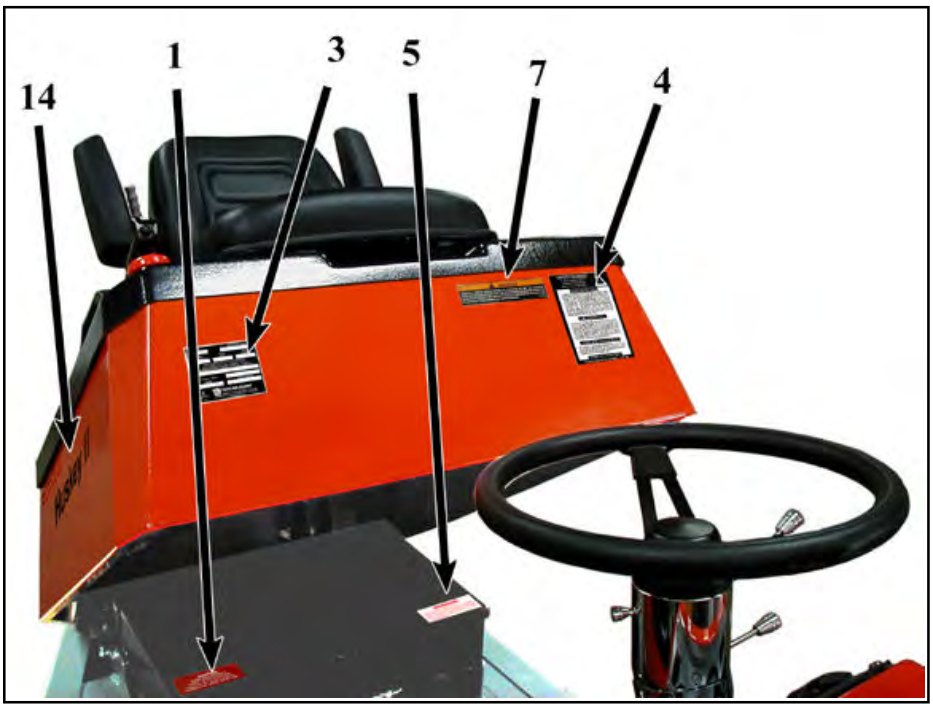
14
1
3
5
7
4

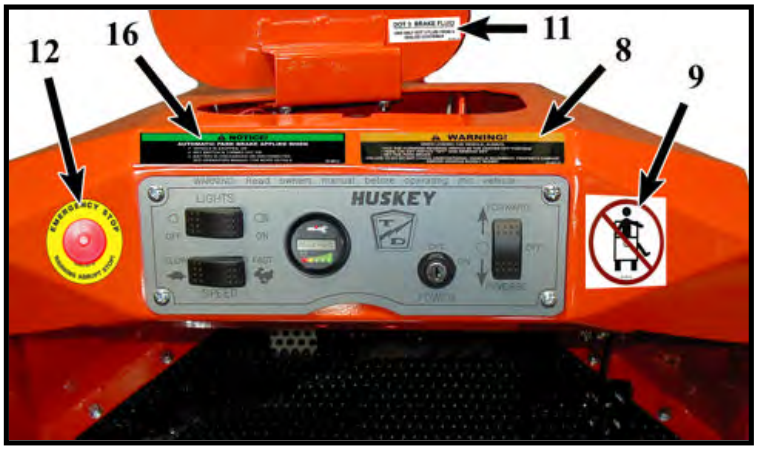
12
16
11
8
9
WARNING!
HUSKEY
LIGHTS
SPEED
POWER
FORWARD
REVERSE

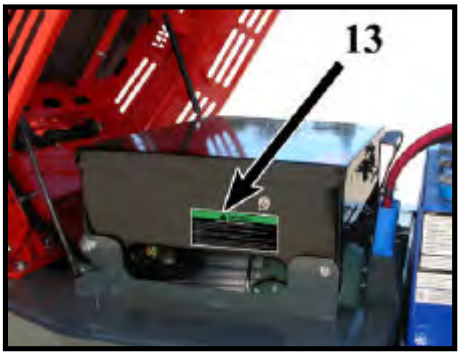
13

Decals			
ITEM #	PART #	DESCRIPTION	QTY
1	94-319-00	Disconnect the battery	1
2	-	-	-
3	94-373-12	Data plate (decal)	1
4	94-313-20	Safety waring	1
5	94-313-00	Explosive gases	1
6	-	-	-
7	94-384-01	Not a motor vehicle	1
8	94-384-14	When leaving vehicle	1
9	94-301-44	Keep arms and legs inside	1
10	-	-	-
11	94-301-41	DOT 3 brake fluid	1
12	94-384-24	**DECAL, EMERGENCY STOP (optional)	1
13	94-384-06	Brake bypass	1
15	94-301-17	AC	2
16	94-384-21	Auto park brake	1
Not Shown	94-331-13	Wire diagram, located in control box	1
	94-331-10	DECAL,FEDEX LOGO	2
	94-318-80	DECAL,ASSET NUMBER,5-DIGIT	2

* - Not Available at Time of Printing

Frame Components

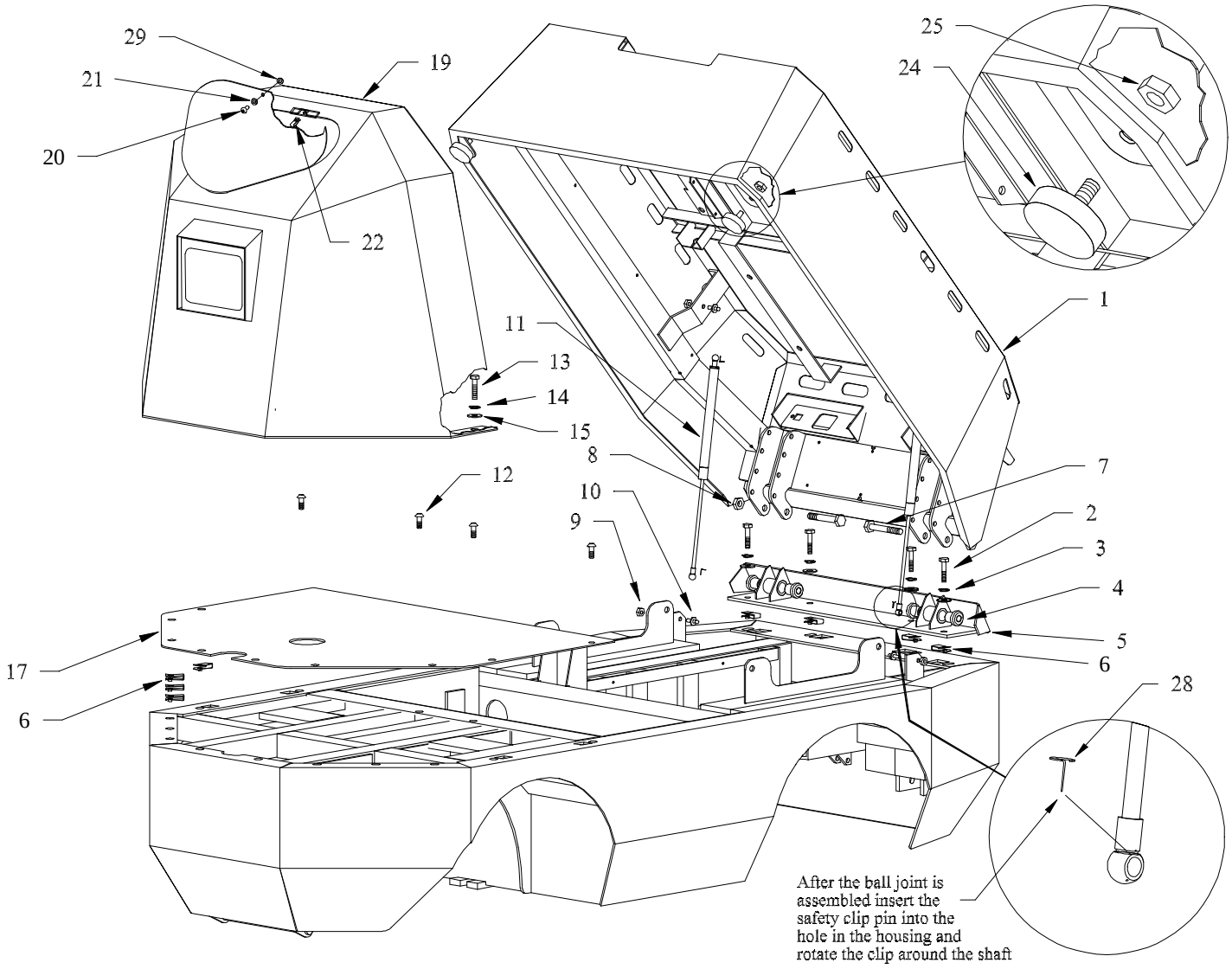

Frame Components			
ITEM #	PART #	DESCRIPTION	QTY
1	00-426-02	Battery cover (not painted)	1
2	88-100-14	3/8 x 1-1/2 Hex bolt	4
3	88-108-62	3/8 Split lock washer	4
4	32-214-50	Bushing	4
5	00-425-16	Mounting bracket (not painted)	1
6	97-211-30	3/8 blind nut	18
7	96-240-00	1/2NC x 4 Hex bolt	2
8	88-149-81	1/2NC lock nut	2
9	88-089-81	5/16NC lock nut	4
10	85-195-01	Gas spring mount	4
11	85-195-00	Gas spring	2
12	96-245-05	3/8NC Button head socked screw	4
13	88-100-14	3/8NC x 1-1/2 Hex bolt	10
14	88-106-62	3/8 Split lock washer	10
15	88-108-61	3/8 SAE Flat washer	10
16	-	-	-
17	00-426-03	Floorboard	1
18	-	-	-
19	00-426-01	Front cowl	1
20	88-065-12	1/4NC x 1 Truss head machine screw	1
21	97-169-10	Nylon washer	1
22	97-211-20	1/4NC Blind nut	1
23	-	-	-
24	98-753-12	Bumper	2
25	88-109-81	3/8NC lock nut	2
26	-	-	-
27	-	-	-
28	85-195-02	Retaining clip	4
29	96-245-20	Retaining washer	1
Not Shown	00-425-10	GUARD,WIRE, font cowl	1
	00-425-11	MNT,WIRE GUARD, front cowl	1
	00-426-12	COUNTER WEIGHT, REAR, C4-26	1
	01-426-15	PLATE, BUMPER FRONT	1
	98-451-20	TAPE,FOAM,1/2 WIDE X 1/8 THICK	13'

* - Not Available at Time of Printing

Hitch and Hitch Release

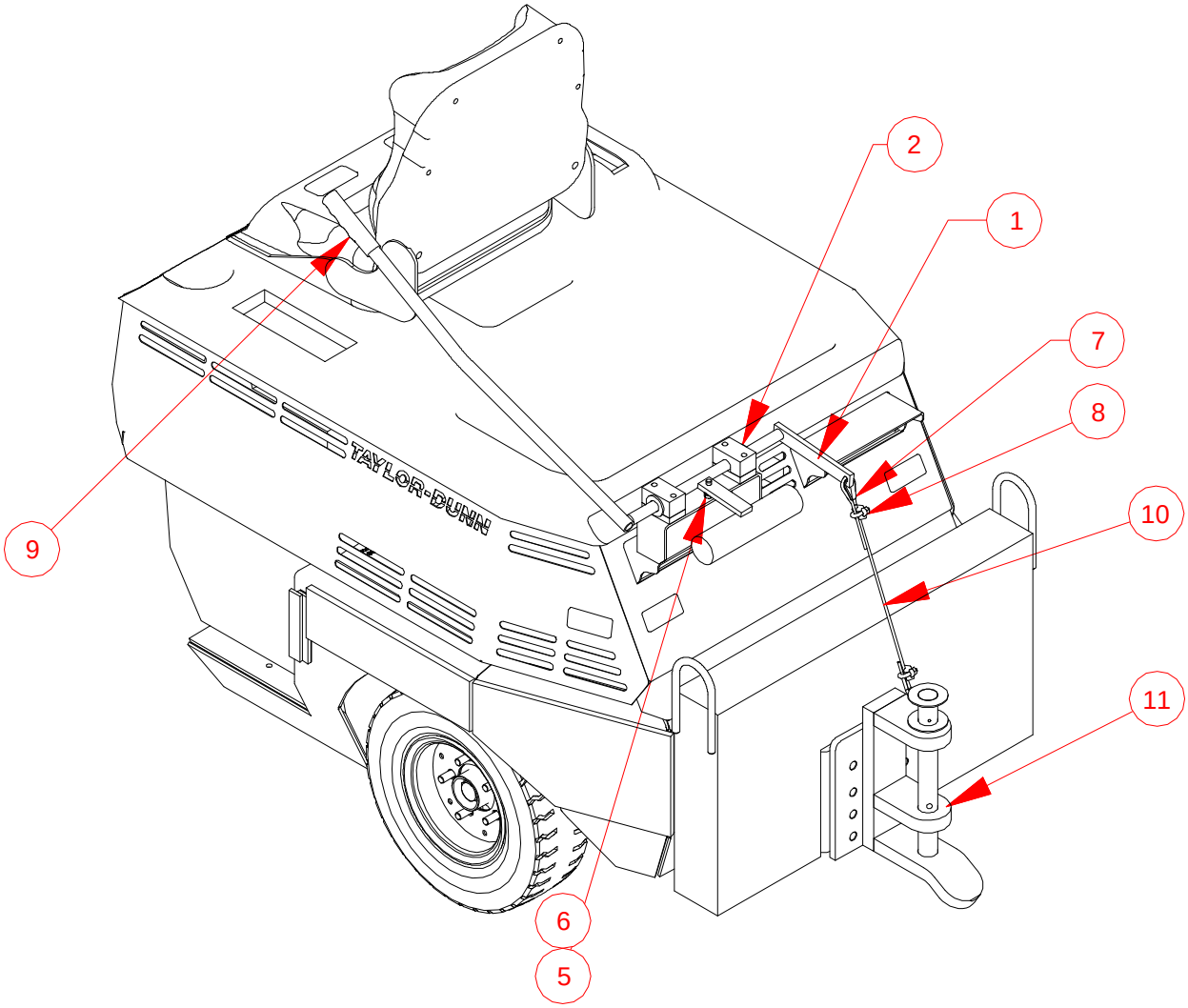

Hitch and Hitch Release			
ITEM #	PART #	DESCRIPTION	QTY
1	00-426-14	Lever	1
2	02-426-00	Pillow block (lower)	2
	84-006-00	Pillow block (upper)	2
	88-088-61	5/16 SAE WASHER	8
	88-089-81	5/16 NC LOCK NUT	4
	88-080-18	5/16 X 2-1/2NC HEX HD SCR	4
3	-	-	-
4	-	-	-
5	88-100-11	3/8 X 1 NC HEX HD SCREW	1
6	88-119-82	3/8 NC HEAV HEX NUT,PLAIN	1
7	96-812-21	THIMBLE FOR STEEL ROPE,3/16" D	1
8	96-812-22	Clamp	2
9	98-351-00	HAND GRIP	1
10	96-812-23	Cable	1
11	503479	E-HITCH ASSY 1-1/4 PIN W/RAMP	1
	88-151-16	1/2X2 NF HEX HD SCREW,GR-5	8
	88-159-61	1/2 WASHER, HEAVY DUTY	8
	88-159-84	LOCKNUT,NY-LOCK, 1/2-20 NF	8

* - Not Available at Time of Printing

Charger

ITEM #	PART #	DESCRIPTION	QTY
	79-356-10	CHARGER, 48V, D1-24-600, Single phase, 60Hz	1
	79-356-11	CHARGER, 48V, D3G-24-680, 3-phase, 60Hz	1
	79-356-12	CHARGER, 48V, EF1-24-600D, Single phase, 50Hz	1
	79-356-13	CHARGER, 48V, EF3-24-600D, 3-Phase, 50Hz	1

Battery

ITEM #	PART #	DESCRIPTION	QTY
-	77-059-10	BATTERY,48V,340AMPS	1
1	76-020-26	HANDLE, SB CONNECTOR	1
2	88-060-15	1/4 X 1-3/4 NC HEX HD CAP SCR	2
3	76-020-25	CONNECTOR, SB CABLE CLAMP	1
4	76-020-11	SB 350 Gray	2
5	88-068-60	1/4 CUT WASHER	2
	88-069-81	1/4NC NYL INS LOCKNUT,PLTD	2

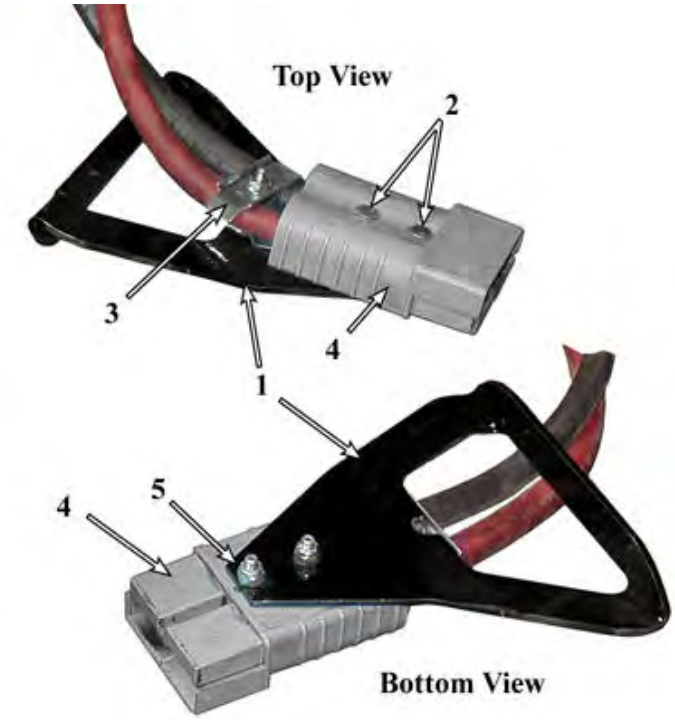

Appendixes

Contents

APPENDIX A: SPECIAL TOOLS

DESCRIPTION	PURPOSE	PART #
Test Light	Used for testing electrical circuits. Powered by the truck batteries, switchable for 12, 24, 36, and 48 volts.	62-027-00
Accelerator Test Harness	Used to test the solid state accellerator module part number series 62-033-XX.	62-027-31
User level maintenance handset	Used for diagnostics of the AC motor speed control system.	62-027-64
Disc Brake Boot Installation Tool	Used to install the rubber boot on all disc brake bodies.	41-350-13
Pin Removing Tool	Used to remove pins and sockets from AMP connectors.	75-440-55
Pin Removing Tool	Used to remove pins and sockets from MOLEX connectors.	75-442-55
Hydrometer	Used to check the specific gravity of battery electrolyte.	77-200-00
Battery Filler	Used to safely add water to batteries.	77-201-00

APPENDIX B: SUGGESTED TORQUE LIMITS FOR STANDARD HARDWARE

HARDWARE IDENTIFICATION

Standard Head Markings

NOTE: Torque value used should be for lowest grade of hardware used. If a grade 2 nut is used on a grade 8 bolt, use grade 2 torque value.

NOTE: Toque values specified are for clean dry threads.

Hex Bolts

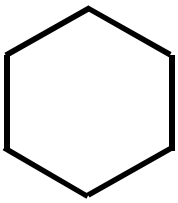

S.A.E. Grade 2

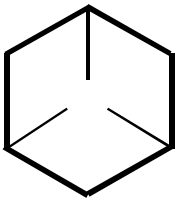

S.A.E. Grade 5

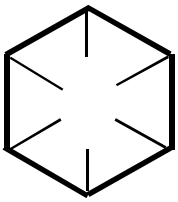

S.A.E. Grade 8

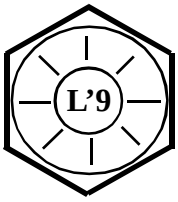

L'9

Other Bolts

Truss Head, grade 2

Carriage Bolt, grade 2
(unless marked as above)

Hex Nuts

Nuts with no markings are to be treated as S.A.E. Grade 2

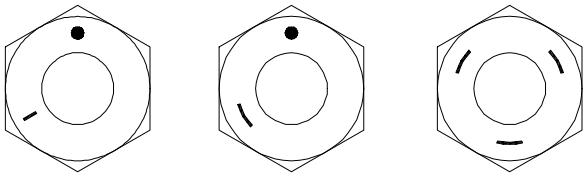

S.A.E. Grade 5

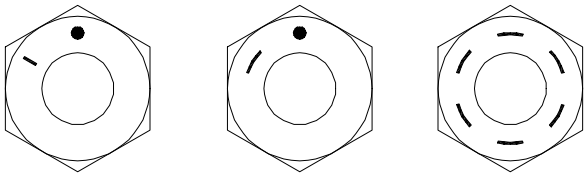

S.A.E. Grade 8

Hex Lock Nuts (stover)

Lock nuts use a letter to indicate the grade of the nut. Grade A' locknuts would be the equivelent of Grade '2' hex nuts, Grade 'B' as Grade '5' and Grade 'C' as Grade '8'.

NOTE: Nuts with no markings are to be treated as S.A.E. Grade A

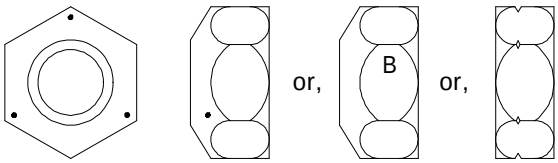

S.A.E. Grade B

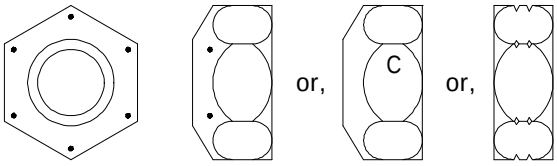

S.A.E. Grade C

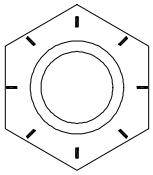

Grade L'9

Other Nuts

Other nuts used by Taylor-Dunn® should be treated as S.A.E. grade A

Suggested Torque Values (non-critical hardware)

Diameter and TPI	Grade 2 Tightening Torque (ft-lb)	Grade 5 Tightening Torque (ft-lb)	Grade 8 Tightening Torque (ft-lb)	L'9 Tightening Torque (ft-lb)
1/4-20	4-7	7-10	10-14	11
1/4-28	5-8	8-12	11-16	12
5/16-18	9-14	14-21	20-29	22
5/16-24	10-15	15-23	22-33	25
3/8-16	16-24	25-37	35-52	40
3/8-24	18-27	28-42	40-59	45
7/16-14	26-38	40-59	56-84	65
7/16-20	29-43	44-66	62-93	70
1/2-13	39-59	60-90	85-128	95
1/2-20	44-66	68-102	96-144	110
9/16-12	56-84	87-131	123-184	140
9/16-18	63-94	97-146	137-206	160
5/8-11	78-117	120-180	170-254	195
5/8-18	88-132	136-204	192-288	225
3/4-10	138-207	213-319	301-451	350
3/4-16	154-231	238-357	336-504	390
7/8-9	222-334	344-515	485-728	565
7/8-14	245-367	379-568	534-802	625
1-8	333-500	515-773	727-1091	850
1-14	373-560	577-866	815-1222	930
1.125-7	472-708	635-953	1030-1545	1700
1.125-12	530-794	713-1069	1156-1733	1850
1.25-7	666-999	896-1344	1454-2180	2950
1.25-12	738-1107	993-1489	1610-2414	3330

Suggested Torque Values (critical hardware)

Torque Table

Group	Description	Torque Range Ft-Lbs	In-Lbs	Nm
Brakes				
	Brake bolt (disc brake body)	11 - 11	132 - 132	15 - 15
	Brake line tube nut fittings	12 - 13	144 - 156	16.3 - 17.7
	Brake spider bolts (Dana 160mm hyd brakes)	25 - 35	300 - 420	34 - 47.6
	Brake spider bolts (Dana 160mm mech brakes)	15 - 19	180 - 228	20.4 - 25.8
	Brake spider bolts (Dana 7x1-3/4 brakes)	16 - 20	192 - 240	21.8 - 27.2
Electrical				
	Battery terminals	8 - 9	96 - 108	10.9 - 12.2
Front Axle				
	Front spindle nut	-	-	-
	Note: Refer to maintenance section in the service manual			
	King pin	-	-	-
	Note: Refer to maintenance section in the service manual			
Rear Axle/Transmission				
	3rd member Gear case cover (GT drive)	45 - 50	540 - 600	61.2 - 68
	Axle bolt (GT drive)	275 - 275	3300 - 3300	374 - 374
	Axle hub nut (Dana)	95 - 115	1140 - 1380	129.2 - 156.4
	Axle tube to center section (Dana F-N-R)	25 - 35	300 - 420	34 - 47.6
	Carrier cap bolts (Dana)	100 - 120	1200 - 1440	136 - 163.2
	Differential Cover plate (Dana H12)	18 - 25	216 - 300	24.5 - 34
	Drain plug (Dana H12)	25 - 40	300 - 480	34 - 54.4
	Drain plug (GT drive)	21 - 25	252 - 300	28.6 - 34
	Gear case to 3rd member (GT drive)	18 - 20	216 - 240	24.5 - 27.2
	Motor mounting (GT/Dana)	6.5 - 7	78 - 84	8.8 - 9.5
	Pinion nut (F2/F3)	175 - 175	2100 - 2100	238 - 238
	Pinion nut (GT drive)	154 - 169	1848 - 2028	209.4 - 229.8
	Ring gear (Dana)	35 - 45	420 - 540	47.6 - 61.2
	Wheel lug nut	75 - 90	900 - 1080	102 - 122.4
Steering				
	Ball joint clamp	28 - 32	336 - 384	38.1 - 43.5
	Ball joint nut	40 - 45	480 - 540	54.4 - 61.2
	Pitman nut (18-308-21 steering gear)	75 - 100	900 - 1200	102 - 136
	Pitman nut (18-308-25 steering gear)	181 - 217	2172 - 2604	246.2 - 295.1
	Rod end nut	20 - 25	240 - 300	27.2 - 34
	Steering shaft pinch bolt	24 - 26	288 - 312	32.6 - 35.4
	Steering wheel nut (18-308-21 steering gear)	28 - 32	336 - 384	38.1 - 43.5
	Steering wheel nut (18-308-25 steering gear)	72 - 86	864 - 1032	97.9 - 117
Suspension				
	Leaf spring hangers	-	-	-
	Note: Refer to maintenance section in the service manual			

APPENDIX C: BRAKE LINING HANDLING PRECAUTIONS

⚠WARNING

Taylor-Dunn does not currently supply asbestos fiber-brake pads/shoes with any vehicle. However, there is the possibility that the original brake pads/shoes were replaced with aftermarket pads/shoes containing asbestos. Since this possibility does exist, the brake pads/shoes should be handled as if they do contain asbestos.

Never use compressed air or dry brush to clean the brake assemblies. Use an OSHA approved vacuum cleaner or any alternate method approved by OSHA to minimize the hazard caused by airborne asbestos fibers and brake dust.

Do not grind, sand, break, or chisel the brake pads/shoes, as this will cause unnecessary dust, possibly releasing asbestos fibers in the air.

Always wear protective clothing and a respirator when working on the brake pads/shoes or their associated components.

Inhaled asbestos fibers have been found to cause cancer and respiratory diseases.

Do not drive the vehicle if any worn or broken part is detected in any part of the brake system. The cause of the damage must be repaired immediately.

APPENDIX D: MANUFACTURER PART NUMBER CROSS REFERENCE

Component:	Vendor Part Number:	Vendor Name:
17-108-00	2X569 (3PER PKG)	ENERSYS INC
18-308-21	7842236	WAT DIRECCIONES, C/O RIC
19-005-00	3162	SPEED WAREHOUSE
19-005-17	677	SPEED WAREHOUSE
32-204-10	EP-1416-20	KAMAN INDUSTRIAL TECHNOLOGIES
32-240-41	06FDU08	GARLOCK BEARINGS
32-249-01	9002G	ENGERY SUSPENSION
32-249-02	15.10.05.39 SLEEVE	ENGERY SUSPENSION
41-154-35	41-154-35	EASTWEST UNITED GROUP INC
41-351-30	82396	AUSCO PRODUCTS INC
41-351-78	81876	AUSCO PRODUCTS INC
41-351-79	81877	AUSCO PRODUCTS INC
44-440-84	3.28684.3	GRAZIANO TRANSMISSION SPA
45-304-00	NAT 482126	HUNTINGTON BEACH DODGE INC
500128	C/H 956-3124	TIGER MFG CORP
502136	FCS-1	T-H MARINE SUPPLIES INC
502142	B491R	PETERSON MANUFACTURING CO
502143	B491A	PETERSON MANUFACTURING CO
503479	503479	TIGER MFG CORP
71-039-02	VJDAS00B-AZC00-000	WES-GARDE COMPONENTS
71-039-21	VHP	WES-GARDE COMPONENTS
71-110-00	CH# 8629	COLE HERSEE CO
71-120-33	870-9231	ALLIED ELECTRONICS
71-210-11	13220825/2028-551A	CURTIS INSTRUMENTS INC
71-210-13	13220672	CURTIS INSTRUMENTS INC
71-303-01	0332209150	WES-GARDE COMPONENTS
72-0022-04	84045	HAMSAR DIVERSCO INC
72-035-01	84070	HAMSAR DIVERSCO INC
73-004-20	7225221	SYSTEMS MATERIAL HANDLING
73-005-04	64F335	PASSIVE COMPONENTS INC
73-012-30	622/11088	SEVCON INC
74-010-20	17472717	CURTIS INSTRUMENTS INC
76-020-25	SY996G1	SYSTEMS MATERIAL HANDLING
77-059-10	24-E85D-9	ENERSYS INC
78-010-30	15600-06-21	TRASCOM USA INC
78-307-25	280-CR10-25	MOUSER ELECTRONICS
79-356-10	D1-24-600	ENERSYS INC
79-356-11	D3G-24-680	ENERSYS INC
79-356-12	EF1-24-600D	ENERSYS INC
79-356-13	EF3-24-600D	ENERSYS INC
79-820-03	221-10-0-00 ATC	COOPER BUSSMANN INC
79-840-00	121A10-B2P-HA	COOPER BUSSMANN INC
79-840-20	121A20-B20-HA	COOPER BUSSMANN INC
79-844-20	7855-7-200	TEXAS INSTRUMENTS INC
80-011-00	LM67048	TIMKEN CORP
80-309-00	T88	TIMKEN CORP

Component:	Vendor Part Number:	Vendor Name:
80-400-10	ASF107-1D	FREEWAY CORPORATION
80-505-20	RW-902-2834	GREEN BEARING
80-505-30	RW9022834NOGS	GREEN BEARING
80-714-05	9452K387	MCMASTER-CARR SUPPLY
85-195-00	GSN12250150KJJ	SERVICE PLUS DISTRIBUTORS INC
85-195-01	BS-1005	SERVICE PLUS DISTRIBUTORS INC
85-195-02	SC-1006	ASSOCIATED SPRING RAYMOND
86-007-00	61022240X	ARVIN RIDE CONTROL PRODUCTS
86-501-98	86-501-98	JOSEPH INDUSTRIES INC
86-501-99	98-200-00	JOSEPH INDUSTRIES INC
86-510-00	C5469-H	MASON FORGE & DIE INC
86-521-98	PML-10 G	ALINABAL INC
86-521-99	PM 10G	ALINABAL INC
86-522-00	RM-10X5	ALINABAL INC
89-060-11	95327A535	MCMASTER-CARR SUPPLY
89-080-16	91280A526	EXCELL ENG INC
89-113-30	M1230D9338	EXCELL ENG INC
89-113-60	M12D127B	EXCELL ENG INC
90-160-60	126288	GRAMMER INC
90-160-70	127266	GRAMMER INC
92-104-01	1428600	TITAN TIRE CORPORATION
92-104-10	CCF-2-3/8-10-14	PROTECTIVE CLOSURES CO INC
94-318-80	0061L SPECIFY #	CALAWAY SYSTEMS INC
94-331-10	0024	CALAWAY SYSTEMS INC
94-421-34	MOLY60 08734-001	PARTS PLUS
95-512-00	12-1132	DETMAR CORPERATION
96-123-45	4P829	GRAINGER INC
96-245-05	91255A624	MCMASTER-CARR SUPPLY
96-245-20	010032	EXCELL ENG INC
96-329-10	0508100	TITAN TIRE CORPORATION
96-812-21	8914T15	MCMASTER-CARR SUPPLY
96-812-22	3465T12	MCMASTER-CARR SUPPLY
97-169-10	5610-561-02	EXCELL ENG INC
97-211-15	94850A120	MCMASTER-CARR SUPPLY
97-211-20	LUGS-142059 PG	EXCELL ENG INC
97-211-30	94850A170	EXCELL ENG INC
97-236-00	1468900	EXCELL ENG INC
98-451-20	STICKERTITE 1/8X1/2	ALLEGIS CORP
98-753-12	9-9121G	ENGERY SUSPENSION
98-753-15	15128501	ENGERY SUSPENSION
99-559-00	7900	ENGERY SUSPENSION
99-564-00	702X3	DONALD DAVIS COMPANY
99-575-00	302X3	DONALD DAVIS COMPANY
99-575-32	1443	DONALD DAVIS COMPANY
99-588-00	F6446-001	UCF AMERICA INC
99-588-01	34571	EXCELL ENG INC
99-591-00	652X3	DONALD DAVIS COMPANY

APPENDIX E: SUGGESTED SPARE PARTS LIST

Component	*Description*	**Qty*
12-115-10	HUB,W/DISC,5 STUD,1 IN BRG	2
18-308-21	STEERING GEAR,SAGINAW,7842236>	1
32-207-10	BUSHING,3/8X5/8X1LG,RUBBER	4
32-214-50	BUSHING,LEAF SPRG,1/2ID	6
13-952-00	WHL&TIRE,ASSY,15.5X6X10,5 BOLT	4
41-490-11	BRAKE ROTOR, 36 TOOTH SPLINE	1
45-304-00	SEAL,1.25 ID,1.983 OD.395W	1
500128	SWITCH,IGNITION,KEYLESS	1
502136	SWITCH, FOOT/HORN	1
502142	REFLECTOR, RED	4
502143	REFLECTOR, AMBER	4
62-016-69	ASY,CONTR PANEL, AC,550A,C4-26	1
62-033-48	ACCELERATOR,ASY,OUTPT24/36/48V	1
70-059-40	MOTOR,AC,S1-6.8KW,19T,E.BRAKE>	1
71-039-02	SWITCH,CONTURA,F/R SELECTOR	1
71-102-25	SWITCH,GRAMMER SEAT W/RECEPT.	1
71-110-00	SWITCH,BRAKE LIGHT,HYD.	2
71-120-33	SWITCH, 3 POLE, DOUBLE THROW	1
71-210-13	CONTACTOR,ISO,SW200A,24V,AUX C	1
71-303-01	RELAY,SPDT,12V COIL,20/30A	1
72-035-01	HEADLITE ASSY	1
72-022-04	TAIL LIGHT, STOP,TURN,TAIL,BU	2
73-004-20	HORN,12V,SHORT MOUNT,PWR PANEL	1
73-005-04	ALARM,PULSE,6-16VDC,80-95DB	1
73-012-30	DC-DC CONV,36-48V,13.4V,300W	1
76-020-25	CONNECTOR, SB CABLE CLAMP	1
79-820-03	CIRCUIT BREAKER,ATC,10 AMP	2
79-840-00	CIRCUIT BREAKER,10 AMP,AUTO	1
79-840-20	CIRCUIT BREAKER,20A AUTO-RESET	2
79-844-20	CIR BRKR,200A,AUTO RESET	1
80-011-00	1 IN. ID TAPERED BRG	3
80-309-00	7/8 IN. THRUST BRG	2
80-400-10	3/4 IN. SEALED BALL BRG	2
80-505-20	BALL BRG,RR AXLE,2.83OD,1.53ID	1
80-505-30	BEARING, BALL, RRAXL, NO SEALS	1
85-142-00	SPRING, COMP, 2.59 OD X 6.25	2
85-195-00	SPRING,GAS CHARGED,BALL ENDS>	2
85-250-00	SPRING,1-1/16 OD X 3-5/8	1
85-295-00	SPRING EXTENSION,ACCEL	1
86-007-00	SHOCK ABSORBER, 8.375 EYE-EYE	2
86-501-98	BALL JOINT,F1 & P2,LEFT,W/ZERK	3
86-501-99	BALL JOINT,F1& P2,RIGHT,W/ZERK	3
86-521-98	ROD END,5/8,MALE,LEFT	1
86-521-99	ROD END,5/8,MALE,RIGHT	1
86-522-00	ROD END,CMS,5/8,MALE,RIGHT,HD	4
94-421-34	GREASE, 60% MOLY PASTE, 3 OZ	**
94-422-10	GREASE,ELECTRICAL,DOW CORN'G#4	**
94-422-21	HEATSINK 340 PASTE,13.5OZ	**

** - Quantity indicated is what is used on one vehicle. Quantity to be kept on hand as spare parts to be determined by the end user taking into account the total number of vehicles in service.*

*** - Quantity required varies or is not defined.*

APPENDIX F: REVISION HISTORY

Revision: A 9/15/2008

Section	Page	Description
	0	Initial Release

Revision: B 7/8/2009

Section	Page	Description
Parts	4	Add thread lock compound note
Parts	5	Add 18-426-01, replaces 18-426-00
Parts	31	Item 8: 75-153-01-GRAY was 75-153-01
Parts	44	Item 4: 76-020-11 was 76-020-10
Parts	44	Illustration: Change blue to gray connector
Steering		Add procedure: Replace the Steering Gear S/N Starting 180286
Steering		Add procedure: Remove the Steering Column S/N Starting 180286
Steering	6	Change title: Add serial number range
Steering	7	Change title: Add serial number range
TOC		Update due to changes in Steering Section

Revision: C 3/19/2010

Section	Page	Description
Appendix	11	Add revision details
Brakes	4	Add service limits for motor brake
Cover		Replace pic of vehicle with FedEx vehicle
Cover		Update revsion letter
Operator	4	Replace Warning with revised warning from P8
Operator	4	Remove double colon "::" in both notes
Operator	4	Motion Alarm: Replace "key" with "start"
Operator	6	Replace 2nd warning with revised warning from P8
Operator	6	Replace "key" with "start"
Operator	8	Remove reference to Low Speed mode
Operator	8	Starting #3: Replace with "Turn the start switch to the “ON” position."
Operator	8	Delete 1st warning (replaced with 2nd revised warning)
Operator	8	Revise 2nd warning to include start switch
Operator	9	Change "key switch" to "start switch"
Operator	9	Revove reference to park brake

Revision: D 3/26/2010

Section	Page	Description
Appendix	11	Update revision history
Cover		Change format of revision text (FedEx request)

Revision: E 9/23/2011

Section	Page	Description
Cover		Remove FedEx Spec #'s (OK per Cindy G. 9/23/2011)
PDF		Bookmark "MC-425-05" should be "MC-425-06"

Taylor-Dunn® Mfg.
2114 W. Ball Rd.
Anaheim, CA 92804
(800)-688-8680
(714) 956-4040
(FAX) (714) 956-0504

Mailing Address:
P.O. Box 4240
Anaheim, California 92803

Visit our Website:
www.taylor-dunn.com